Gregory's

No 197

LASER KA-KB
METEOR GA-GB

SERVICE AND REPAIR MANUAL

MODELS

SEDAN
L–5 DOOR
GL–5 DOOR
GL–3 DOOR
1.3–1.5 LITRE
GHIA–5 DOOR

SPORT
S–3 DOOR
Except SS

METEOR
GL 4 DOOR
GHIA 4 DOOR

1981/Sept1985

PRODUCED BY GREGORY'S SCIENTIFIC PUBLICATIONS

GREGORY'S AUTOMOTIVE PUBLICATIONS
SERVICE AND REPAIR MANUAL No. 197

FORD
LASER – METEOR

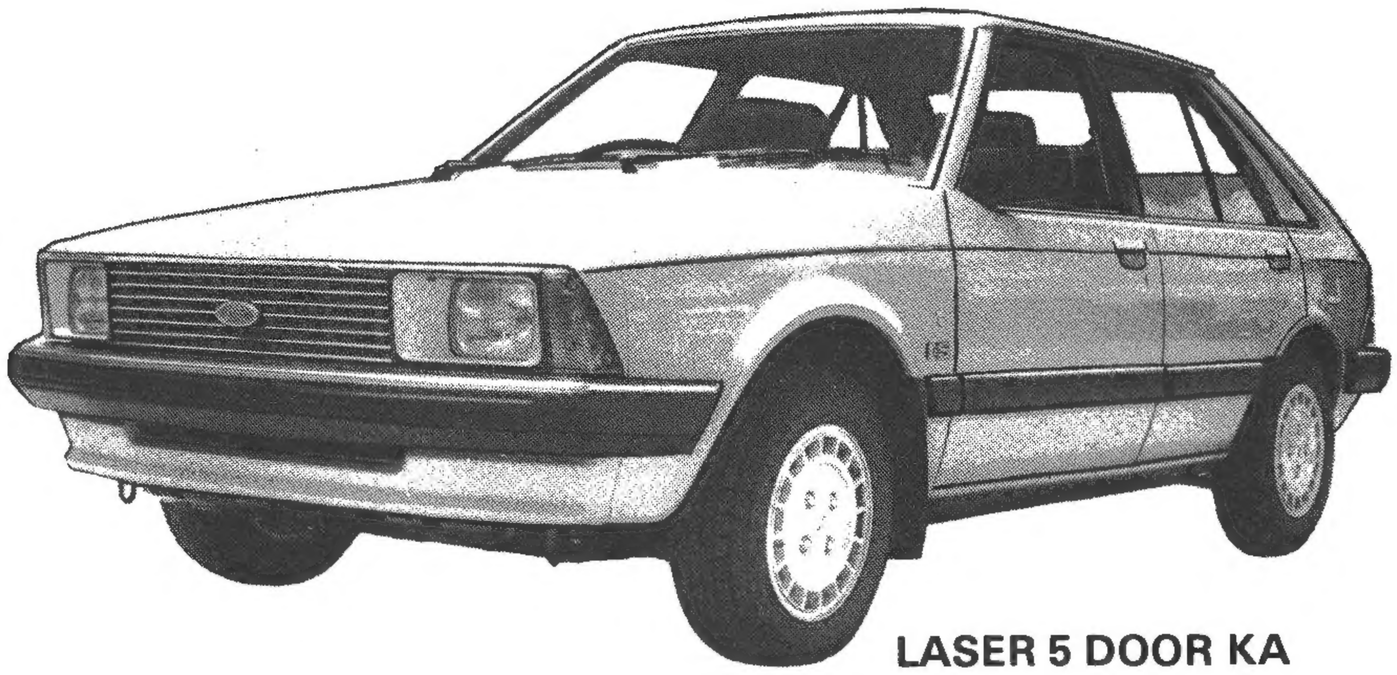

LASER 5 DOOR KA

LASER 5 DOOR KB

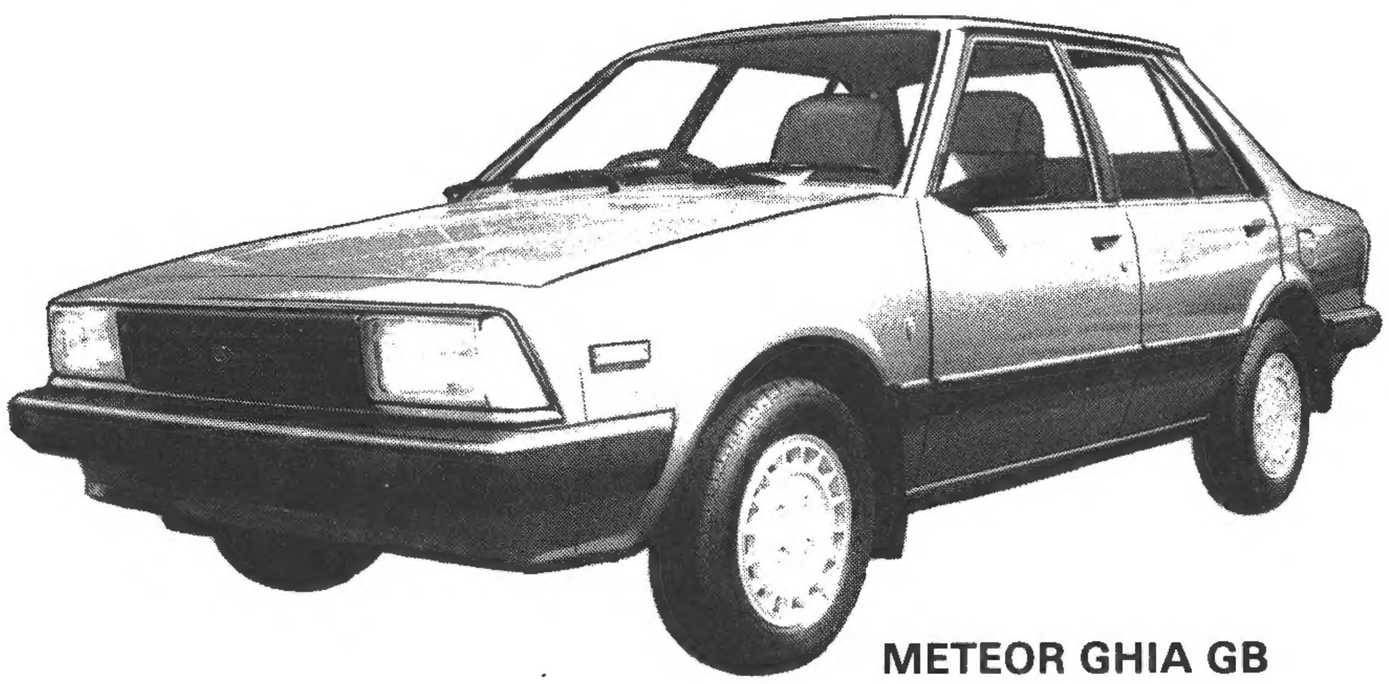

METEOR GHIA GB

GREGORY'S AUTOMOTIVE PUBLICATIONS
SERVICE AND REPAIR MANUAL No. 197

FORD
KA–KB LASER
1.3 – 1.5 Litre

GA–GB METEOR
1.5 Litre

1981 – 1985

The information in this manual is derived from the latest models available for our workshop research, and other available sources at the times of preparing the editions which first covered the models listed above. While every effort has been made in preparing later editions to ensure that subsequent modifications by the manufacturer have been included, vehicles and parts vary in manufacture, sometimes even from specifications published by the manufacturer. Accordingly, no guarantee or warranty is given that all such modifications are included in this manual.

While every precaution is taken to ensure the accuracy of the contents, no responsibility can be accepted for any misinterpretation or misapplication of the repair procedures described nor, apart from any warranties or conditions which might be implied by the Trade Practices Act and similar State and Territory Laws, can any liability be accepted for any errors or omissions in the text and/or illustrations.

GREGORY'S AUTOMOTIVE PUBLICATIONS
SYDNEY

GREGORY'S AUTOMOTIVE PUBLICATIONS
Service and Repair Manual No. 197

Published by
Gregory's Automotive Publications
a division of Universal Press Pty Ltd
Sydney, Australia

Edited and photographed at the company's
Sydney editorial and research centre
1 Waterloo Road
Macquarie Park 2113
NSW
AUSTRALIA

Printed in Australia by
Lithocraft Graphics

First Edition: © Gregory's Automotive Publications a division of Universal Press Pty Ltd — August 1982
First Reprint: August 1983

Second Edition: © Gregory's Automotive Publications a division of Universal Press Pty Ltd — January 1985

First Reprint:	December 1985	Sixth Reprint:	December 1988
Second Reprint:	August 1986	Seventh Reprint:	May 1989
Third Reprint:	February 1987	Eighth Reprint:	December 1989
Fourth Reprint:	September 1987	Ninth Reprint:	July 1990
Fifth Reprint:	January 1988	Tenth Reprint:	February 1991

10

ISSN 0727 6117
ISBN 0 855 66531 9

All rights reserved. Gregory's Automotive Publications, a division of Universal Press Pty Ltd, is the owner of the copyright subsisting in this publication. Other than permitted by the Copyright Act, no part of this publication may be reproduced, copied or transmitted, in any form or by any means (electronic, mechanical, microcopying, photocopying, recording, storage in a retrieval system or otherwise), without the prior written permission of Gregory's Automotive Publications, a division of Universal Press Pty Ltd. Universal Press Pty Ltd will vigorously pursue any breach of its copyright.

Use of the material in this publication is protected by copyright. Access to material may be negotiable upon request. Please contact Gregory's Automotive Publications on (02) 857 3700.

CONTENTS

INTRODUCTION 7

TOOLS – EQUIPMENT – SAFETY 8
Tools and equipment 8
Safety 10

LUBRICATION AND MAINTENANCE 11
Specifications 11
How to grease and oil change 11
Service schedule 13
Lubrication chart 16
Maintenance chart 17

WHEELS & TYRES 18
How to change a road wheel 18
Tyre wear trouble shooting 19

ENGINE TUNE-UP 21
Tune-up specifications 21
Tune-up operations 21

ROADSIDE TROUBLE SHOOTING 28
Trouble shooting 28
To check ignition and electrical systems 28
To check fuel system 29
To check the mechanical system 31

ENGINE 32
Specifications 32
Engine mechanical trouble shooting 33
Description 36
Engine assembly 36
Rocker arms and shafts assembly 38
Camshaft 40
Manifolds 41
Cylinder head 43
Engine sump 45
Oil pump 45
Timing cover, chain and sprockets 46
Pistons, connecting rods and cylinder bores 49
Crankshaft and main bearings 52
Flywheel/drive plate 53
Engine mountings 54
Exhaust system 55

COOLING SYSTEM 57
Specifications 57
Cooling system trouble shooting 57
Description 58
Radiator 58
Thermostat 60
Water pump 61
Welch plugs 62
Drive belt 63
Heater unit and controls 63

FUEL SYSTEM 66
Specifications 66
Fuel system trouble shooting 66
Air cleaner 67
Carburettor 68
Fuel pump 73
Fuel filter 74
Fuel tank 74
Accelerator cable 74

CLUTCH 76
Specifications 76
Clutch trouble shooting 76
Description 77
Clutch unit and release mechanism 77
Clutch pedal 79
Clutch cable 79
Clutch adjustments 80

MANUAL TRANSMISSION AND DRIVE SHAFTS 81
Specifications 81
Manual transmission and drive shaft trouble shooting 81
Description 83
Manual transmission 83
Drive shafts 85

AUTOMATIC TRANSMISSION 88
Specifications 88
Automatic transmission trouble shooting 88
Description 88
Transmission fluid 89
Brake band 89
Transmission selector linkage 90
Neutral safety switch 90
Kickdown switch and solenoid 91
Transmission assembly 91

STEERING 93
Specifications 93
Steering trouble shooting 93
Description 94
Steering gear assembly 94
Steering column assembly 97
Intermediate shaft 98

FRONT SUSPENSION 99
Specifications 99
Front suspension trouble shooting 99
Description 100
Steering knuckle and hub assembly 100
Suspension unit 101
Ball joint 102
Control arm 102
Stabiliser bar 103
Suspension and steering angles 104

REAR SUSPENSION 106
Specifications 106
Rear suspension trouble shooting 106
Description 107
Rear hub 107
Suspension unit and stub axle 108
Trailing arm 109
Control arms 110
Stabiliser bar 111

BRAKES 112
Specifications 112
Brakes trouble shooting 112
Description 114
Master cylinder 114
Brake servo unit 116
Front brake assembly 117
Rear brake assembly 119
Handbrake assembly 121
Brake pedal 122

Pressure proportioning valve 123
Hydraulic system 123
ELECTRICAL SYSTEM 125
Specifications 125
Battery and charging system trouble shooting 125
Battery and starting system trouble shooting 126
Lighting system trouble shooting 126
Turn signal lamp trouble shooting 127
Ignition system trouble shooting 128
Test equipment and some applications 129
Battery 130
Alternator 130
Starter motor 135
Distributor 137
Switches and controls 139
Speedometer cable 141
Instrument cluster 141
Lamp units 142
Windscreen wiper 144
Rear window wiper 145
Fuses and fusible links 145
How to wire up a trailer 146
Wiring diagram 148
BODY 150
Windscreen and rear glass 150
Front doors 150
Rear doors 152
Rear side glass — 3 door models 154
Engine bonnet 154
Luggage compartment lid 154
Radiator grille 155
Centre console 156
Vehicle cleaning 156
EMISSION CONTROL 158
Introduction 158
Crankcase ventilation system 158
Exhaust control system 159
Exhaust gas recirculation system (EGR) 161
Evaporative control system 161
SUPPLEMENT 163
KB-LASER AND GA, GB METEOR 163
ENGINE TUNE-UP 164
Tune up specifications 164
FUEL SYSTEM 165
Air cleaner 165
BRAKES 166
Specifications 166
Description 166
Master cylinder 166
Brake servo unit 169
ELECTRICAL SYSTEM 170
Specifications 170
Starter motor 170
Lamp units 171
Solid state ignition system 173
BODY 176
Meteor luggage compartment 176
CONVERSION TABLES 177
GLOSSARY OF NAMES AND TERMS 179

INTRODUCTION

This workshop manual has been researched and written by automotive engineers for the practically-minded car owner who wishes to maintain his vehicle in a safe, reliable and serviceable condition and, at the same time, reduce running and maintenance costs.

A vehicle of the type covered by this manual was taken into our workshop where the repair methods described were proven in practice. To ensure that the reader can readily identify the components and operations described in the text, detailed photographs and illustrations were produced during the workshop research for inclusion throughout this manual.

Each section contains step by step procedures for the removal and installation of components and, where applicable, detailed instructions for their testing, overhaul and adjustment. For the technically minded, comprehensive specifications are given at the beginning of each section.

The importance of regular lubrication and maintenance is stressed in an easy to follow service schedule. Performing services at the intervals specified also gives the opportunity of identifying any minor faults before they get worse. A cracked fan belt, deteriorated water hose or faulty tyre is better dealt with in the convenience of your own garage rather than risk an expensive and inconvenient breakdown.

Particular emphasis is also placed on the value of trouble shooting as the identification of the trouble source can often be more of a problem than the cure. If used correctly, the information included on the majority of trouble causes and remedies should greatly assist in the saving of the time and possible unnecessary expenditure.

This manual will bring within the scope of many readers numerous tasks on the vehicle which can be tackled with confidence. The cost of the manual may well be recovered on the first occasion it is put to use, and the personal satisfaction of a job well done is the inevitable bonus.

Inexperienced operators should not attempt to carry out a particular service operation before completely reading the appropriate section, or other sections which may be referred to, in the manual.

1. TOOLS AND EQUIPMENT

When servicing the modern motor vehicle, special tools are sometimes essential for overhaul and adjustment procedures on certain components. These special tools can be expensive and often require specialised knowledge to operate them, in which case it is more practical to take the vehicle or component to your authorised dealer for repair. Where possible the use of special tools is avoided in this manual and basic or substitute tools, which are described in the text, are used instead. Should it not be practical to carry out an operation without special equipment, then the reader is advised of this at the commencement of the operation.

To successfully carry out any form of mechanical repair work, adequate hand tools are essential. Do not be tempted to make do with old spanners, screwdrivers etc, that do not correctly fit the hardware on the vehicle, nor use new spanners of the wrong system such as A.F. on metric nuts and bolts. Besides damaging the hardware and/or 'rounding' the bolt heads and nuts, many a knuckle has been skinned by using inferior or incorrect tools.

The following list of basic tools, miscellaneous equipment and stores are suggested as being the initial requirements to enable the maintenance and repair work described in this manual to be carried out.

BASIC TOOL KIT

1 Set of open ended spanners.
1 Set of ring spanners.
1 Set of socket spanners.
1 Set of adjustable spanners.
1 Spark plug spanner.
1 Torque wrench.
Assorted bladed screwdrivers.
Assorted Philips screwdrivers.
1 Pair of ordinary pliers.
1 Pair of multigrip pliers.
1 Pair of vice grip pliers.
1 Pair of long nose pliers.
2 Pairs of circlip pliers.
1 Engineers hammer.
1 Set of pin punches.
1 Set of feeler gauges.
1 Set of magneto spanners.
1 Points file.

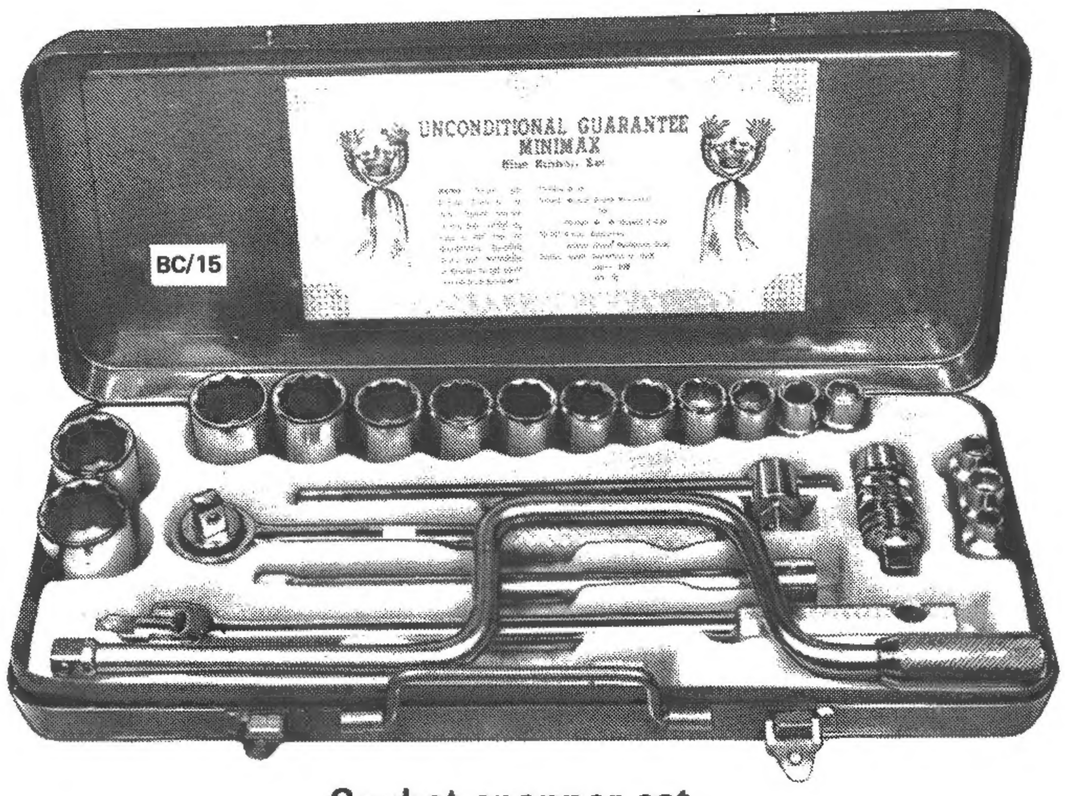

Socket spanner set.

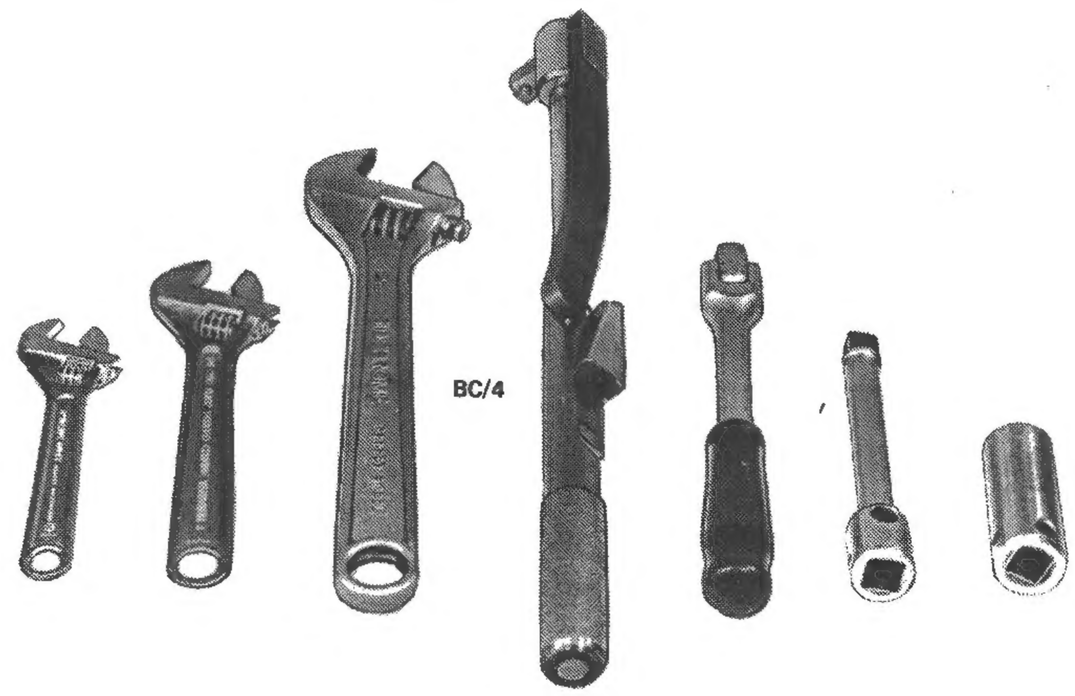

Adjustable spanners, torque wrench and spark plug socket spanner with socket extension and swivel bar.

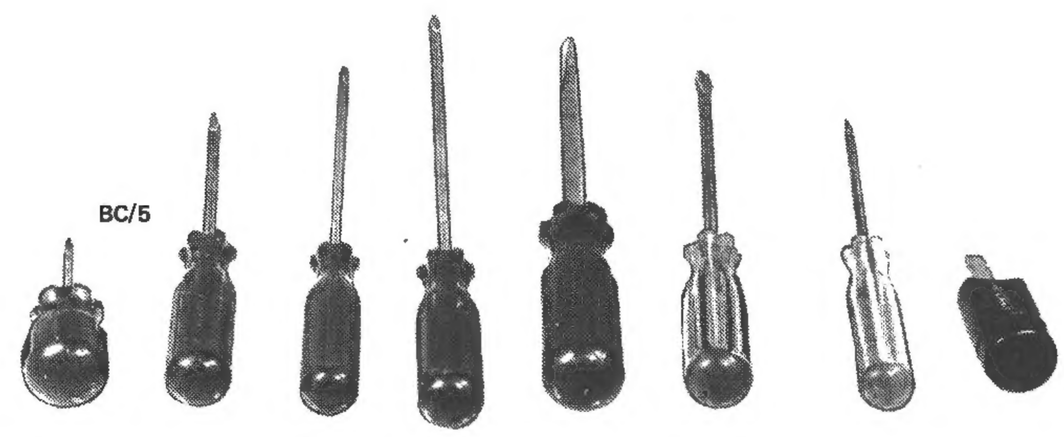

Assorted Philips and bladed screwdrivers.

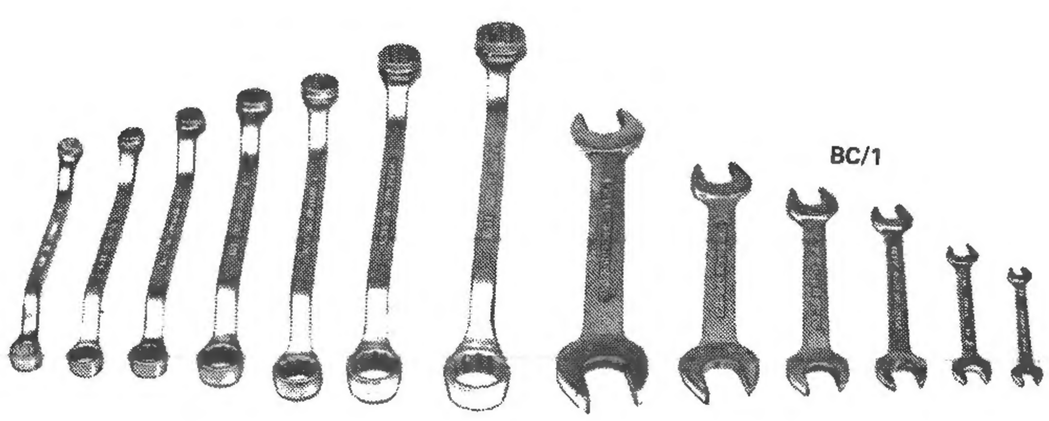

Ring and open ended spanners.

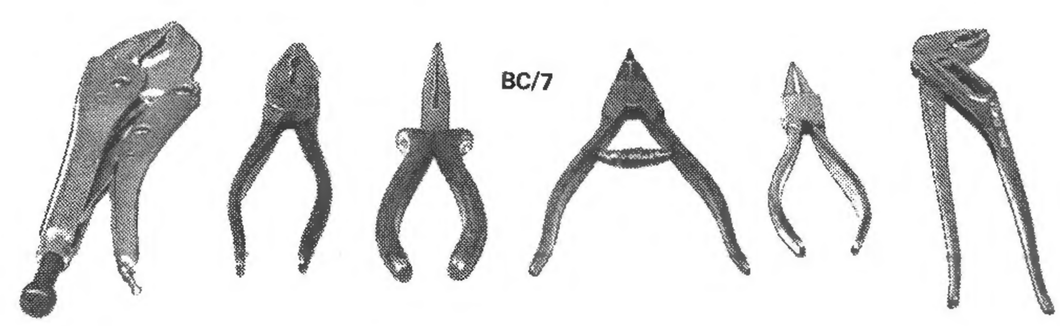

Vice grip pliers, ordinary pliers, long nose pliers, circlip pliers (expanding type), circlip pliers (contracting type) and multigrip pliers.

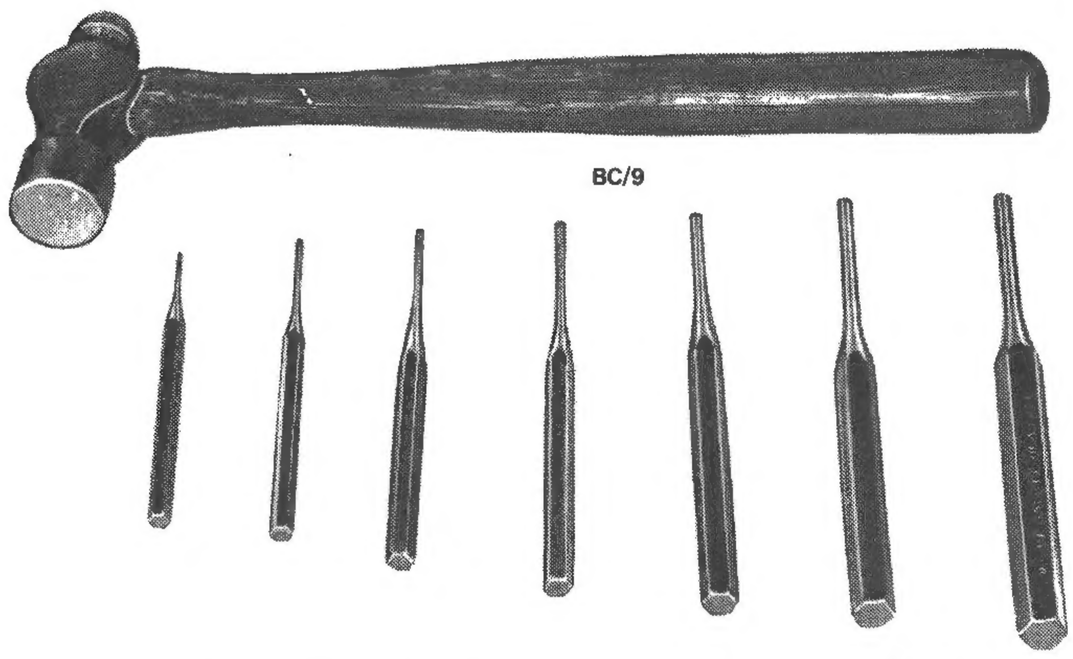

Engineers ball pein hammer and pin punch set.

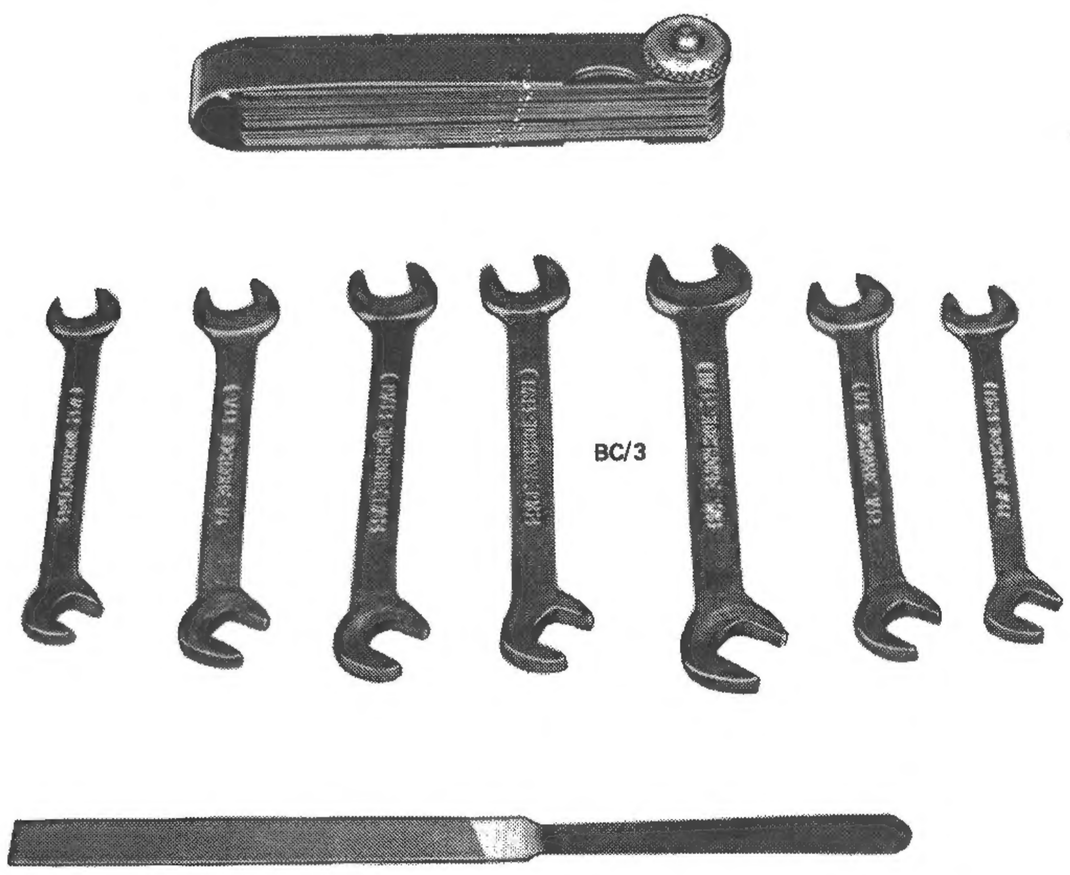

Points file, magneto spanners and feeler gauge set.

TOOL SELECTION AND CARE

As sensible selection of tools can greatly influence the ease and quality of work performed by the operator, it is good advice to purchase the highest quality of tools that can be afforded. Tools which bear the makers name are usually the best. The cheaper case hardened variety of tools should be avoided as once the case hardening is worn through it will be found that the tools are no longer serviceable. Hand tools with joints such as adjustable spanners and pliers should have no appreciable slack in the joints. There is nothing more annoying than to set a crescent spanner to a given nut and find that the jaw dimensions keep altering.

To ensure that all hand tools see out a normal working life tool care is also very important. After each job undertaken, all tools should be thoroughly washed in kerosene or some other type of cleaning agent and then wiped dry with a clean cloth.

When cleaning the tools ensure that all grit is removed, especially from the joints in pliers and adjustable spanners. If the tools are to be stored for any length of time it is also good policy to wipe them over with an oily cloth. Feeler gauges should be given particular attention and must be kept scrupulously clean at all times as grit on the blades will cause damage to the blades and inaccuracy when measuring. To prevent the feeler gauge blades from rusting and pitting through moisture the blades should be wiped over with an oily cloth after each use.

To prevent hand tools and other equipment from becoming mislayed and to ensure uncluttered working surroundings all hand tools should be stored in either a tool box or on a shadow board. If it is not intended to transport the tools then the latter method is recommended for the 'do-it-yourself' mechanic. Besides having all tools within easy reach, a visible check can be made of the shadow board at any time to see if any tools are missing.

MISCELLANEOUS EQUIPMENT AND STORES

1 Hydraulic jack.
1 Set of car ramps.
1 Set of chassis stands.
1 Hand grease gun with flexible attachment.
1 Oil can.
1 Oil gun.
1 Filter removing tool.
1 Oil recepticle and parts washing tin.
1 Funnel.
1 Wire brush.
1 Parts washing brush.
1 Tin of brake fluid.
1 Tin of engine oil.
1 Tin of transmission oil.
1 Tin of rear axle oil.
1 Tin of chassis grease.
1 Test lamp.
1 Dwell/Tach meter.
1 Timing light.
1 Ohmmeter.

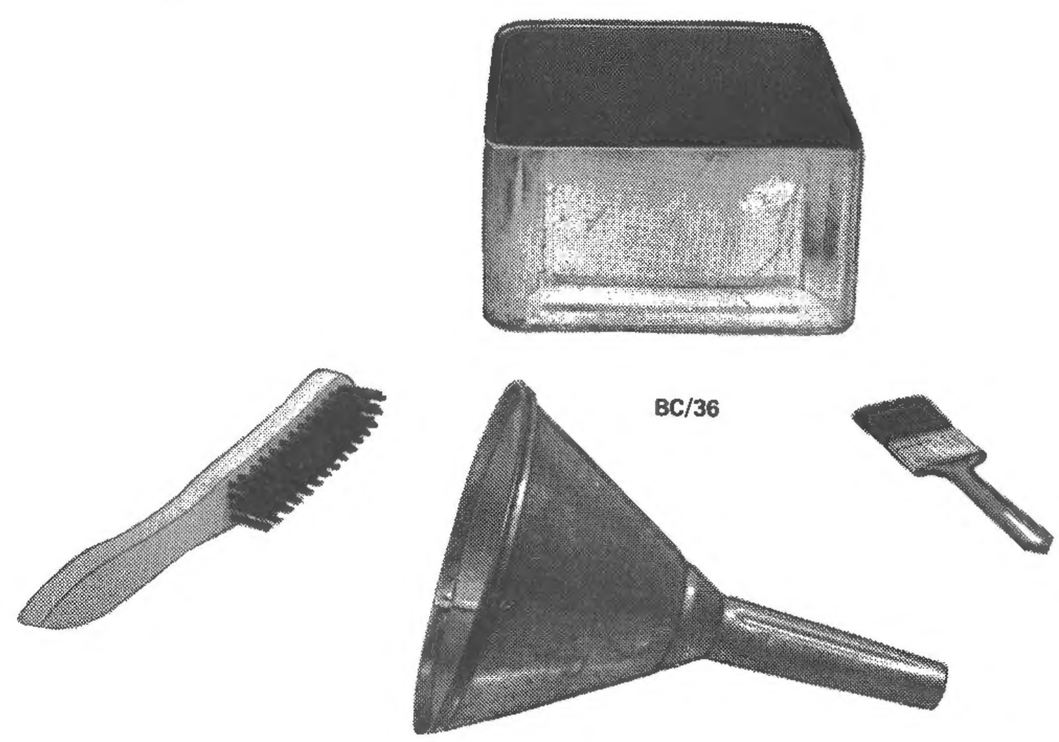

Wire brush, funnel and parts washing tin and brush.

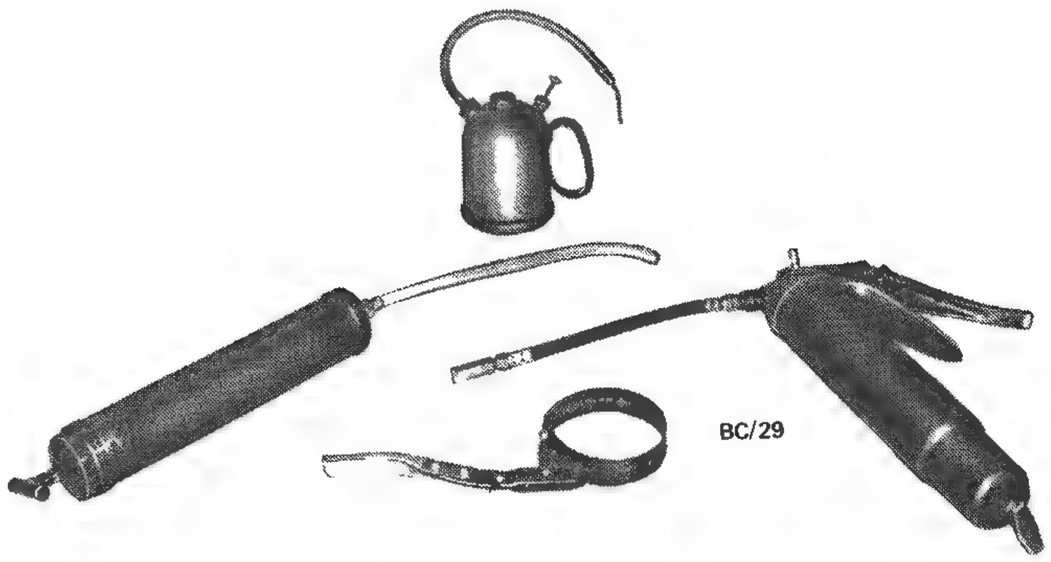

Oil gun, grease gun, oil can and filter removal tool.

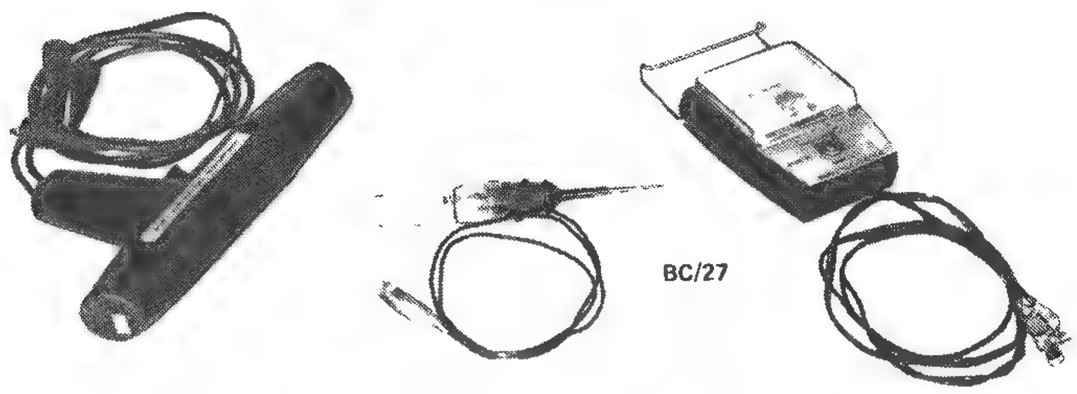

Timing light, test lamp and dwell/tach meter.

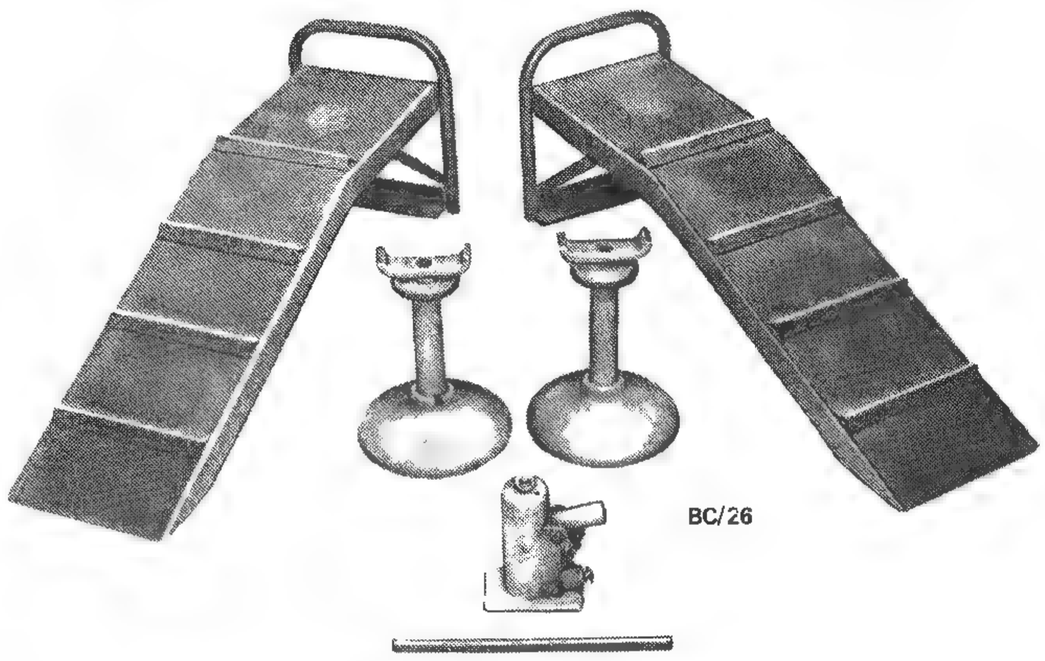

Car ramps, chassis stands and hydraulic jack.

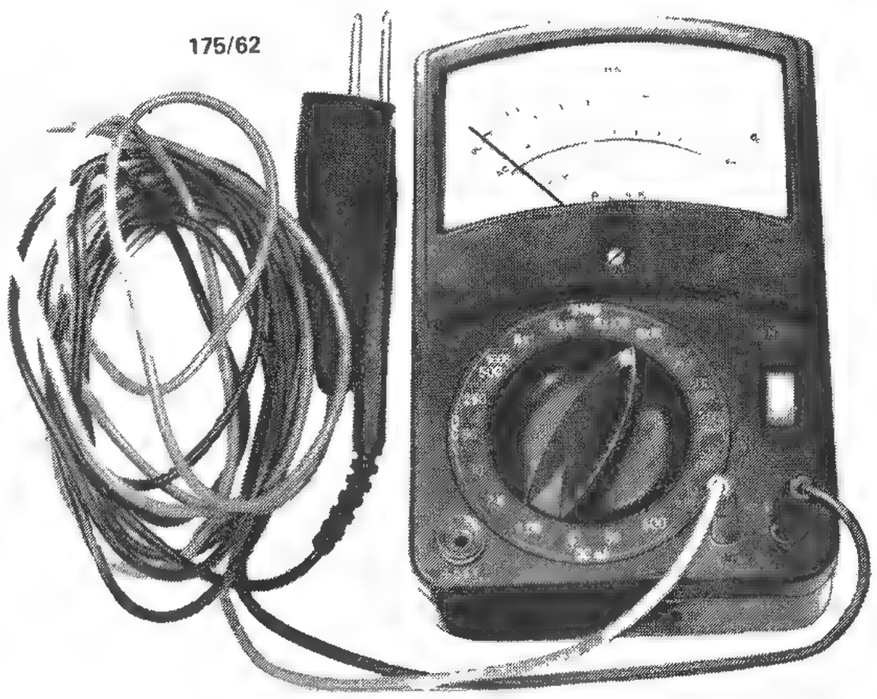

Ohmmeter (multimeter). An instrument for measuring electrical resistance.

Oils and greases are available in handy pack size for do-it-yourself lube jobs.

2. SAFETY

Never work *under* a vehicle which is supported only by the vehicle jack, bricks or similar materials as these are seldom stable. Always support the vehicle on chassis stands or use car ramps. Even in an emergency try to avoid jacking up the vehicle on soft or uneven ground.

When lifting either end of the vehicle ensure that the wheels remaining on the ground are fully chocked in both directions.

Avoid spilling oil or water around or under the working area, apart from the mess, you can easily lose your footing when exerting pressure on a particularly stubborn component.

When power tools are used make sure they are correctly fused and earthed with all connections and plugs tight and effectively insulated.

Always check that equipment being used for the lifting of heavy components such as engine and/or transmission is not exceeding its capacity and that ropes and slings are correctly secured and of adequate strength.

Every precaution should be taken when working on brake assemblies to avoid inhaling the brake dust which results from wear of the friction material. DO NOT attempt to remove dust by air pressure or vigorous brushing. A vacuum cleaner of either the domestic, or battery operated type designed for vehicles, with hose attachment is the most conveniently safe method of brake dust removal.

For the safety of the vehicle always disconnect the battery when carrying out any operation to the electrical or fuel systems. However, a battery should NOT be disconnected on a vehicle fitted with an alternator *when the engine is running,* or the alternator will be damaged.

The information in this manual is derived from the latest models available for our workshop research, and from other available sources at the time of writing. Any subsequent modifications will need to be taken into consideration by the operator.

While every precaution is taken to ensure the accuracy of the contents, onus can not be accepted for any misinterpretation of the described repair operations or for any errors or ommissions inadvertently made, or for any injury or damage no matter how caused.

SPECIFICATIONS

CAPACITY AND GRADE

Engine:
- Lubricant ..... SF 20W/50
- Sump capacity –
- With filter ..... 3.5 litres
- Without filter ..... 3.0 litres

*Cooling system:
- Capacity (including heater) ..... 5.5 litres

*Manual transmission:
- Lubricant ..... ATF type F
- Lubricant, 6/1981 to 10/1982 ..... SAE 80W
- Capacity ..... 3.2 litres

Automatic transmission:
- Lubricant ..... ATF type F
- Capacity ..... 5.7 litres

Wheel bearings:
- Lubricant ..... Lithium base grease

Brake fluid type ..... Dot 3

Fuel tank:
- Capacity ..... 42 litres

* Refer to decal in engine compartment

NOTE: Lubricant capacities shown are approximate only. The correct lubricant level should be checked at the filler opening or dipstick.

1. HOW TO GREASE AND OIL CHANGE

TOOLS, STORES AND EQUIPMENT REQUIRED

1 Set of metric ring spanners
1 Hydraulic jack
1 Set of car ramps
1 Set of chassis stands
1 Oil can
1 Oil gun
1 Filter removal tool
1 Oil receptacle and parts washing tin
1 Funnel
1 Wire brush
1 Parts washing brush
1 Tin of brake fluid
1 Tin of engine oil
1 Tin of transmission oil
1 Stick of dry lube

NOTE: All lubricant capacities and grades for the various assemblies can be obtained by referring to the Specifications.

TO DO THE JOB

(1) Run the front of the vehicle onto the car ramps and stop the engine.

(2) Raise the rear of the vehicle with the jack and place chassis stands under the rear jacking points.

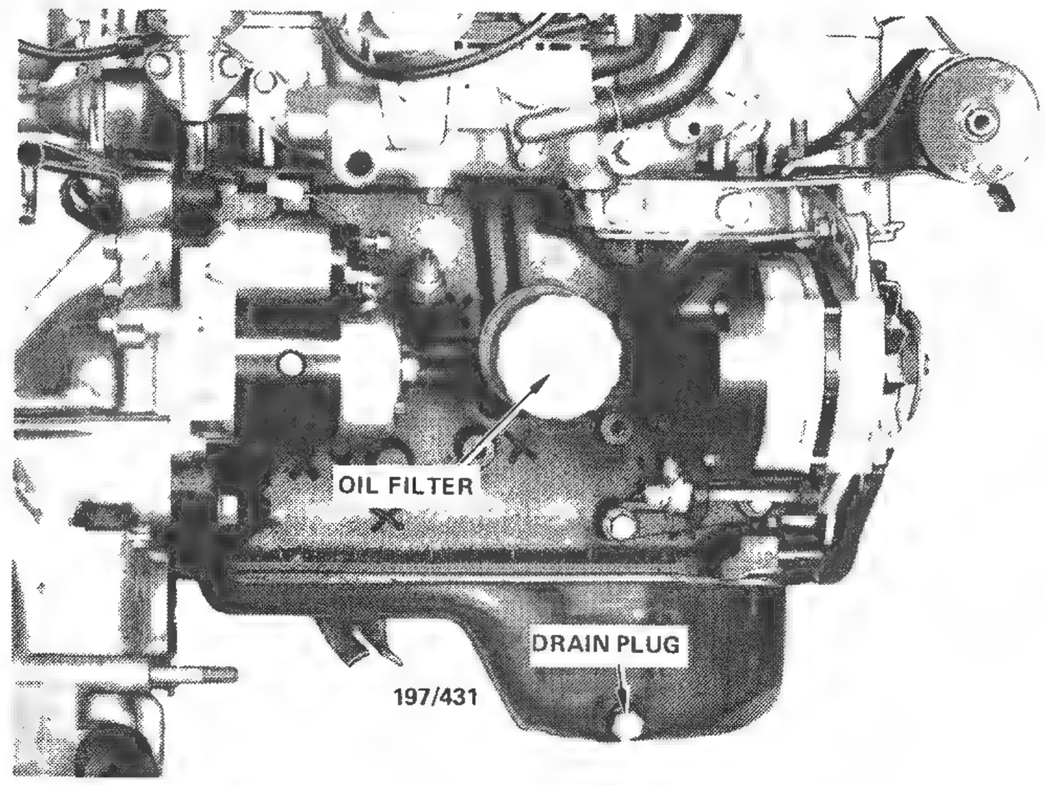

View of the engine removed from the vehicle to show the location of the oil filter and the sump drain plug.

NOTE: It is best if the vehicle is kept as level as possible to avoid false readings when checking the lubricant levels.

(3) Using a wire brush and a cloth clean around the engine sump drain plug and around the speedometer cable where it enters the transmission.

(4) Place a drain tin under the engine sump, remove the engine sump drain plug with the appropriate size ring spanner and allow the engine sump to completely drain.

NOTE: It is best to drain the engine sump with the oil at operating temperature. However, if the oil is hot take care to avoid scalding.

When the engine has completely drained, instal and firmly tighten the sump drain plug. Wipe around the drain plug after installing.

NOTE: Before installing the sump drain plug check the plug sealing gasket to ensure that it is serviceable.

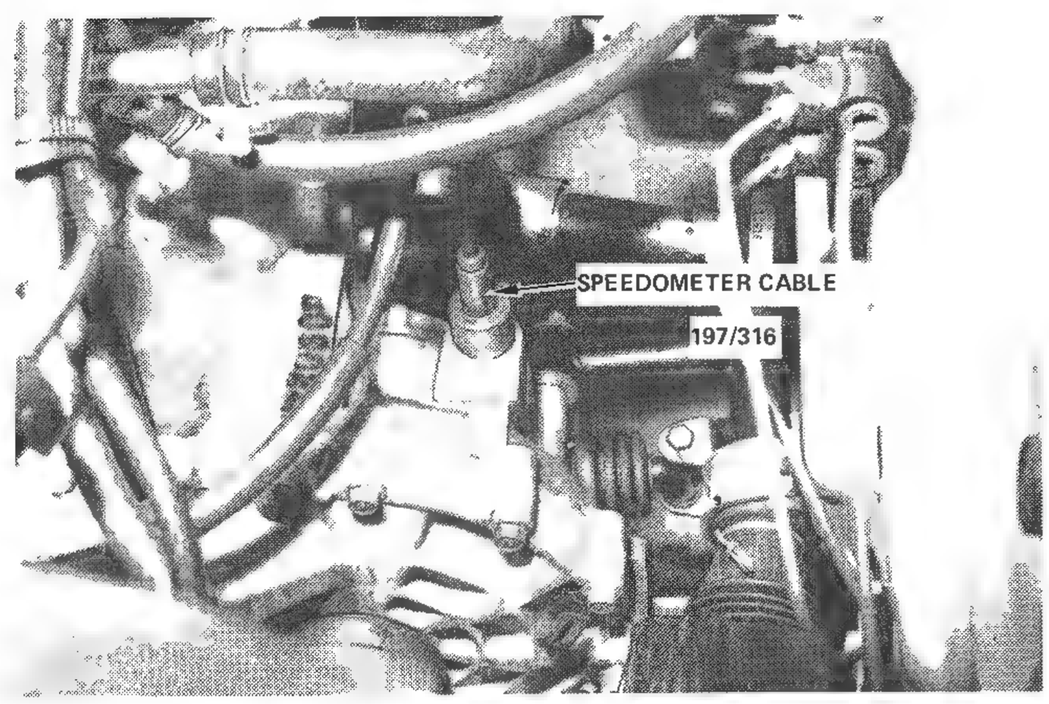

To check and fill manual transmission vehicles, remove the speedometer driven gear assembly and use the driven gear as an oil level gauge.

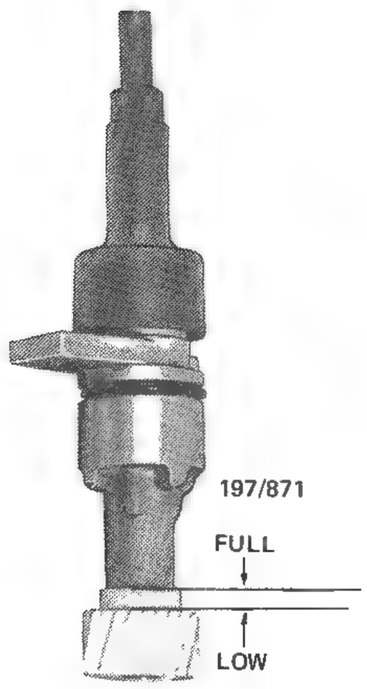

View of speedometer driven gear showing oil level markings.

(5) If the engine oil filter is to be renewed, remove the oil filter with the filter removal tool and allow the residual engine oil to drain into the drain tin. Smear clean oil onto the sealing gasket of the new filter and tighten the filter by hand as per the tightening instructions supplied with the new filter.

NOTE: Before installing the new filter ensure that the sealing gasket from the old filter has not come away from the old filter and adhered itself to the filter sealing seat on the engine.

(6) Disconnect the speedometer cable from the speedometer driven gear assembly at the transmission. Remove the bolt retaining the driven gear assembly to the transmission, withdraw the driven gear assembly from the transmission and wipe it clean. Instal the gear assembly and withdraw it again, the oil level should be between the top of the gear boss and the top edge of the driven gear teeth. Since the transmission and the differential are in the same housing, both levels are checked in one procedure. Overfilled units should be drained until the oil level is correct.

If the oil level is low use the oil gun to fill the transmission to the correct level with the specified oil.

When satisfied that the level is correct, instal the

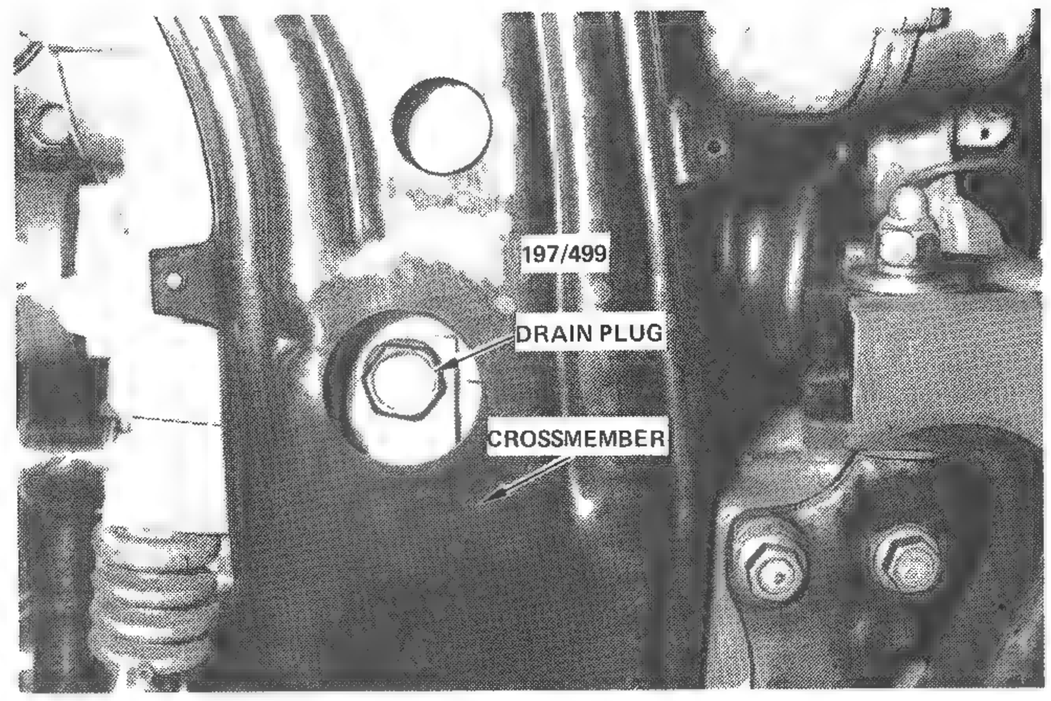

Location of manual transmission drain plug.

speedometer driven gear assembly and wipe around the assembly with a cloth.

NOTE: On automatic transmission vehicles, refer to the Automatic Transmission section for the checking and topping up procedures.

(7) Using the funnel, fill the engine with the specified amount and grade of engine oil and start and run the engine for a few minutes. Ensure that the oil warning lamp goes out. Stop the engine, wait for a few minutes and check the oil level on the dipstick. If necessary add oil to bring the level to the full mark on the dipstick.

NOTES: To prevent overfilling initially, it is good policy not to pour all of the specified amount of the oil into the engine in one go as sometimes the amounts specified are only approximate. It is best to hold back at least half a litre and top up to the level mark on the dipstick after the engine has been run for a few minutes.

(8) Check thoroughly for oil leaks at the engine sump drain plug and the engine oil filter, if a new filter was fitted.

(9) Referring to the Lubrication and Maintenance Service Schedules, lubricate and check all other items which coincide with the oil change intervals.

(10) Lower the vehicle to the ground.

2. SERVICE SCHEDULE

JOB	daily or 1000km	THOUSAND KILOMETRES							
		10	20	30	40	50	60	70	80
ENGINE									
(1) Check the oil level on the dipstick each time the fuel tank is topped up or every 1,000 km. Top up as necessary with the correct grade of engine oil.	●								
(2) Drain and refill the crankcase and renew the oil filter every 10,000 km or six months.		●	●	●	●	●	●	●	●
NOTE: When driving under severe or dusty conditions it is recommended that the engine oil and filter are changed more frequently.									
(3) Tighten the cylinder head bolts and the inlet and exhaust manifold nuts every 40,000 km or twenty four months.					●				●
(4) Adjust the inlet and exhaust valve clearances every 10,000 km or six months.		●	●	●	●	●	●	●	●
(5) Inspect the drive belt for cracks or damage every 10,000 km or six months. Adjust the drive belt deflection if necessary.		●	●	●	●	●	●	●	●
COOLING SYSTEM									
(1) Check the coolant level in the radiator every 1,000 km.	●								
NOTE: Do not remove the radiator cap if the engine is hot and there is any evidence of pressure in the cooling system. *When topping up the cooling system add corrosion inhibitor to maintain the correct mixture ratio. If operating in cold climates, use an anti-freeze mixture in accordance with the manufacturers instructions.*									
(2) Check the radiator hoses, heater hoses and radiator cap every 20,000 km or twelve months.			●		●		●		●
FUEL SYSTEM									
(1) Inspect the air cleaner element for restrictions every 10,000 km or six months.		●	●	●	●	●	●	●	●
(2) Renew the air cleaner element every 40,000 km or earlier if restrictions are found at the inspection intervals.					●				●
(3) Renew the fuel filter every 20,000 km or twelve months.			●		●		●		●
(4) Inspect the fuel lines, connections and fittings every 20,000 km or twelve months.			●		●		●		●
MANUAL TRANSMISSION AND CLUTCH									
(1) Remove the speedometer driven gear assembly from the transmission and check the oil level every 10,000 km or six months.		●	●	●	●	●	●	●	●
(2) Drain and refill the transmission, initially at 10,000 km and then every 40,000 km or twenty four months.		●				●			
(3) Check the clutch pedal free travel every 10,000 km or six months.		●	●	●	●	●	●	●	●

JOB	daily or 1000 km	THOUSAND KILOMETRES							
		10	20	30	40	50	60	70	80
AUTOMATIC TRANSMISSION									
Check the automatic transmission fluid level every 10,000 km or six months. To check should be made with the transmission at operating temperature, the engine running and the selector lever in the P (Park) position.		●	●	●	●	●	●	●	●
STEERING GEAR									
Check the steering gear and linkage for security, damage and wear at 10,000 km and 20,000 km, then every 20,000 km or twelve months.		●	●		●		●		●
FRONT SUSPENSION									
(1) Tighten the suspension unit mounting nuts every 20,000 km or twelve months.			●		●		●		●
(2) Inspect the front suspension ball joints for wear or damage every 40,000 km or twenty four months.					●				●
(3) Remove, clean and repack the front hub bearings every 40,000 km or twenty four months.					●				●
REAR SUSPENSION									
(1) Remove, clean and repack the rear hub bearings every 40,000 km or twenty four months.					●				●
(2) Tighten the suspension unit mounting nuts every 20,000 km or twelve months.			●		●		●		●
BRAKE SYSTEM									
(1) Check the master cylinder reservoir fluid level every 10,000 km or six months.		●	●	●	●	●	●	●	●
(2) Change the brake fluid and bleed the brake system every 40,000 km or twenty four months.					●				●
(3) Check the hydraulic brake lines and hoses for damage or chafing every 20,000 km or twelve months.			●		●		●		●
(4) Inspect the disc brake pads and the discs for wear every 10,000 km or six months.		●	●	●	●	●	●	●	
(5) Check the adjustment and the operation of the handbrake every 10,000 km or six months.		●	●	●	●	●	●	●	●
(6) Clean and inspect the rear brake shoe linings and drums for wear every 20,000 km or twelve months. Inspect the wheel cylinders for leakage and check the operation of the self adjusting mechanism.			●		●		●		●
(7) Check the brake pedal free travel every 10,000 km or six months.		●	●	●	●	●	●	●	●
BATTERY									
Check and top up the electrolyte with distilled water as required or at least monthly. Never allow the electrolyte level to fall below the plates.									
DISTRIBUTOR AND SPARK PLUGS									
(1) Check and adjust the distributor contact breaker points and reset the ignition timing every 10,000 km or six months. Sparingly lubricate the cam with a high melting point grease.		●	●	●	●	●	●	●	●

JOB	daily or 1000 km	THOUSAND KILOMETRES							
		10	20	30	40	50	60	70	80
(2) Clean and adjust the spark plugs every 10,000 km or six months and inspect the high tension leads and distributor cap for deterioration and cracks.		●	●	●	●	●	●	●	●
(3) Renew the spark plugs every 40,000 km or twenty four months.					●				●
BODY									
Check and lubricate the following components every 10,000 km or six months with dry lubricant: Door locks and strikers, bonnet catch, luggage compartment lid lock and striker. Lubricate with a few drops of oil: Door hinges, throttle linkage and handbrake cable.		●	●	●	●	●	●	●	●
EMMISSION CONTROL									
(1) Check and adjust the carburettor idle speed every 20,000 km or twelve months.			●		●		●		●
(2) The following emission control systems should be checked every 20,000 km or twelve months: Crankcase ventilation, evaporative and exhaust control systems. Check the vacuum hoses and connections, the ventilation hoses and connections and the vapour lines and connections. Renew or repair as necessary.			●		●		●		●
WHEELS AND TYRES									
(1) At least once a week check and adjust the tyre pressures when the tyres are cold. Frequent loss of pressure should be investigated and the leakage rectified. *NOTE: The recommended tyre pressures and sizes of tyres which can be fitted to the vehicle are printed on a placard which is located on the inside of the right hand front door.*									
(2) Inspect the tyres regularly for damage and abnormal wear. Any abnormal wear may be due to one or more of the faults shown in the illustrations in the Wheel and Tyres section.									
(3) Rotate and balance the wheels and tyres to equalise tyre wear as necessary.									

3. LUBRICATION CHART

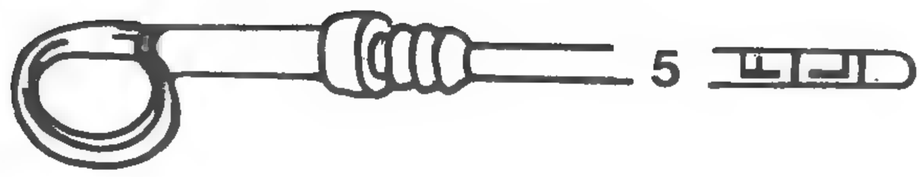

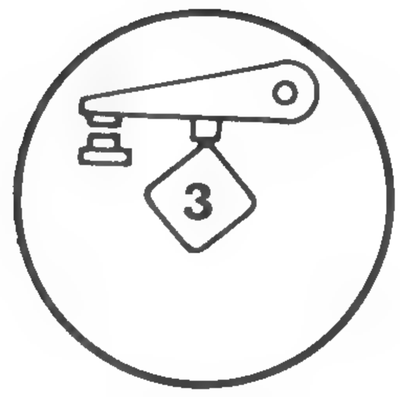

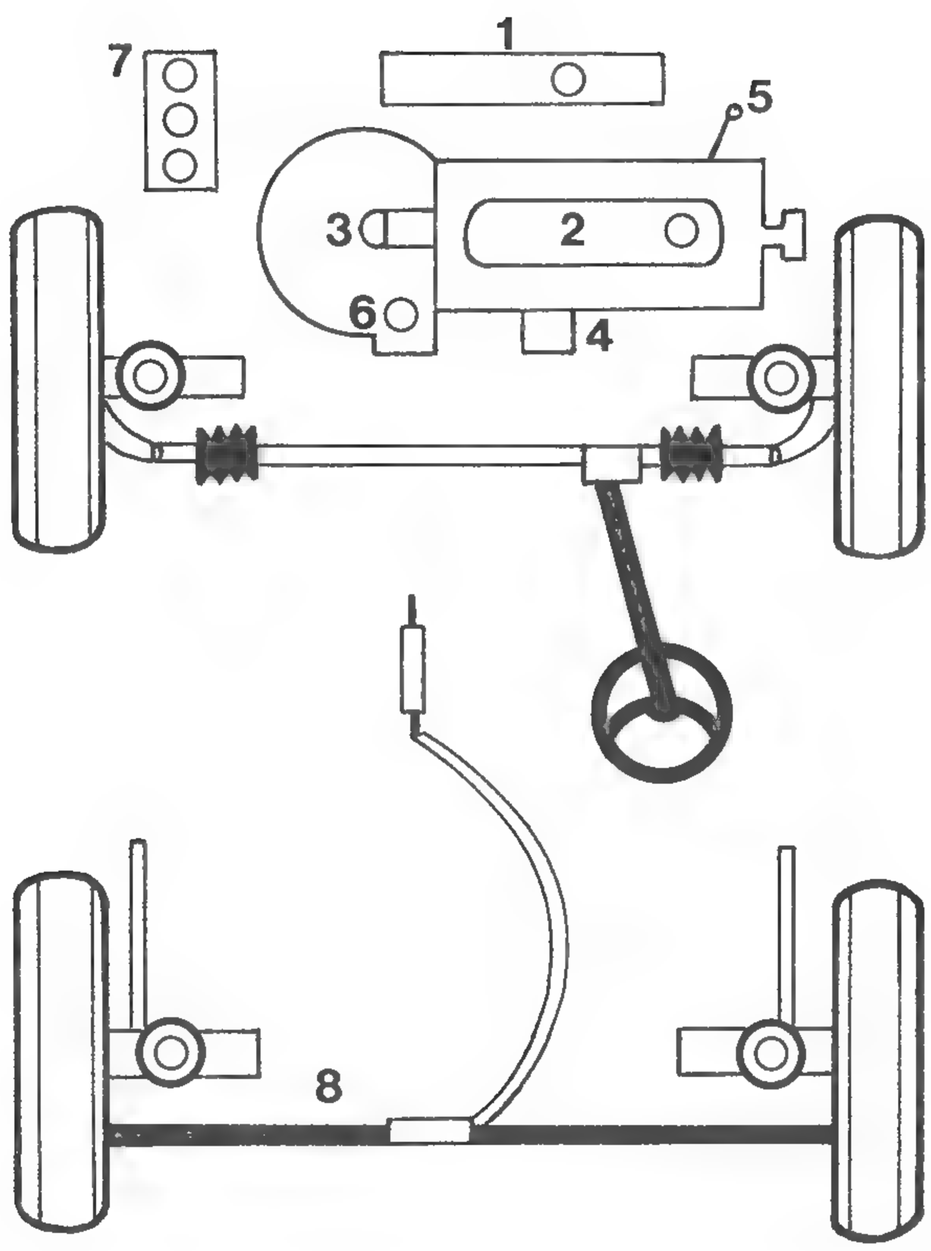

LUBRICATION KEY

1. Radiator.
2. Oil filler cap.
3. Distributor cam lobe lubrication point.
4. Oil filter.
5. Engine oil dipstick.
6. Transmission filler point Automatic and Manual.
7. Battery.
8. Handbrake cable.

4. MAINTENANCE CHART

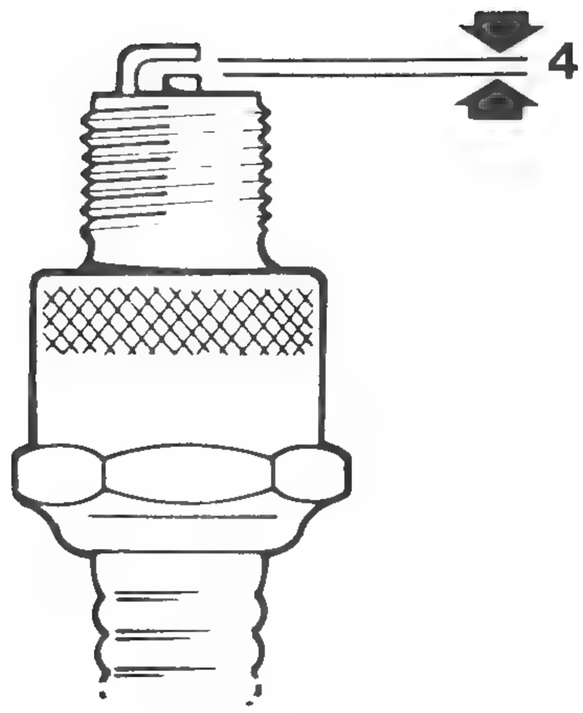

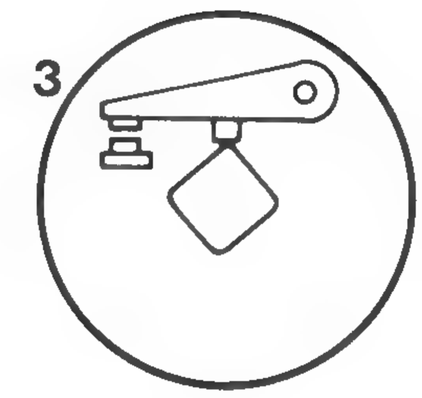

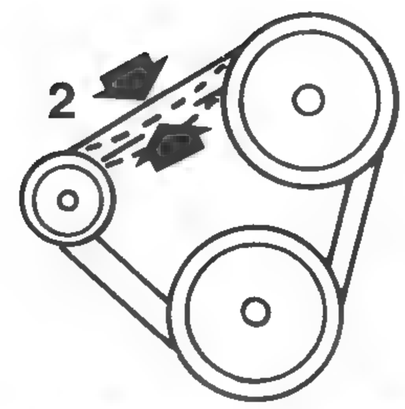

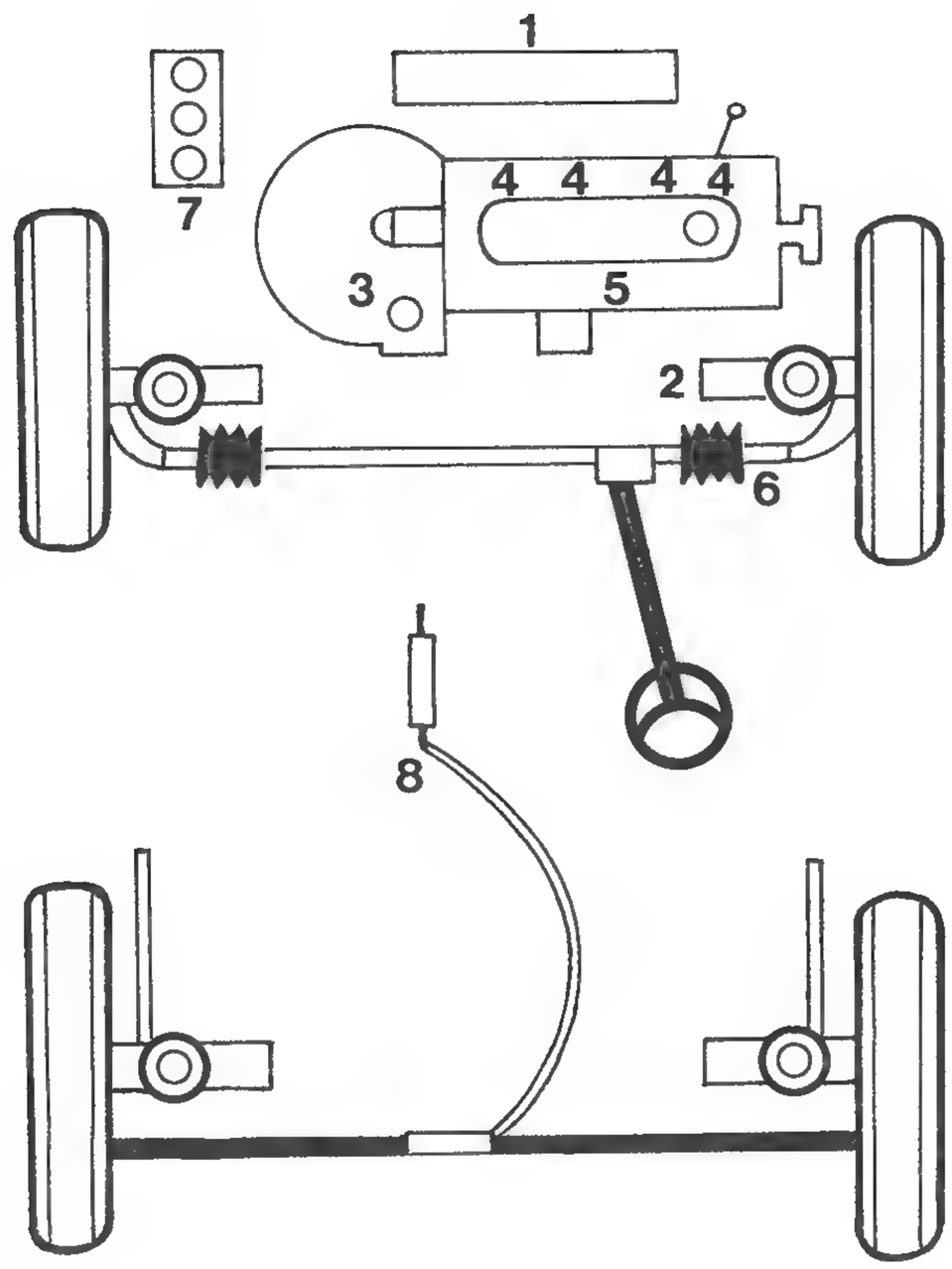

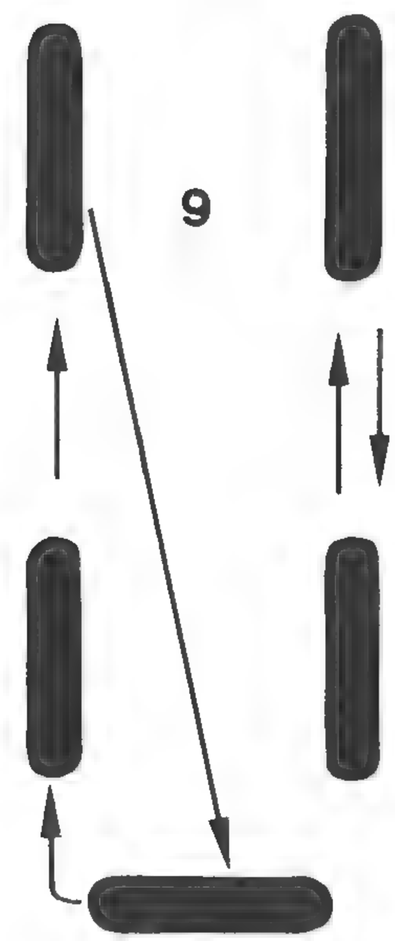

MAINTENANCE KEY

1. Radiator.
2. Drive belt checking point.
3. Distributor and contact point gap.
4. Spark plugs and plug gap measuring point.
5. Carburettor and air cleaner assembly.
6. Steering gear and linkage.
7. Fuel filter.
8. Handbrake cable adjustment point.
9. Wheel rotation diagram.

1. HOW TO CHANGE A ROAD WHEEL

(1) Ensure that the vehicle is level, on firm ground and clear from any passing traffic.

(2) If necessary switch on the hazard flashers.

(3) Place the transmission in the P (Park) position on automatic transmission models or reverse gear on manual transmission models.

(4) Firmly apply the handbrake.

(5) Raise the luggage compartment lid, remove any loose items and remove the floor cover from the luggage compartment.

(6) Lift the cover plate, remove the 'T' bolt and remove the jack from its compartment on the right hand side of the spare road wheel.

(7) Open the tool compartment flap on the right hand side inner panel and remove the wheel spanner from its retaining clips.

(8) Lift the spare road wheel cover plate and remove the jack handle from its retaining clips.

(9) Unscrew and remove the bolt securing the spare road wheel to the body and remove the road wheel from the luggage compartment.

(10) When changing a road wheel, always chock the road wheel diagonally opposite to the road wheel being removed. Ensure that the road wheel is chocked at the front and rear.

(11) Instal the wheel spanner to a road wheel nut in such a manner that the bar end of the spanner is horizontal and on the left hand side of the road wheel nut. Apply pressure to the end of the wheel spanner in an anti-clockwise direction and slacken the road wheel nut approximately half a turn. Carry out the above procedure on the remaining wheel nuts.

(12) Instal the jack to the relevant jacking point under the body sill panel, ensuring that the edge of the body sill panel fits into the jackhead slot.

(13) Fit the jack handle to the screw mechanism on the jack. Rotate the jack handle in a clockwise direction and slightly raise the vehicle. Check that the jack is still positioned correctly on the jacking point.

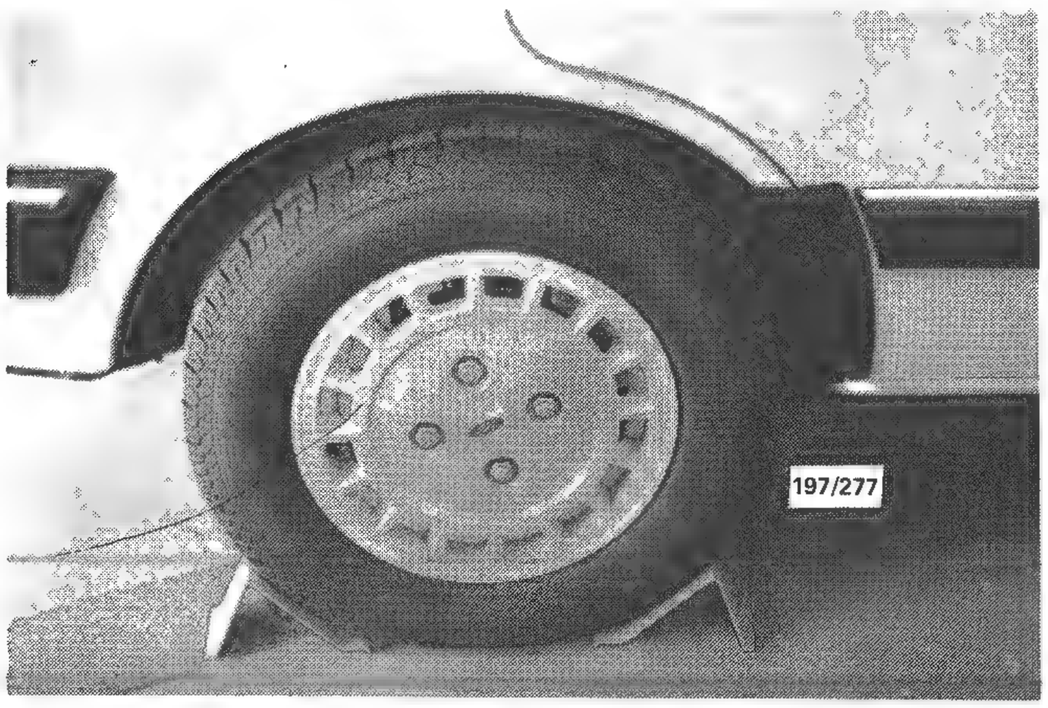

Chock the road wheel diagonally opposite the road wheel being removed.

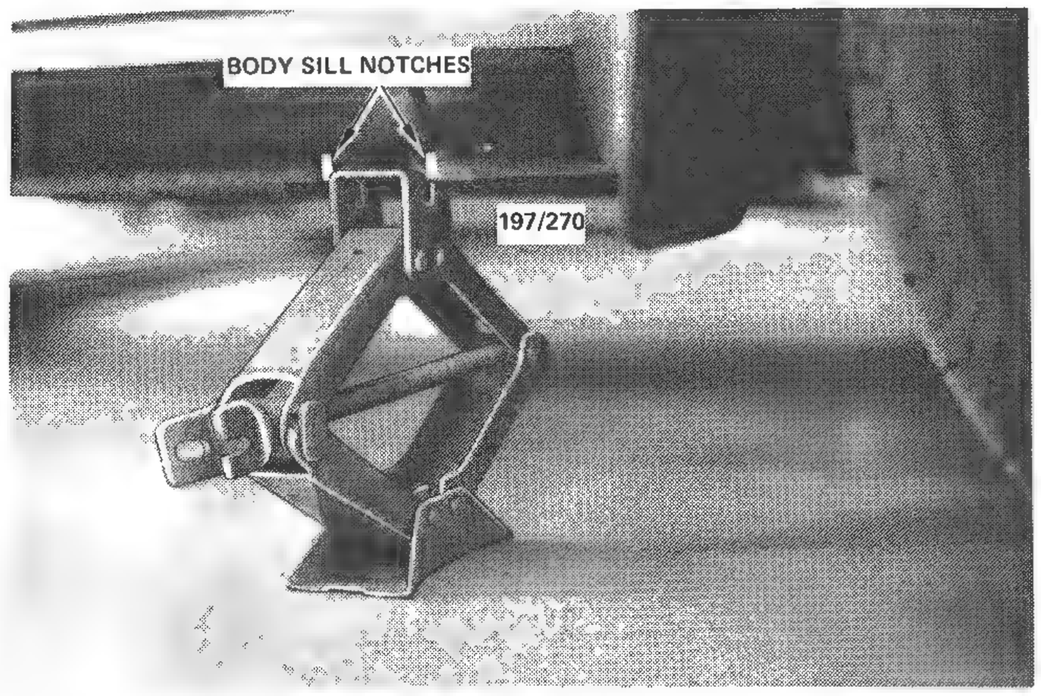

View of jack correctly installed to front jacking point. Right hand side shown.

(14) Raise the vehicle so that the road wheel and tyre clears the ground. Allow enough clearance between the tyre and the ground for the spare road wheel to be installed.

NOTE: Under no circumstance get under the vehicle whilst the jack is the only means of support.

(15) Unscrew the road wheel nuts and remove the road wheel. Remove the hub cap from the centre of the road wheel and attach it to the spare road wheel.

(16) Fit the spare road wheel to the wheel hub and loosely instal the road wheel nuts.

(17) Using the wheel spanner, tighten the road wheel nuts as much as possible.

(18) Lower the vehicle to the ground, by rotating the jack handle anti-clockwise and remove the jack from under the vehicle.

(19) Using the wheel spanner tighten the road wheel nuts in a diagonal sequence. It will be necessary to repeat the above procedure several times until the road wheel nuts are securely tightened.

(20) Remove the chocks from the road wheel.

(21) Place the defective road wheel in the luggage compartment and secure with the retaining bolt.

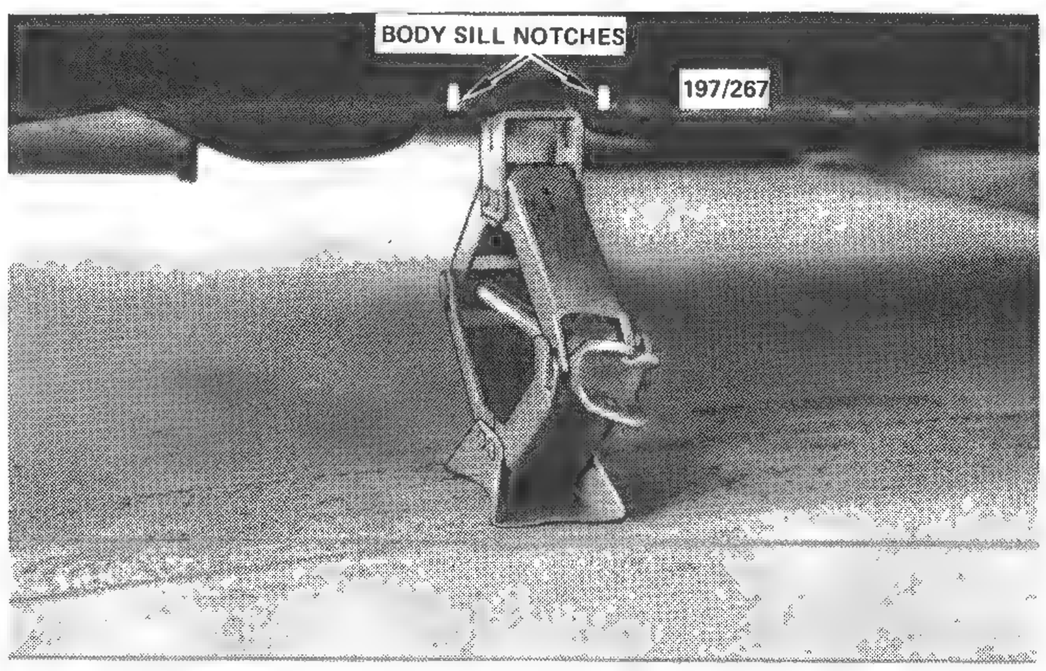

View of jack correctly installed to rear jacking point. Right hand side shown.

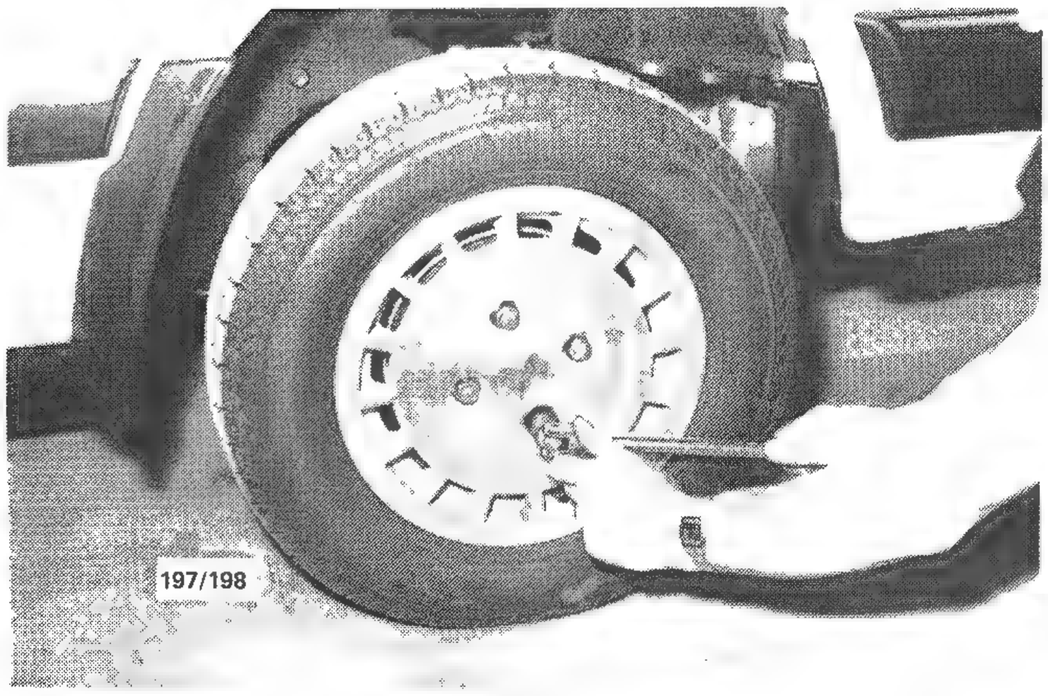

Tighten the wheel nuts in a diagonal sequence.

(22) Instal the jack handle to its retaining clips and close the spare road wheel cover plate.

(23) Instal the wheel spanner to its retaining clips in the tool compartment and close the tool compartment flap.

(24) Place the jack in its position and secure the jack with the 'T' bolt.

(25) Refit the floor cover in the luggage compartment.

NOTE: Repair the defective road wheel as soon as possible and check the tyre pressure on the road wheel just installed.

2. TYRE WEAR TROUBLE SHOOTING

ABNORMAL WEAR ON BOTH SIDES OF TREAD

(1) Under inflation of tyres: Check and inflate to recommended pressures.

(2) Overloading: Reduce maximum loading.

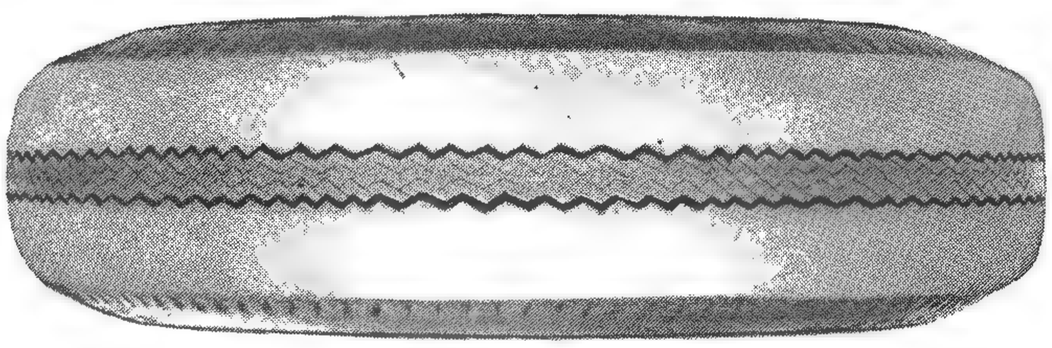

ABNORMAL WEAR IN CENTRE OF TREAD

(1) Over inflation of tyres: Check and reduce to recommended pressures.

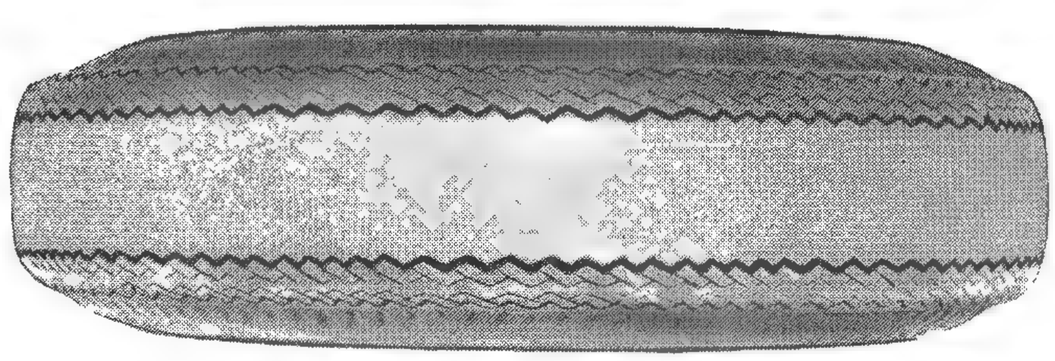

ABNORMAL WEAR ON INSIDE OF TREAD

Front Tyres

(1) Insufficient camber angle: Check front end alignment.

(2) Sagging front coil springs: Check and renew faulty springs.

(3) Loose or worn front hub bearings: Check and adjust or renew front hub bearings.

(4) Loose or worn suspension components: Check and renew faulty components.

(5) Bent steering knuckle: Check and renew steering knuckle.

Rear Tyres

(1) Bent stub axle: Check and renew stub axle.

(2) Loose or worn suspension components: Check and renew faulty components as necessary.

(3) Loose or worn rear hub bearings: Check and adjust or renew hub bearings.

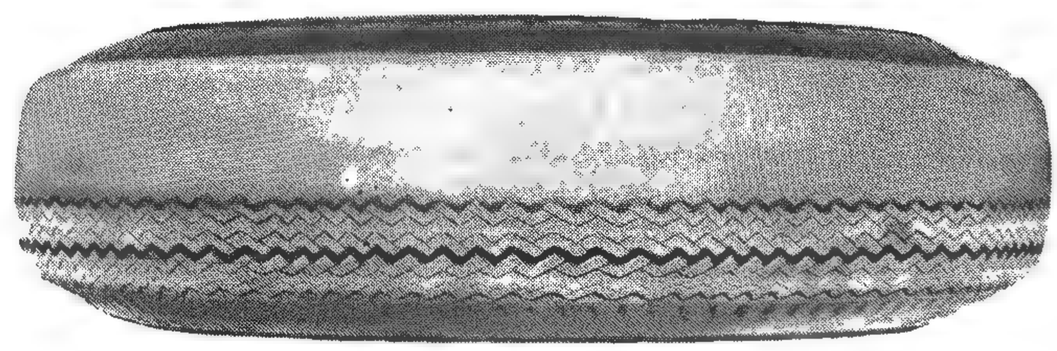

ABNORMAL WEAR ON OUTSIDE OF TREAD

Front Tyres

(1) Excessive camber angle: Check front end alignment.

(2) Incorrect coil springs fitted: Check and instal recommended replacement springs.

(3) Excessive speed when cornering: Revise driving habits.

Rear Tyres

(1) Loose or worn suspension components: Check and renew faulty components as necessary.

(2) Bent stub axle: Check and renew stub axle.

SPOTTY OR IRREGULAR WEAR

(1) Static or dynamic unbalance of wheel and tyre assembly: Check and balance wheel and tyre assembly.

(2) Lateral run out of wheel: Check and true up or renew wheel.

(3) Excessive play in hub bearings: Check and adjust or renew hub bearings.

(4) Excessive play in front suspension ball joints: Check and renew ball joints.

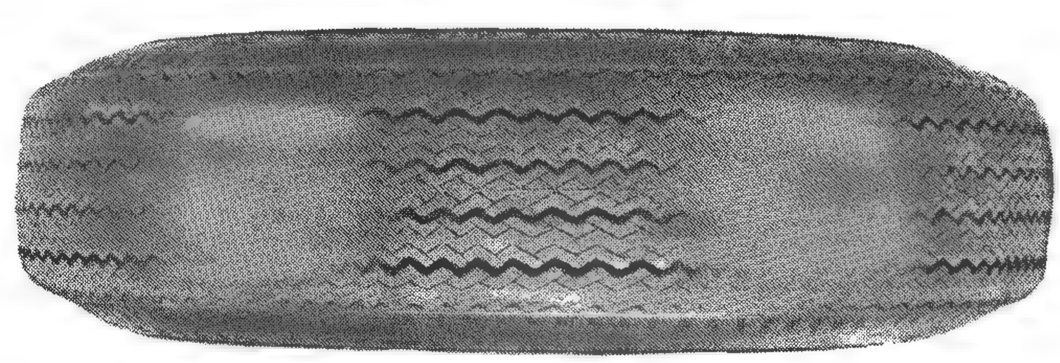

LIGHTLY WORN SPOTS AT CENTRE OF TREAD

(1) Static unbalance of wheel and tyre assembly: Check and balance wheel and tyre assembly.

(2) Radial run out (eccentricity) of wheel: Check and renew wheel.

FLAT SPOTS AT CENTRE OF TREAD

(1) Repeated severe brake application: Revise driving habits.

(2) Lack of tyre rotation: Periodically rotate wheel and tyre assemblies.

HEEL AND TOE WEAR (SAWTOOTH EFFECT)

(1) Overloading: Revise maximum loading.
(2) High speed driving: Avoid as far as possible.
(3) Excessive braking: Revise driving habits.

FEATHERED EDGE ON THE SIDE OF TREAD PATTERN

Front Tyres

(1) Sharp inside edge, excessive toe in: Check and adjust wheel alignment.

(2) One tyre sharp inside edge, other tyre sharp outside edge: Check for bent steering knuckle and renew.

Rear Tyres

(1) Loose or worn suspension components: Check and renew faulty components as necessary.

(2) Excessive toe in or toe out: Check and adjust wheel alignment.

(3) Stub axle bent: Check and renew stub axle.

NOTE: To preserve tyre life it is good policy to periodically have the wheels balanced and the steering geometry checked on a reliable wheel alignment machine. Under no circumstances mix radial ply and conventional ply tyres. Fit only tyres of the same construction to all four wheels.

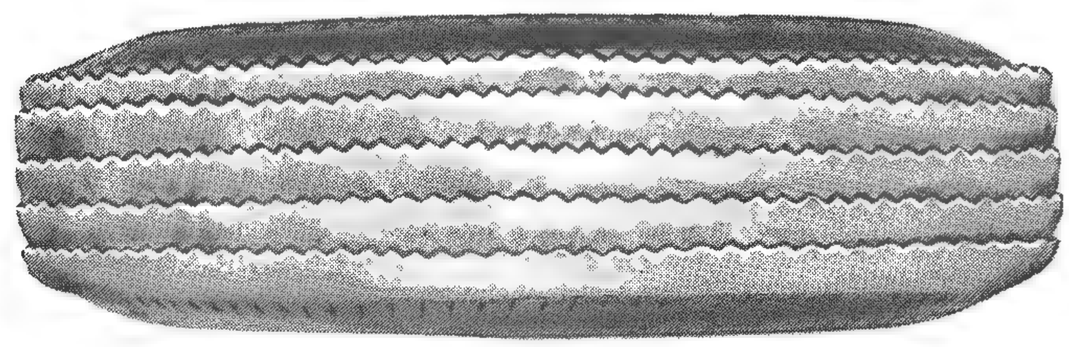

1. TUNE-UP SPECIFICATIONS

Firing order 1–3–4–2

Spark plug type:
Motorcraft ..... AGR 32, AGR 22 or AGN 22
Spark plug gap ..... 0.8 mm
Spark plug tightening torque ..... 23 Nm
Contact breaker gap ..... 0.5 mm
Distributor dwell angle ..... 52 deg

†Ignition timing at idle speed:
All models, except Sport ..... 10 deg btdc
Sport ..... 6 deg btdc
Location of timing marks ..... Crankshaft pulley and timing cover.

Engine idle speed:
Manual transmission ..... 850 ± 50 rpm
Automatic transmission ..... 750 ± 50 rpm in 'D' (Drive)
*Compression pressure ..... 883–1172 kPa

Valve clearances (hot):
Valve stem side –
Inlet ..... 0.25 mm
Exhaust ..... 0.30 mm
Camshaft side –
Inlet ..... 0.18 mm
Exhaust ..... 0.22 mm
Drive belt deflection ..... 12–14 mm

*Typical compression pressure with the engine hot and at cranking speed. Variation between highest and lowest reading cylinders should not exceed 25 percent of the highest reading cylinder.
†Refer to emission decal on vehicle.

2. TUNE-UP OPERATIONS

Special Equipment Required:
To Test Compression – Compression gauge

TO SERVICE AIR CLEANER

The air cleaner is fitted with a viscous paper type element. The element may be cleaned in service and should be renewed at the recommended intervals of 40,000 km or 24 months, whichever occurs first. This distance is only a guide for normal operating conditions and should be reduced accordingly if the vehicle is operating under extremely dusty conditions.

NOTE: Paper air cleaner elements should not be washed in petrol or any other type of cleaning solvent. If the element has been washed in solvent or has become oil soaked then it should be discarded and a new element fitted.

(1) Remove the wing nut and washer from the air cleaner top cover. Unsnap the retaining clips and remove the top cover and element from the main body.

(2) Wipe clean any dust or oil accumulation in the main body and top cover, taking care not to allow any foreign matter to fall down the carburettor throat.

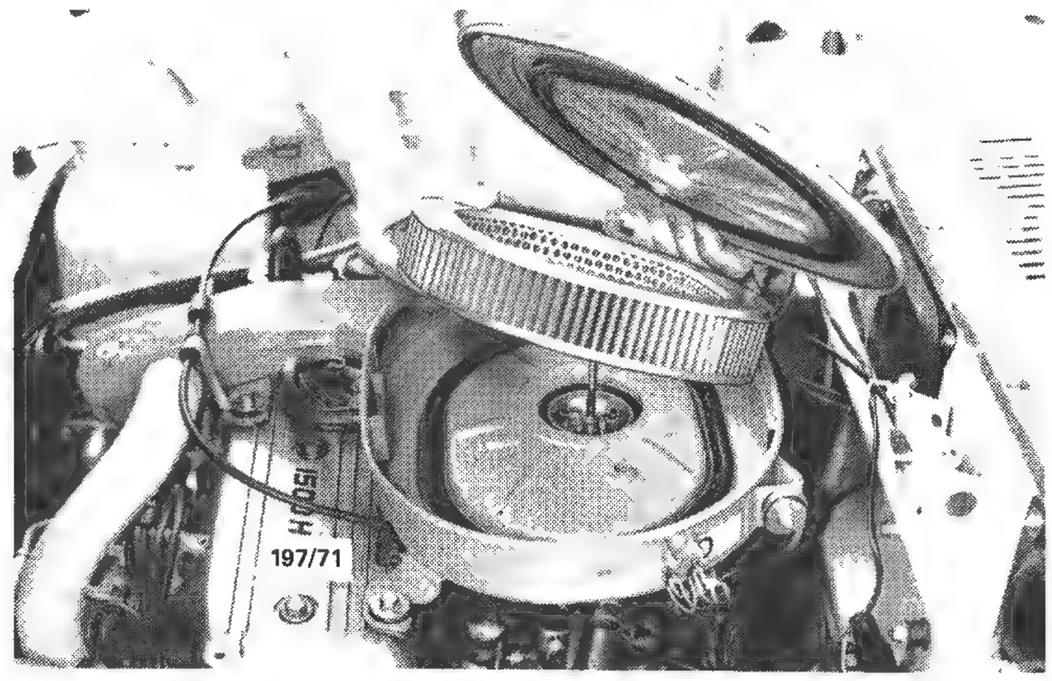

The air cleaner should be serviced at regular intervals.

(3) The air cleaner element may be cleaned by tapping it on the workshop bench to dislodge the dust and by blowing from the inside outwards, using low air pressure.

Installation is a reversal of the removal procedure with attention to the following points:

Place the element centrally in the air cleaner main body, instal the top cover and retain it in position with the wing nut and the clips.

TO CHECK AND RENEW FUEL FILTER

Working in the engine compartment, inspect the fuel filter for any signs of dirt or water. If dirt or water are evident in the filter or if the filter is to be renewed according to the service schedule in the Lubrication and Maintenance section, proceed as follows:

(1) Remove the filter from the retaining clips and clamp close the hose leading from the fuel tank to the fuel filter using a pair of vice grips or a brake hose clamp. Ensure that the hose is not damaged when clamping it closed.

(2) Hold a suitable container beneath the fuel filter. Squeeze the ends of the hose clamps on the fuel hoses together and pull the hoses from the filter. Drain the fuel from the hoses into the container.

(3) While squeezing the ends of the hose clamps together push the hoses onto the connections of the new fuel filter.

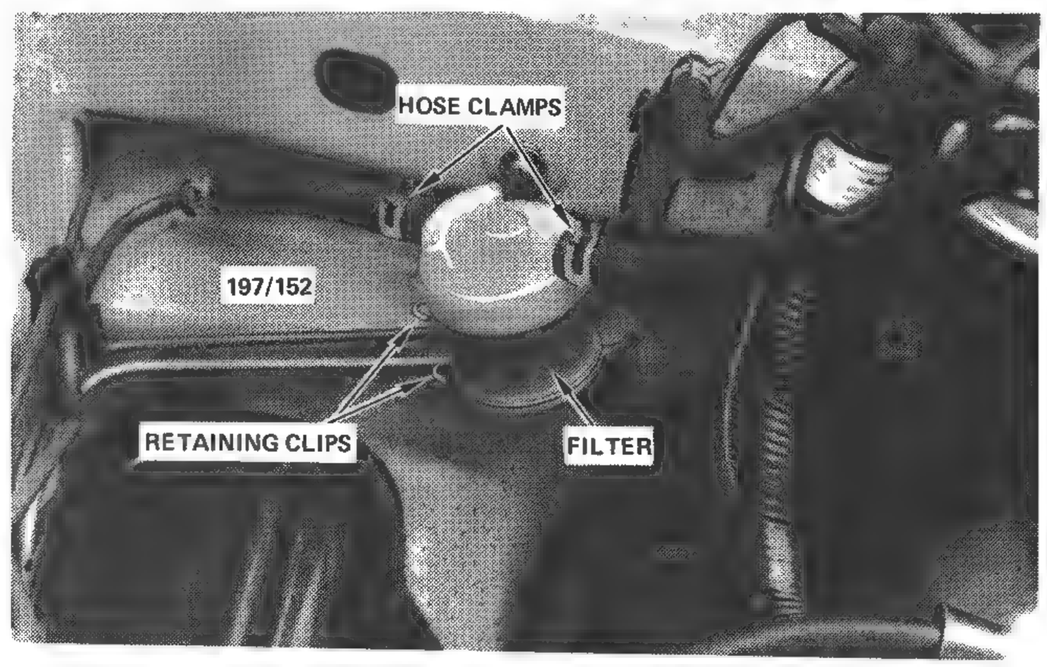

Installed view of the fuel filter.

NOTE: Ensure that the arrow on the fuel filter is pointing in the same direction as the flow of the fuel.

(4) Remove the vice grips or brake hose clamp from the fuel hose and fit the filter to the retaining clips.

(5) Run the engine and check for fuel leaks at the filter.

TO RENEW OR CLEAN CONTACT BREAKER POINTS

(1) Remove the distributor cap and rotor arm from the distributor.

(2) Loosen the low tension lead screw on the fixed contact plate and slide the lead terminal from behind the screw.

(3) Loosen the fixed contact plate retaining screws and undo them two or three turns but do not remove them. Note the position of the earth wire.

(4) Slide the breaker point assembly away from the retaining screws and remove the points from the distributor.

(5) Remove the 'C' clip from the moving point pivot post and separate the breaker points.

(6) Inspect the point surfaces and if they are not badly pitted, clean and reface them on a smooth oil stone or with a points file. Wash in clean solvent to remove all traces of oil and dirt.

NOTE: New breaker points should be washed in solvent to remove the anti-corrosive dressing and thoroughly dried before installing.

(7) To instal the breaker points reverse the removal procedure. Ensure the earth wire is correctly positioned.

(8) Turn the engine until the rubbing block of the moving contact is on the highest point of a cam lobe.

(9) Slightly loosen the fixed breaker plate retaining screws and using a suitable screwdriver, move the breaker plate in the necessary direction until a clean feeler gauge blade of the specified thickness is a neat sliding fit in the point gap, then retighten the contact plate retaining screws. Again check the fit of the feeler gauge blade between the breaker points.

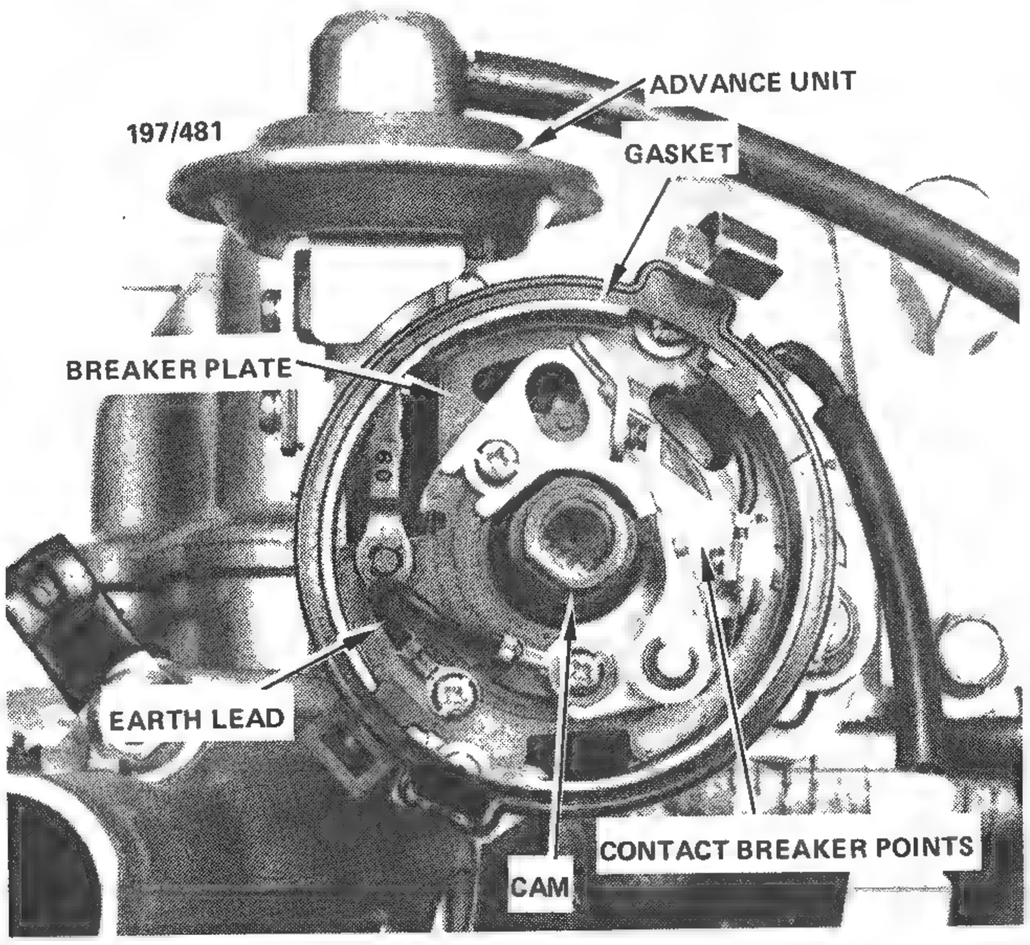

Distributor with cap and rotor arm removed.

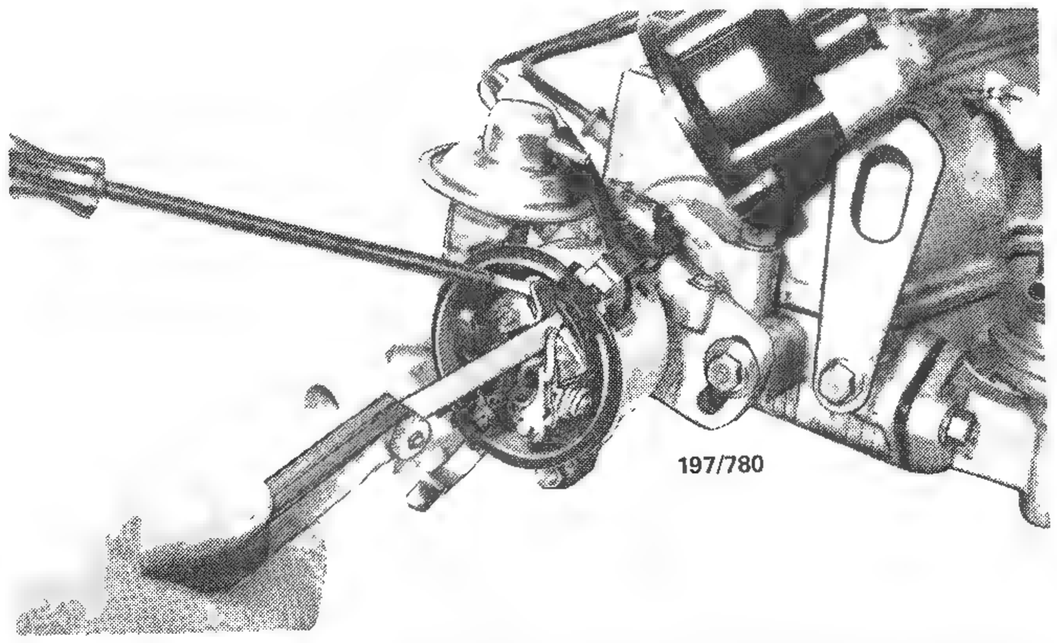

Adjusting the contact breaker points using feeler gauges.

(10) Turn the engine and measure the breaker point gap at each cam lobe, ensuring that the heel of the breaker arm rubbing block is in the position of maximum lift on each cam.

NOTE: Variation in lift between any two cam lobes should not exceed 0.05 mm when measured at the breaker points.

(11) Place a smear of high melting point grease on the cam lobes and instal the rotor arm and the distributor cap.

(12) Check and adjust the distributor dwell angle and the ignition timing – see To Adjust Dwell Angle and Ignition Timing.

TO SERVICE HIGH TENSION LEADS

The high tension leads between the spark plugs and the distributor cap, and the centre high tension terminal on the distributor cap and the ignition coil are of special manufacture and have a carbon impregnated core instead of a wire core.

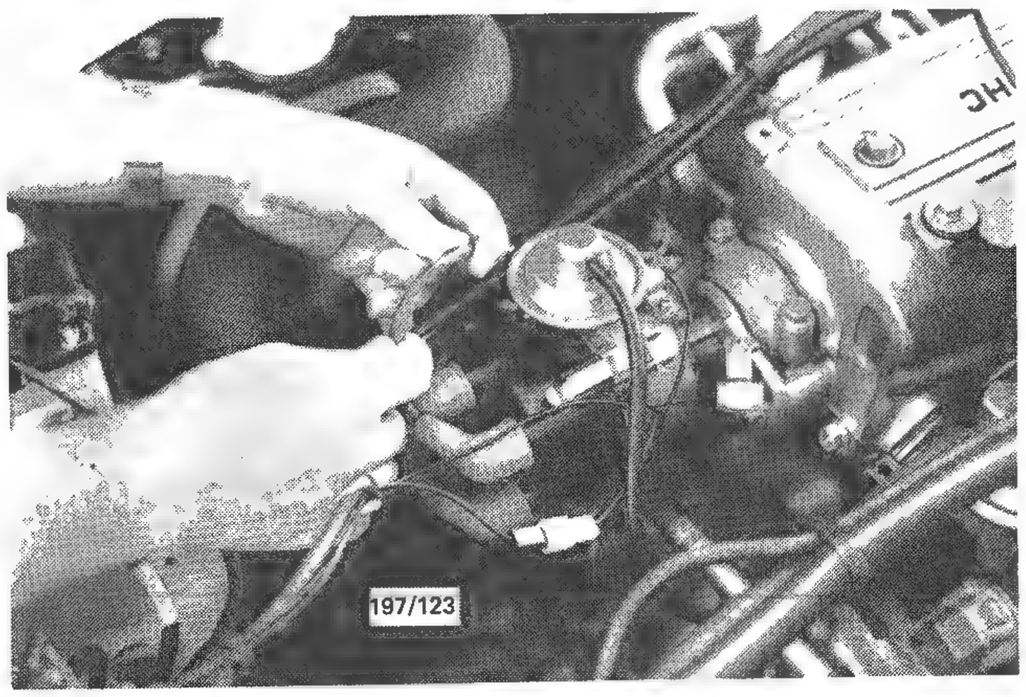

Check the high tension leads for perishing or cracking. Also check the lead ends for burning.

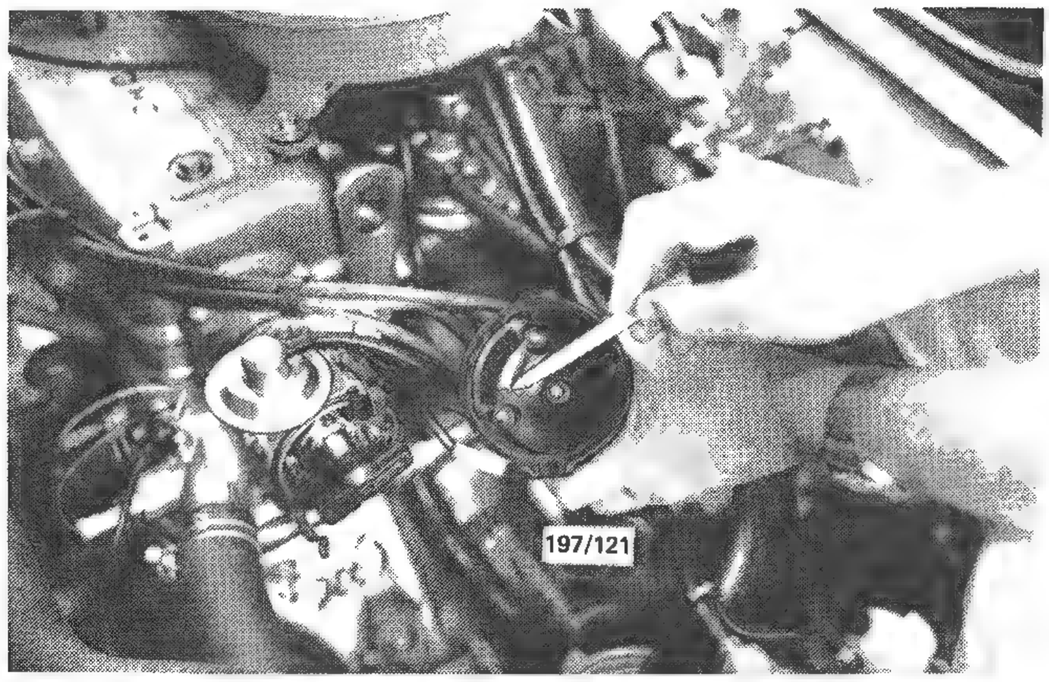

Check the distributor cap for cracks or tracking between terminals.

This is to eliminate radio interference and care must be taken when removing the leads from the spark plugs to ensure that the leads are not damaged by stretching, which will break the core and render the lead unserviceable.

Always remove the lead from a spark plug by pulling on the lead terminal or terminal insulator. Use the same care when connecting the lead to the plug.

If a lead has a broken core it will cause misfiring. Check the leads for perishing or cracking and renew as required. Never attempt to repair defective leads.

The leads may be carefully cleaned, using a cloth moistened with kerosene, then wiping completely dry.

Also check the distributor cap for cracks or tracking between the high tension terminals on both the inside and outside of the cap. Renew the cap if cracks or tracking are evident.

Check the carbon brush in the centre of the distributor cap for evidence of arcing and renew as necessary.

TO SERVICE SPARK PLUGS

The spark plugs should be removed for inspection, cleaning and resetting at intervals of 10,000 km.

Before removing the spark plugs ensure that the area around each plug is clean to prevent foreign matter entering the cylinder when the plugs are removed.

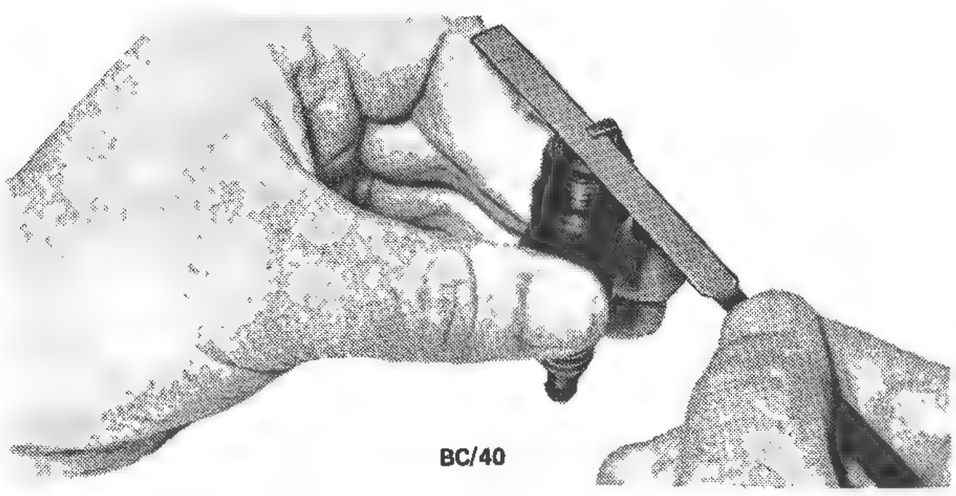

Lightly file the plug electrodes flat with a points file.

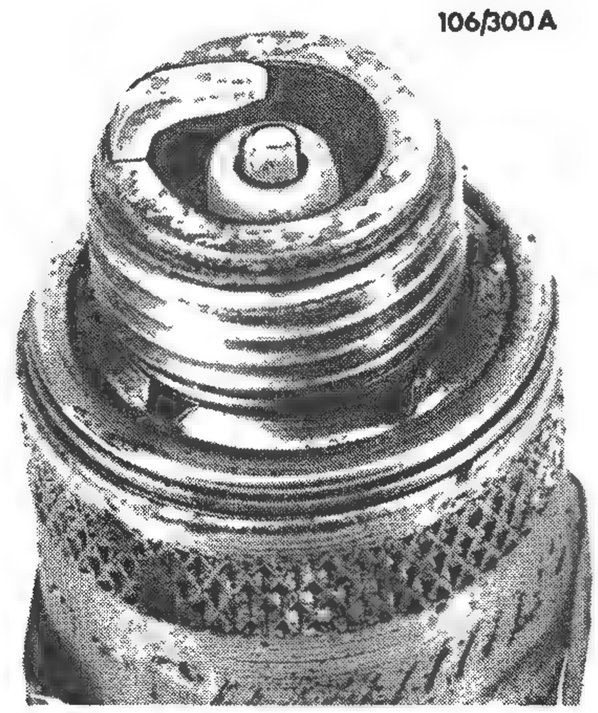

Spark plug with burnt electrodes and white blistered appearance. Possibly due to incorrect plug type, loose plug or motor running too hot.

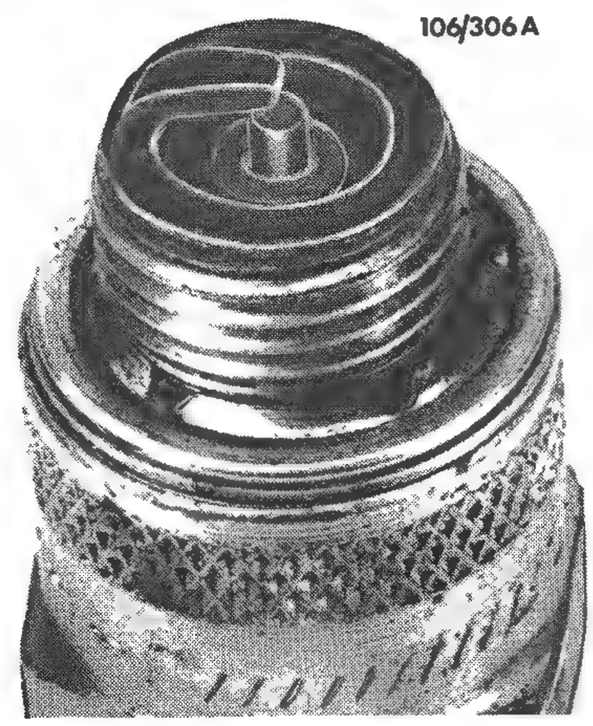

Black damp deposits can be caused by excessive oil consumption or incorrect plug type. Spark plugs in this condition are usually not firing.

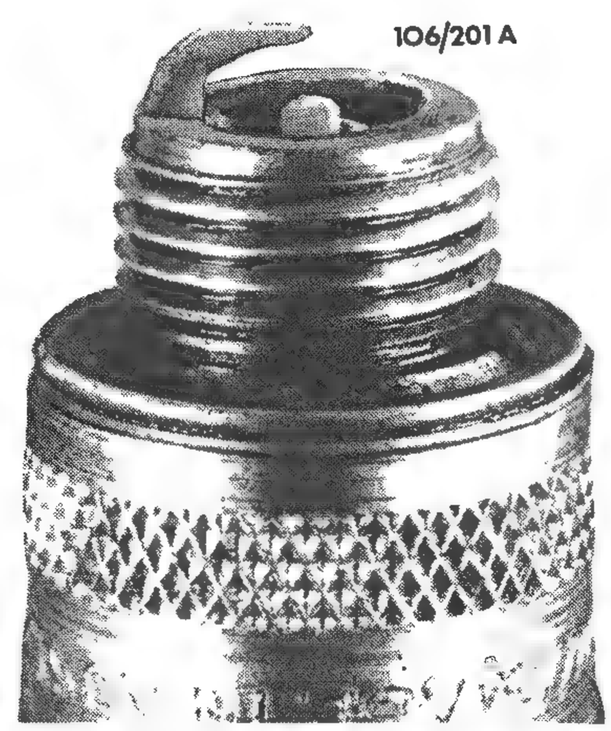

When plug electrodes are eroded to this degree the spark plug can be considered worn out and should be replaced using a spark plug of the recommended heat range.

Spark plugs removed from an engine in good mechanical condition should have a light powdery deposit ranging from light brown to greyish tan in colour. After considerable service the electrodes will show signs of wear or normal burning. Spark plugs showing a thick black oily deposit indicate an engine in poor mechanical condition or possibly that a plug with too low a heat range has been fitted.

Spark plugs showing a white or yellowish deposit indicate sustained high speed driving or possibly that plugs with too high a heat range have been fitted, particularly when these deposits are accompanied by blistering of the porcelain and burning of the electrodes.

If the heat range is correct clean the plugs on a sandblasting machine and blow clean with compressed air. Ensure that all traces of abrasive grit are removed from the spark plug threads and from the well in the plug body.

Carefully open the electrode gap a little, by bending the side electrode, and lightly file the electrodes flat with a points file.

NOTE: Never attempt to alter the electrode gap by bending the centre electrode as damage to the porcelain insulator will result.

Measure the gap between the electrodes preferably with clean wire gauges. If wire gauges are unavailable then use clean feeler gauges. Move the side electrode towards or away from the centre electrode to obtain the correct gap.

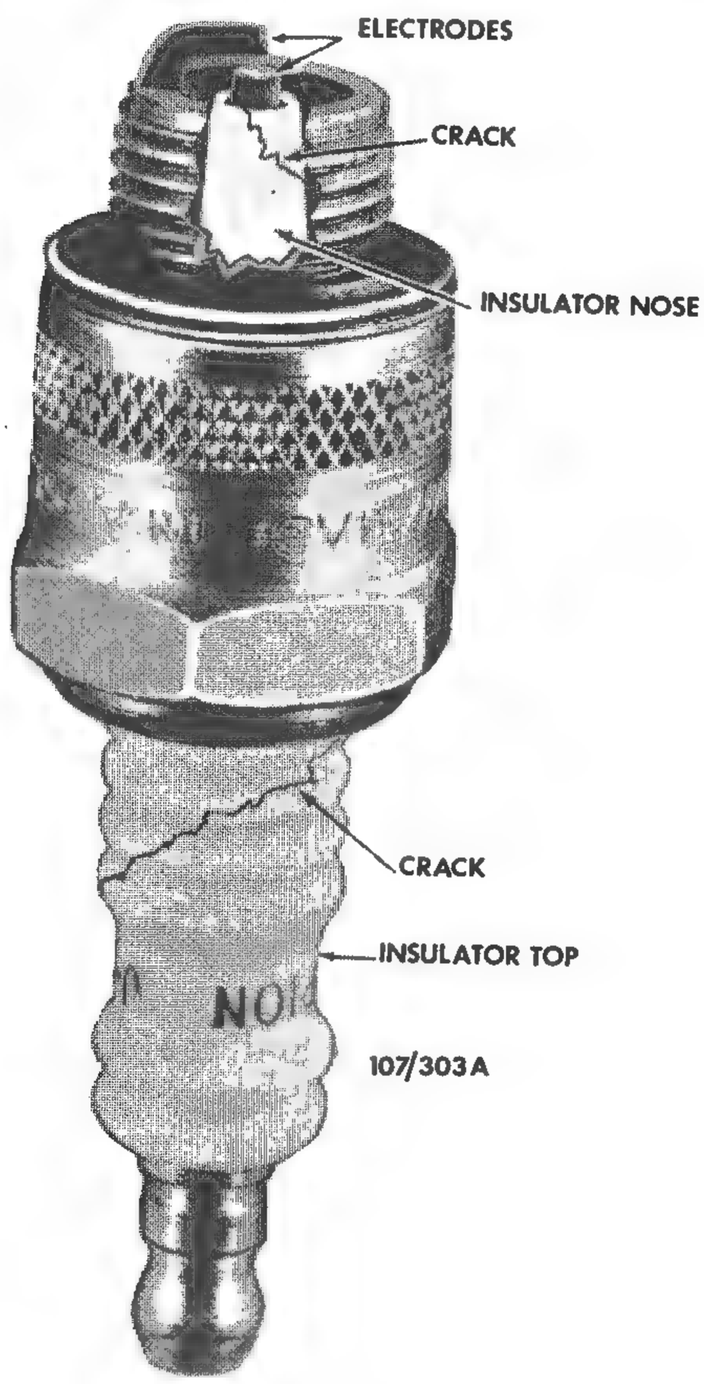

Cutaway view of spark plug showing crack in insulator nose which can be caused by exerting pressure against the centre electrode when adjusting gap. Other crack shown on insulator is caused by tilting plug spanner.

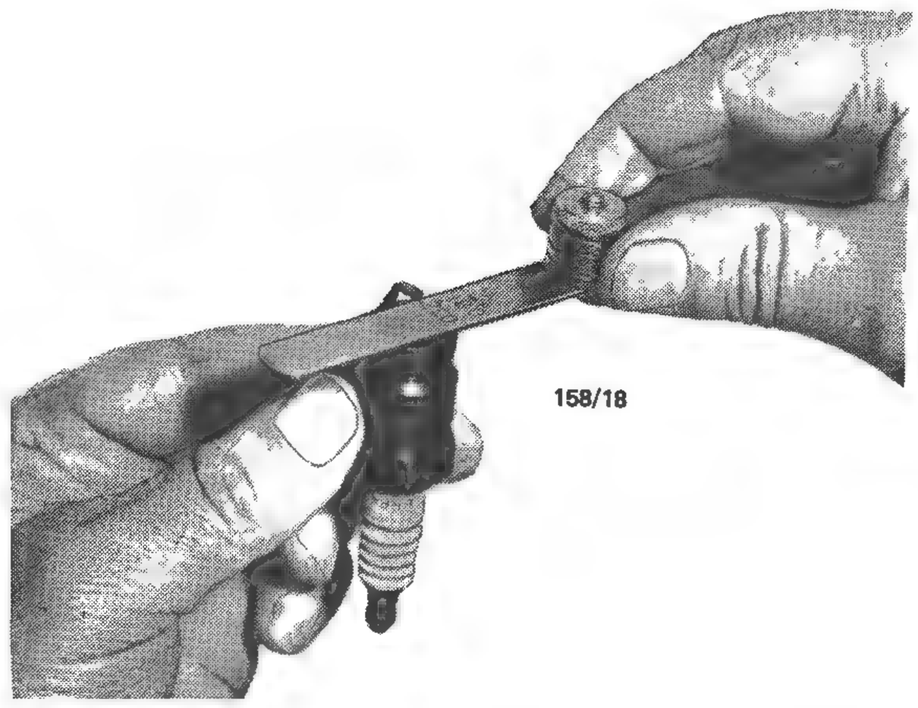

Checking spark plug electrode gap with feeler gauge.

Screw the plugs into the cylinder head finger tight, then use a torque wrench to tighten the plugs to the specified torque.

NOTE: If a torque wrench is unavailable extreme care must be taken when tightening the spark plugs, as overtightening may lead to stripping of the thread from the cylinder head. If the plugs are tightened with the fingers and then taken up an additional ¼ of a turn with a spark plug wrench, they will be tight enough. Wherever possible instal new gaskets to spark plugs that are going back into service.

TO TEST COMPRESSION

(1) Disconnect the high tension leads from the spark plugs.

(2) Ensure that the area around each spark plug is clean to prevent foreign matter entering the cylinders and then remove the spark plugs.

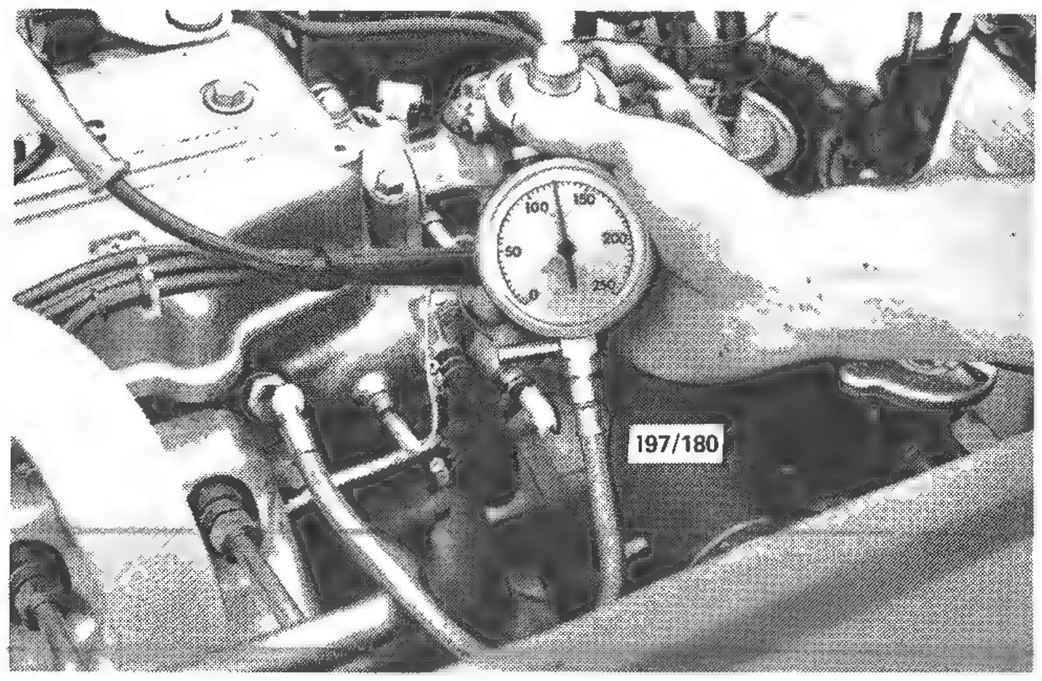

Checking the cylinder compression using a compression gauge.

(3) Isolate the ignition by removing the high tension lead from the coil.

(4) Apply a compression gauge to number one spark plug hole according to the manufacturers instructions of the instrument being used.

(5) Have an assistant fully open the throttle and operate the starter switch to rotate the engine. Observe the compression gauge and stop the engine when the gauge has reached the highest reading.

(6) Record the reading and then check the compression of the remaining cylinders in the same manner.

(7) Compare all readings taken. Refer to Specifications for nominal pressure and maximum cylinder variation.

(8) If a low reading is taken on one or more cylinders, the trouble may be isolated as follows:

(a) Inject a small amount of engine oil into the spark plug hole of the cylinder concerned, ensuring that the oil is evenly distributed within the cylinder.

(b) Repeat the compression test on the cylinder concerned.

A substantial increase of compression pressure indicates faulty or worn piston rings, piston or cylinder. No increase of compression pressure indicates burnt, obstructed or sticking valves, or a leaking or blown head gasket.

TO ADJUST DWELL ANGLE AND IGNITION TIMING

(1) Connect a tachometer, dwell meter and timing light to the engine according to the meter manufacturers instructions, then start the engine and bring to normal operating temperature.

(2) Adjust the engine idle speed to Specifications.

(3) Check the dwell angle (see Specifications) and if necessary adjust, by increasing the contact breaker gap to decrease dwell or decreasing the gap to increase the dwell. The engine will have to be stopped and the distributor cap and rotor arm removed to carry out this operation.

(4) When the correct dwell angle has been obtained, fluctuate the engine speed between idle and 2000 rpm noting any variation in dwell angle reading.

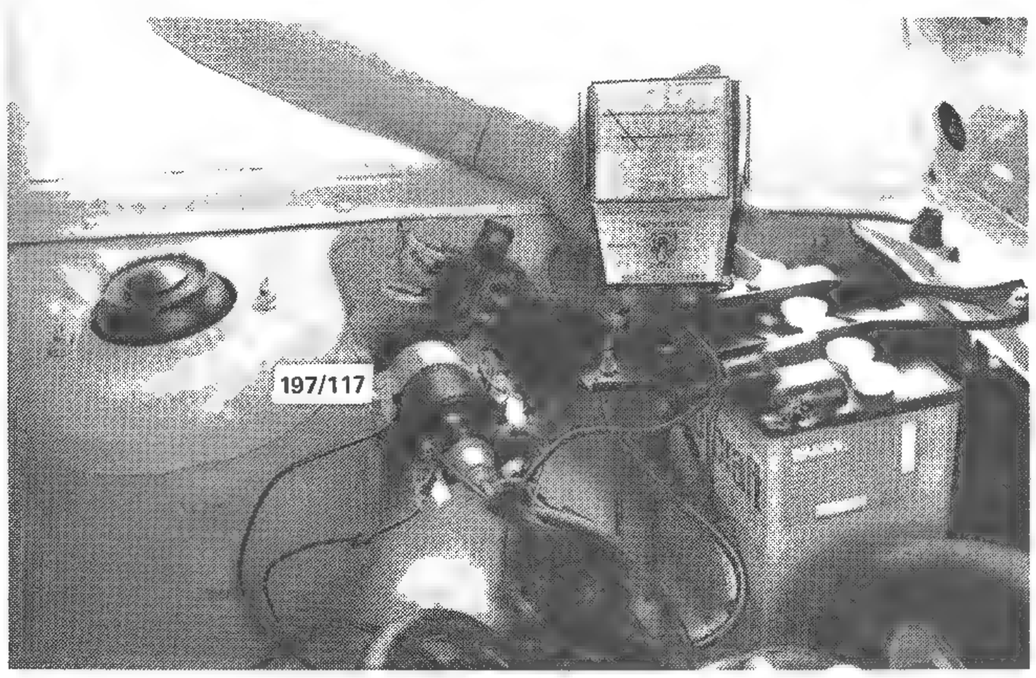

Check the distributor dwell angle using a dwell meter.

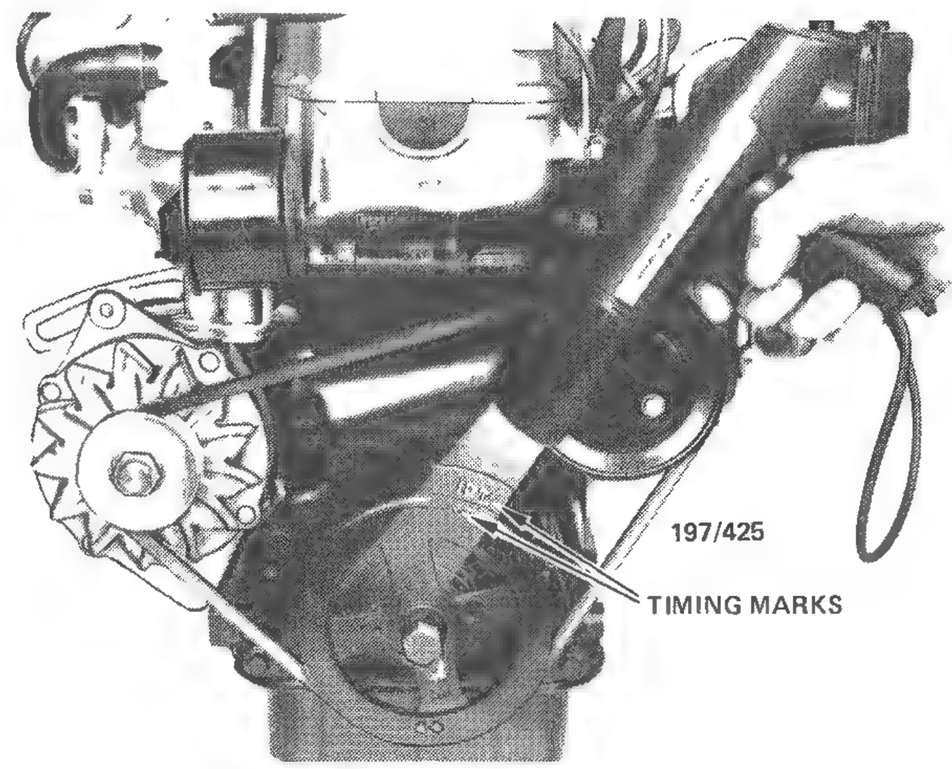

Checking the ignition timing using a timing light.

If the dwell angle variation is excessive the following points should be checked and the necessary components renewed:

Excessive side play in distributor shaft.
Distributor cam worn.
Faulty contact points.

NOTE: The ignition timing should always be checked after adjusting or renewing contact breaker points.

(5) Do not disconnect the vacuum line from the distributor vacuum advance unit.

(6) To check the ignition timing, start the engine and run it at normal operating temperature and at the specified idle speed. Observe with the timing light that the specified mark on the timing cover lines up with the mark on the crankshaft pulley.

(7) If necessary adjust the timing position by loosening the distributor anchor plate mounting bolt and rotating the distributor body in the adjusting slot.

(8) After adjustment, tighten the anchor plate bolt, and if necessary reset the idle speed.

(9) Switch off the engine and disconnect the test equipment.

TO ADJUST VALVE CLEARANCE

The valve clearance must be adjusted with the engine hot.

Ensure that the engine is in fact at normal operating temperature. If necessary run the engine at a fast idle to obtain the correct temperature.

(1) Remove the air cleaner assembly, the rocker cover, and to make the engine easier to turn over, remove the spark plugs.

(2) If necessary (at intervals of 40,000 km) retension the cylinder head bolts as outlined in the Engine section.

(3) Rotate the engine clockwise as viewed from the front of the engine, until the number one piston is on tdc on the compression stroke. In this position the tdc mark on the crankshaft pulley will be aligned with

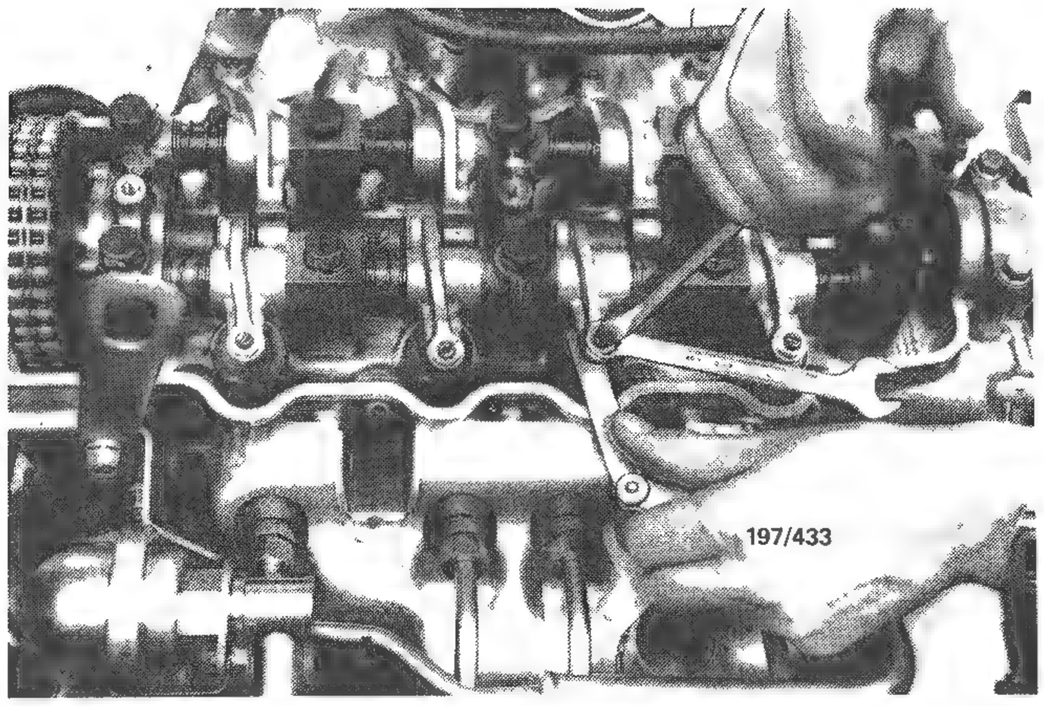

Adjusting the exhaust valve clearance of No. 3 cylinder. Note the operator is checking the clearance on the valve stem side.

the 'T' mark on the timing cover and the two valves of number four cylinder will be on the rock. (That is, one just closing and one just opening.)

NOTE: Never turn the engine against the normal direction of rotation or anti-clockwise as viewed from the front of the engine.

Check the valve clearances before carrying out any adjustments.

(4) Hold the adjusting screw of the exhaust rocker arm of number one cylinder with a screwdriver while slackening its locknut with a spanner.

(5) Back off the adjusting screw and with the correct thickness feeler gauge positioned between the adjusting screw and the valve stem, adjust the screw until the feeler gauge is a light sliding fit between the adjusting screw and the valve stem.

(6) Hold the screw securely while tightening the locknut.

(7) Check with the feeler gauge to ensure that the clearance has not altered while the locknut was being tightened.

(8) Using the same procedure adjust the clearance on number one cylinder inlet valve.

NOTE: If it is found more convenient to the operator, the valve clearance may be checked at the camshaft end of the rocker arms instead of the valve stems. Where this procedure is adopted the clearance should be reduced. See Specifications.

(9) With the valves of number one cylinder correctly adjusted, rotate the engine in the normal direction of rotation until the valves on number two cylinder are rocking.

With the valves of number two cylinder in the rocking position adjust both valves of number three cylinder.

NOTE: With the valves of number two cylinder rocking number three cylinder piston is on tdc on the compression stroke.

(10) With the valves of number three cylinder correctly adjusted, rotate the engine in the normal direction of rotation until the valves of number one cylinder are rocking.

With the valves of number one cylinder rocking adjust both valves of number four cylinder.

NOTE: With the valves of number one cylinder rocking number four cylinder piston is on tdc on the compression stroke.

(11) With the valves of number four cylinder correctly adjusted, rotate the engine in the normal direction of rotation until the valves of number three cylinder are in the rock position.

With the valves of number three cylinder in the rock position adjust the valves of number two cylinder.

(12) With all the valves correctly adjusted instal the rocker cover to the engine using a new gasket. Tighten the rocker cover securely.

(13) Instal the spark plugs and the air cleaner assembly.

(14) Start and run the engine and check for oil leaks. Rectify as necessary.

TO ADJUST IDLE SPEED

NOTE: Before adjusting the idle speed ensure that the following conditions are met:

The air cleaner element is clean and in a serviceable condition.

The distributor breaker points and ignition timing are correctly set.

The fuel float level is correct and the choke valve is fully open.

(1) Connect a reliable tachometer, start the engine and bring it to normal operating temperature. Firmly apply the handbrake.

(2) Adjust the engine idle speed to Specifications by turning the throttle stop screw.

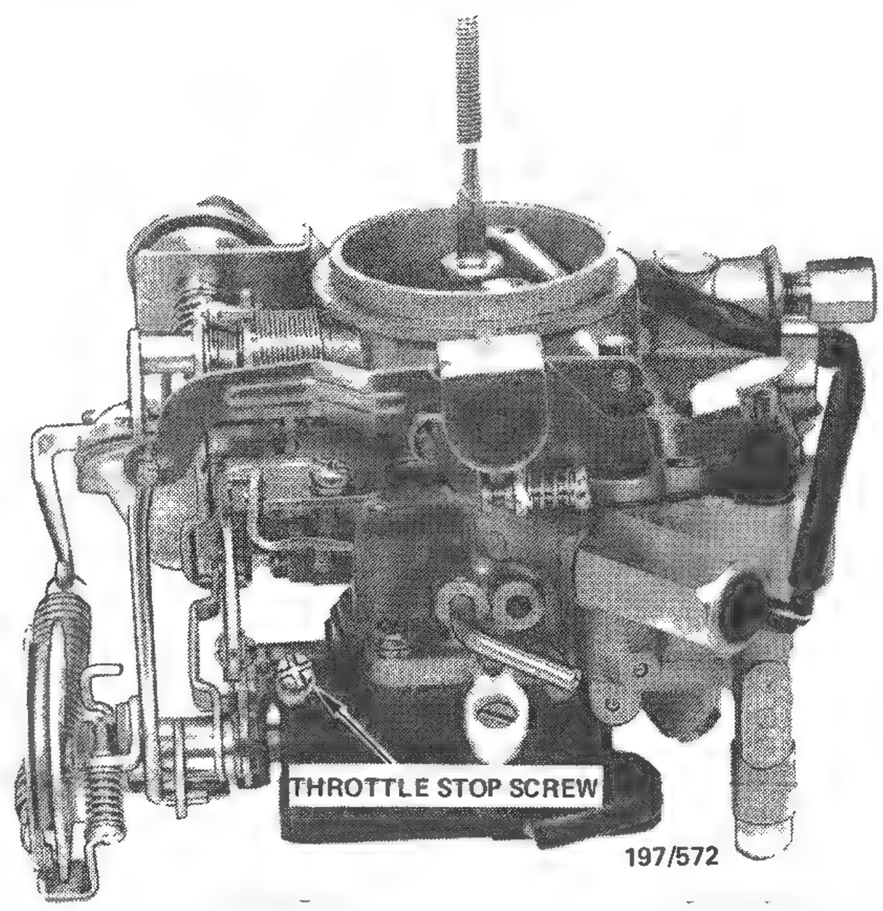

View of carburettor showing the location of the throttle stop screw.

(3) Road test the vehicle and readjust the idle speed as necessary.

NOTE: The idle mixture is preset at the factory to comply with the exhaust emission control regulations. No attempt should be made to adjust the mixture.

TO ADJUST DRIVE BELTS

It is essential that all drive belts be adjusted to prevent slip but without imposing excessively upon the component bearings, particularly the alternator or water pump bearings.

The drive belt should be adjusted using the following procedure:

(1) Using finger and thumb pressure push firmly on the belt concerned in the middle of the longest run to assess deflection. See Specifications.

(2) If necessary loosen the accessory mounting and adjusting bolts and move the accessory in the adjustment slot provided to achieve the correct drive belt tension.

(3) When the correct drive belt tension is obtained tighten the accessory mounting and adjusting bolts securely.

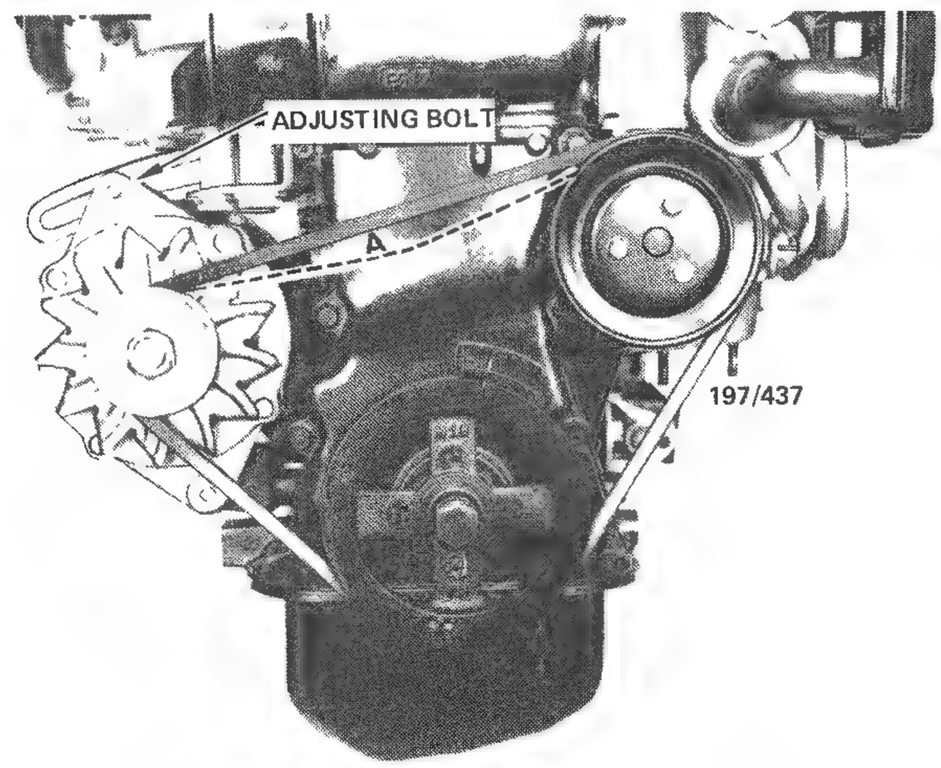

The drive belt should be adjusted so that there is a deflection of 12–14 mm at point A.

This section deals with the common causes of engine failure to start, as inevitably there will come a time when every driver will experience this problem and will therefore, need to call upon his own resources to rectify the trouble. Roadside breakdowns other than engine failure can be identified by reference to the trouble shooting chart on the particular component affected.

1. TROUBLE SHOOTING

Trouble shooting is only a process of elimination and provided the procedure is carried out correctly and systematically an accurate diagnosis of the trouble can be made in the minimum amount of time.

For an internal combustion engine to run there are three basic requirements, these are, ignition, fuel and compression. There are other factors of course, but as a rule an engine's failure to start can be attributed to a fault in one or more of these three systems.

Reports from field engineers of motoring organisations prove that the biggest percentage of engine breakdowns are in the order of ignition or electrical failure first, followed by fuel, with mechanical or compression failure the least common.

Should the engine fail to start, first check that there is adequate fuel in the tank and if so, carry out the following checking procedures in the order described.

2. TO CHECK IGNITION AND ELECTRICAL SYSTEMS

(1) Switch on the ignition and check for warning lamp illumination on the instrument cluster.

(2) Operate the starter switch and check that the starter rotates the engine at a steady speed.

(3) Switch on the headlamps and check for good light intensity.

Should the lamps not illuminate or the starter motor not turn the engine, carry out the following action:

(a) Remove the battery terminals and clean both terminals and posts. Refit the terminals and tighten firmly but not excessively.

(b) Check that the earth lead from the battery to the engine or body frame is not broken and that the connections are clean and secure.

(c) Check that the lead from the battery to the starter motor or starter solenoid is intact and with a clean and secure connection.

(d) Where necessary carry out repairs to (b) and (c).

Again carry out the check procedure. Should the starter motor still not operate, or the lamps illuminate, then one or more of the following faults may be the cause:

No starter motor operation or lamps: Battery flat or defective.

Lamps illuminate but no starter operation: Starter motor drive jammed in mesh with flywheel ring gear. Starter motor or solenoid defective. Ignition/starter switch faulty.

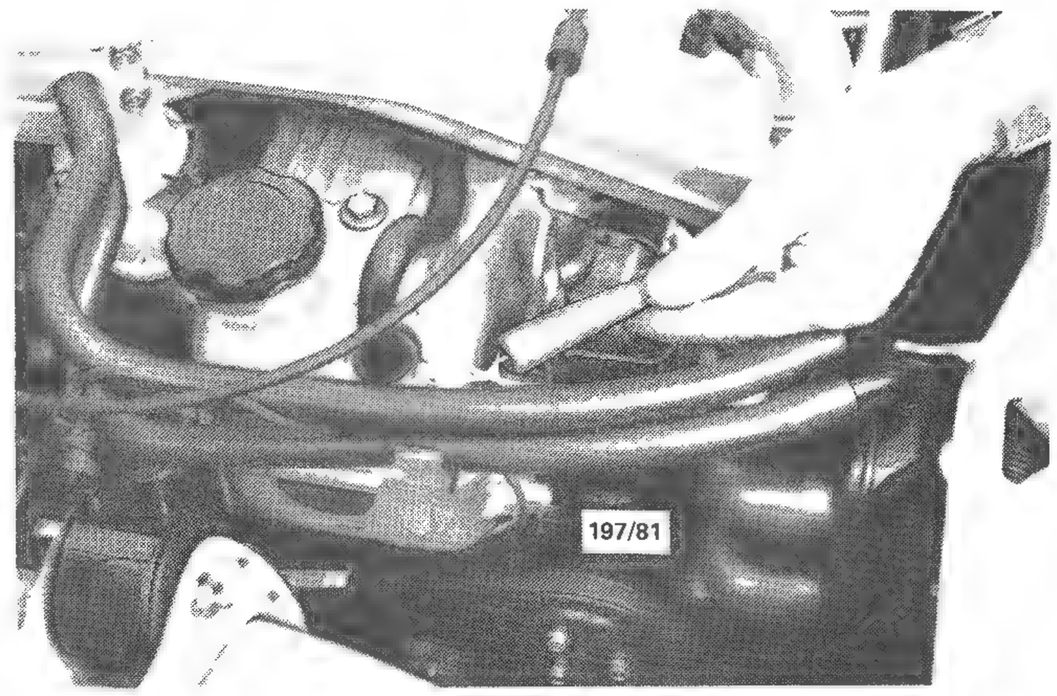

Checking for spark at spark plug high tension lead. Note split pin which can be used to extend recessed terminals.

NOTE: On automatic transmission models, also check the operation of the neutral safety switch.

Lamps dim and starter operation sluggish: Discharged battery or fault in starter motor. Battery flat due to broken drive belt or defective alternator. Faulty battery due to cell breakdown.

If the battery and starter motor operation proves satisfactory but the engine still fails to start, continue as follows:

(1) Disconnect a spark plug lead and position the terminal within 3 mm of the cylinder head. It may be necessary on leads fitted with terminal insulators to use a split pin or screwdriver as an extension to the terminal.

(2) Have an assistant switch on the ignition and operate the starter switch.

(3) Check that the spark, if any, jumps the gap to the cylinder head. If there is no spark or the spark is weak or yellow, carry on with point (4). If the spark is satisfactory proceed to point (5).

(4) Disconnect the coil lead from the distributor cap and carry out the check procedure previously described for the spark plug lead in points (1) to (3). If there is a strong blue spark then the fault lies within the distributor.

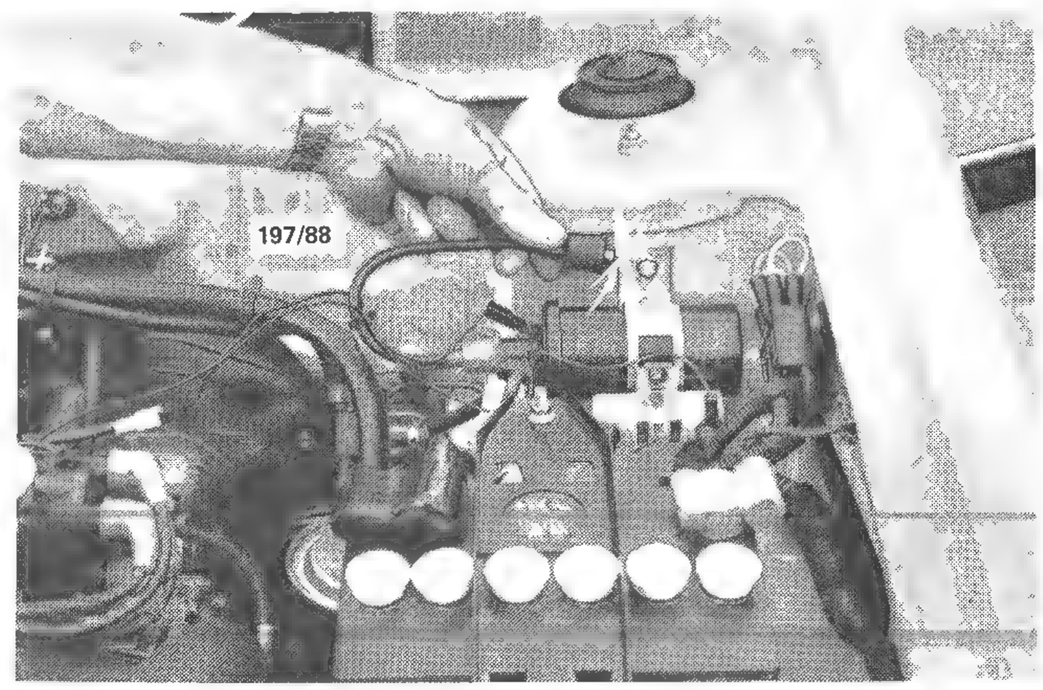

Checking for spark at the coil high tension lead.

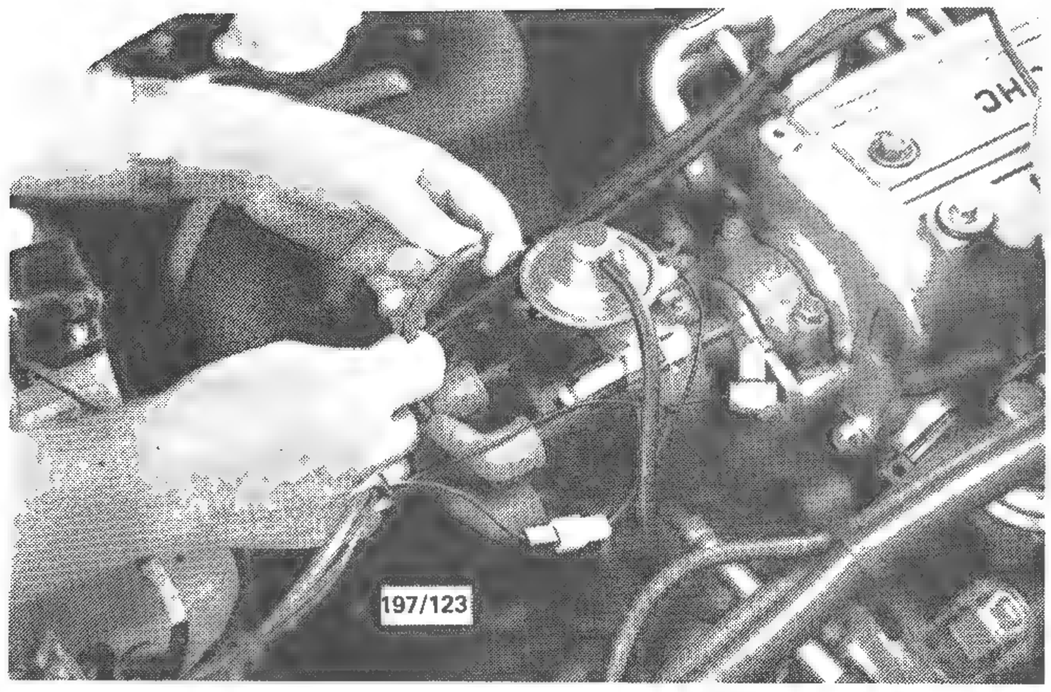

Check the high tension leads for perishing or cracking. Also check the lead ends for burning.

Should there be no spark or a weak and yellow spark on both or either of the tests, then carry out the following action:

(a) Check the spark plug leads to ensure that they are perfectly dry and that the insulation is not cracked.

(b) Check the distributor cap to ensure that it is dry and clean. Examine both inside and outside of the cap for cracks or tracking, particularly between the spark plug segments in the cap.

(c) Check the rotor arm for cracks, deposits and burning on the metal arm.

(d) Ensure that the spark plug leads and the coil lead have dry, clean and secure connections in the distributor cap.

(e) Check that the carbon brush in the centre of the distributor cap interior face is clean and dry and ensure that where the carbon is of the spring loaded type, it moves freely in and out of its locating hole.

(f) Check that the low tension wires on the ignition coil are intact and have clean and secure connections.

(g) Check that low tension current is reaching the ignition coil when the ignition is switched 'ON' by using a test lamp between the coil low tension terminals and a good earth. Ensure that the breaker points are open or insulated when making the test. Should the test lamp light on the ignition switch side of the coil but fail to light on the contact breaker side of the coil, then it is possible that the coil primary circuit is faulty. Remove and test the coil or replace it with a known serviceable unit.

NOTE: If a test lamp is unavailable the low tension lead can be disconnected from the ignition switch side of the coil and 'flashed' to a good earth in order to check for current flow. Similarly a small screwdriver can be 'flashed' across the open breaker points to check the ignition coil and the lead from the coil to the breaker points. As in test (g) ensure that the ignition switch is in the 'ON' position.

(h) Check and if necessary clean and adjust the contact breaker points. See the appropriate heading in the Engine Tune-up section.

(i) Ensure that the distributor low tension leads and the earth wire are intact, clean and secure.

Again carry out the check procedure. Should there still be no spark or a weak and yellow spark, then one or more of the following faults may be the cause:

Defective coil, capacitor or plug leads. If the contact breaker points showed severe burning or pitting of the point faces in the previous check then this would indicate a possible capacitor failure. Renew the capacitor and contact breaker points.

(5) If the above checks prove the spark to be satisfactory but the engine still fails to start, remove all the spark plugs and check their condition and electrode gap against the information given in the Engine Tune-up section under the appropriate heading.

3. TO CHECK THE FUEL SYSTEM

(1) Assuming that the fuel tank does contain a quantity of clean fuel the first test is to determine if there is fuel in the carburettor float chamber. To do this, remove the air cleaner assembly and look down the carburettor throat with the choke valve open. While looking

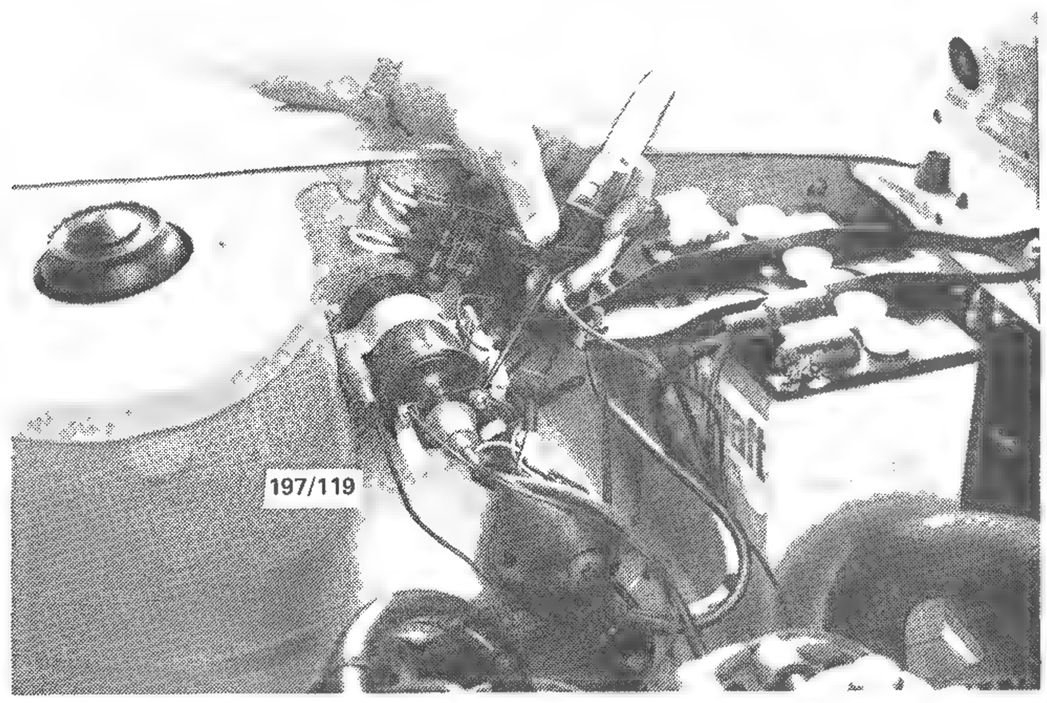

Checking for current at the ignition switch side of the coil.

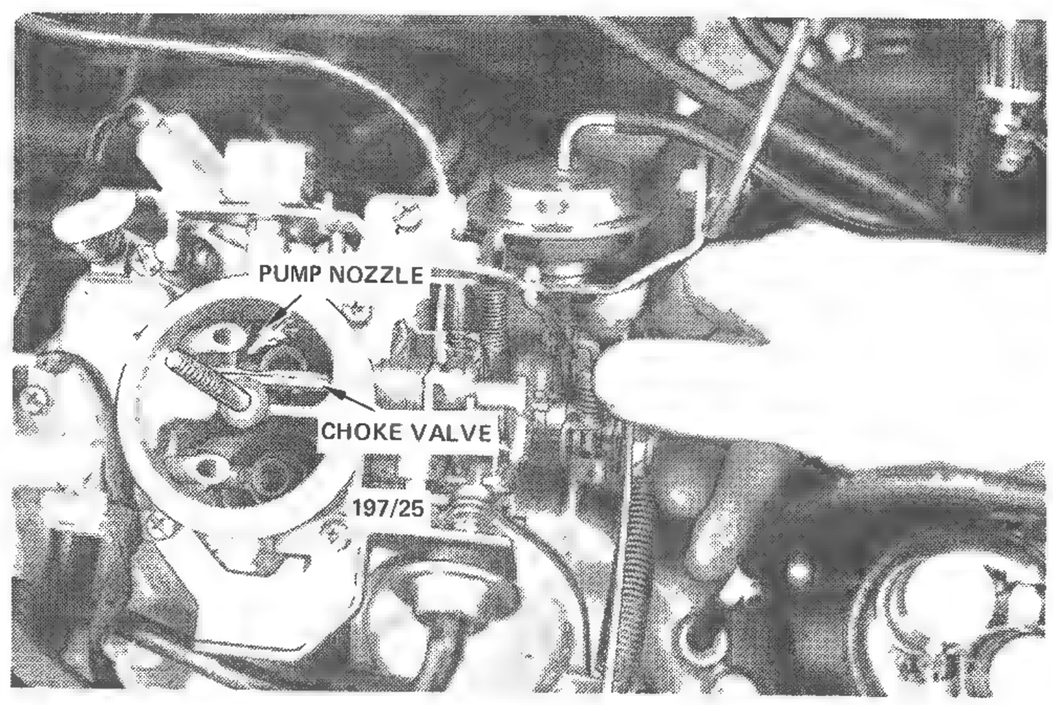

Check for discharge of fuel at carburettor accelerator pump nozzle by actuating the throttle linkage by hand.

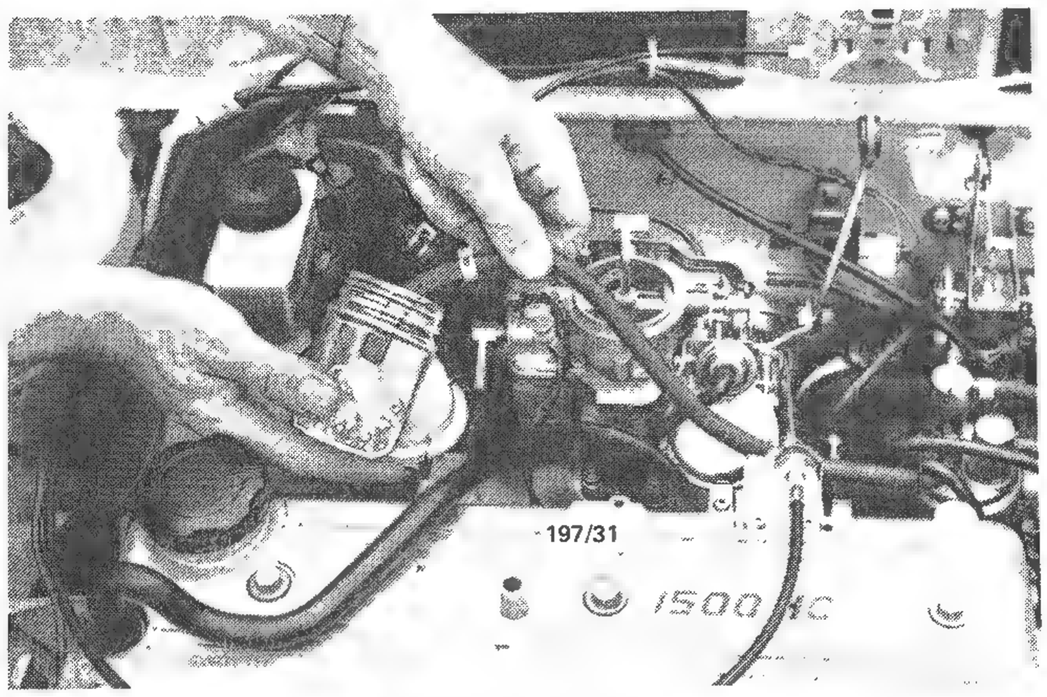

Checking for fuel flow at carburettor supply hose.

down the carburettor throat open and close the throttle several times by actuating the throttle linkage by hand. If squirts of fuel are seen to discharge from the accelerator pump nozzle, it is an indication that the carburettor float chamber is full and that the fuel system is functioning correctly.

If on the other hand no fuel was being discharged from the accelerator pump nozzle then proceed as follows:

(2) Pull the lead out of the top of the ignition coil or remove the distributor rotor arm to prevent the engine from possibly starting during the next test.

(3) Disconnect the fuel supply hose at the carburettor and position the end of the hose in a suitable container. Have an assistant operate the starter and note if fuel is being discharged into the container. Proceed to point (7) if fuel flow is satisfactory, if not, continue with points (4) to (6).

(4) Disconnect the fuel supply hose from the fuel tank side of the fuel filter.

(5) Remove the fuel tank filler cap and have an assistant listen at the tank filler aperture. Blow down through the fuel hose towards the tank and provided the hose is clear, air bubbles will be heard in the tank.

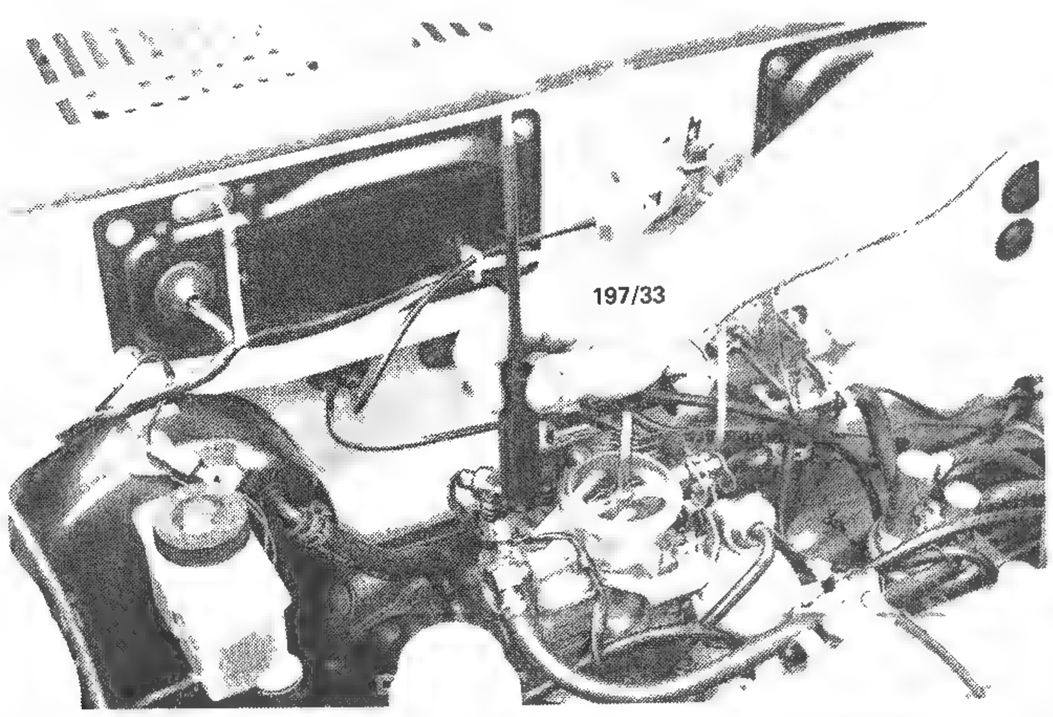

Float chamber flooding can sometimes be rectified by tapping the carburettor float chamber in the vicinity of the needle valve and seat.

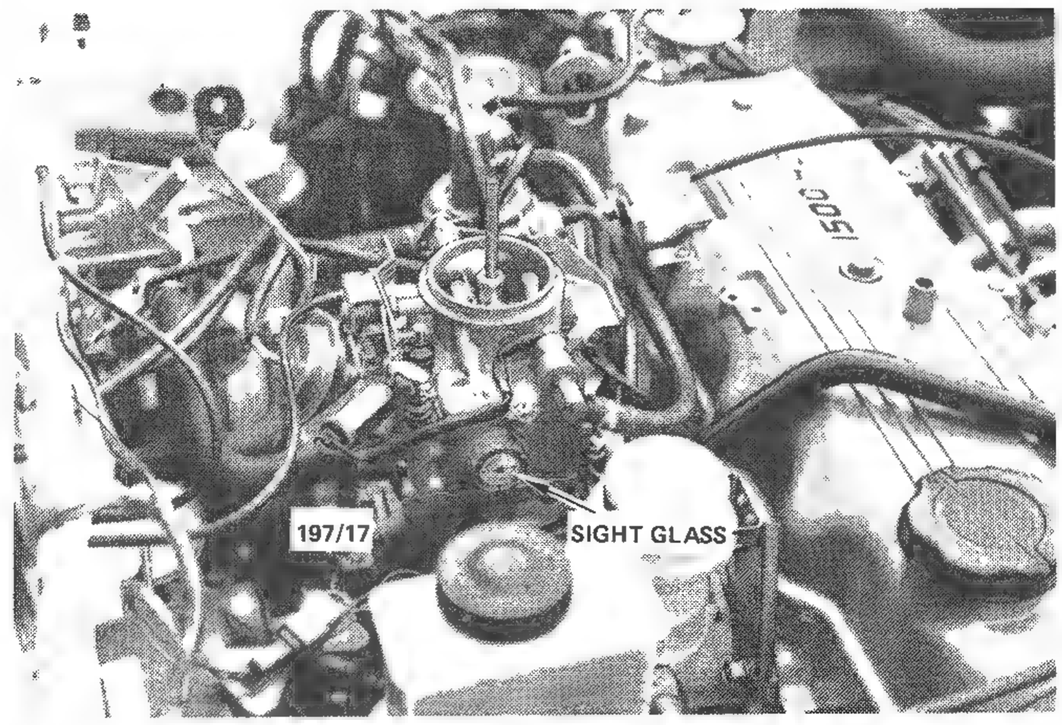

Check for correct fuel level in the float chamber by looking through the sight glass.

(6) Reconnect the fuel hose to the pump and again check for fuel delivery from the fuel pump.

If there is no delivery of fuel to the carburettor side of the fuel pump then one or more of the following faults may be the cause:

No air bubbles heard on tank test: Fuel line obstructed or fractured.

Air bubbles heard in tank but no delivery from fuel pump: Faulty fuel pump. Refer to the appropriate heading in the Fuel System section of this manual for test procedure. Also check that the fuel filter in not blocked.

(7) Should there be a satisfactory supply of fuel at the carburettor end of the fuel hose but the engine will still not start, carry out the following additional procedure:

(a) First check that flooding is not the cause due to excessive use of choke or accelerator when attempting to start the engine.

(b) Remove the spark plugs and check for petrol saturation of the electrodes. If evident thoroughly clean and dry before replacement.

(c) If flooding persists, check the float and needle valve for sticking and also ensure that the float is not punctured allowing it to fill with the fuel.

NOTE: Visually inspect the fuel level through the carburettor sight glass. The fuel in the float chamber should be level with the dot on the sight glass.

(d) Check the air cleaner for a choked filter element.

If flooding is not the cause and there is adequate supply of fuel to the carburettor, one or more of the following faults may be the cause:

Stuck or obstructed needle valve.

Choke valve not operating correctly.

Air leaks around the inlet manifold or carburettor mounting flanges because of distortion or defective gaskets.

Fractured hoses or loose connections between the brake servo unit and the inlet manifold.

4. TO CHECK THE MECHANICAL SYSTEM

The following procedure assumes that the starter motor will rotate the engine. If not, press in the clutch to disengage the engine from the transmission in case the fault lies within the transmission. If the starter will still not rotate the engine it will be necessary to remove the starter motor and attempt to turn the engine over manually. This will establish whether the fault lies in the starter motor which could be jammed or defective, or the engine, which could be seized or have broken internal components such as connecting rods, pistons and crankshaft, etc. If the starter motor is not at fault and the engine will not rotate manually then refer to the heading Engine Mechanical Trouble Shooting in the Engine section for possible causes.

It should be noted that the only way that compression can be accurately tested is by means of a compression test gauge. The crude method described in the following check procedures is only intended to give a rule of thumb indication when checking for causes of engine breakdown.

(1) Remove the radiator cap and check for loss of coolant from the radiator. If so, check carefully for any indication of external leakage and, remove the engine oil dipstick and check for emulsification of the oil. When water mixes with oil it will turn creamy and the oil level will also have increased. If the oil is emulsified the following checks are not required.

(2) Isolate the ignition by disconnecting the high tension lead from the top of the coil. Remove each spark plug in turn and firmly block the spark plug hole with the pad of the thumb. Have an assistant fully open the throttle and operate the starter switch to rotate the engine. Check that the compression pressure is strong enough to force past the thumb sealing the spark plug hole and also examine the thumb and the spark plug previously removed for indications of water.

If the above checks show a loss of water and this is evident in the engine oil or on the thumb or spark plug, then one or more of the following faults may be the cause:

Blown cylinder head gasket.

Cracked cylinder or cylinder head.

Warped cylinder head or cylinder block faces.

If the crude compression check showed any weak, lack of, or inconsistant compressions, then any of the above faults could be the cause plus the following:

Broken piston(s).

Burnt or broken valves.

Provided the previous checks do not indicate an internal leakage of water continue with the following:

(3) Remove the distrubutor cap and, with an assistant operating the starter switch, check that the rotor arm rotates as the engine turns over.

(4) Remove the rocker cover and, again with the assistant operating the starter switch, check that all the valves open and close as the engine turns over.

If the rotor arm or the valves do not operate with engine rotation then one of the following faults may be the cause:

Rotor arm does not turn but valves operate: Distributor drive shaft broken.

Rotor arm and valves do not operate: Broken timing chain. Sheared drive key in crankshaft sprocket or camshaft sprocket.

Provided all the previous checks have been carried out correctly and the operator is quite satisfied that none of the components are at fault then all that remains is for the ignition and valve timing to be checked. It should be noted however, that if loss of timing proves to be the fault then the cause for this occurring must be sought, if the vehicle has started and run satisfactorily up to the point of the engine failure.

NOTE: In order to check the ignition and valve timing it will be necessary to remove the distributor cap and rocker cover and to turn the engine clockwise via the crankshaft pulley until No. 1 piston is at tdc on the compression stroke. In this position the valves of No. 4 cylinder should be 'rocking' and the distributor rotor should be pointing to the No. 1 high tension lead segment in the distributor cap.

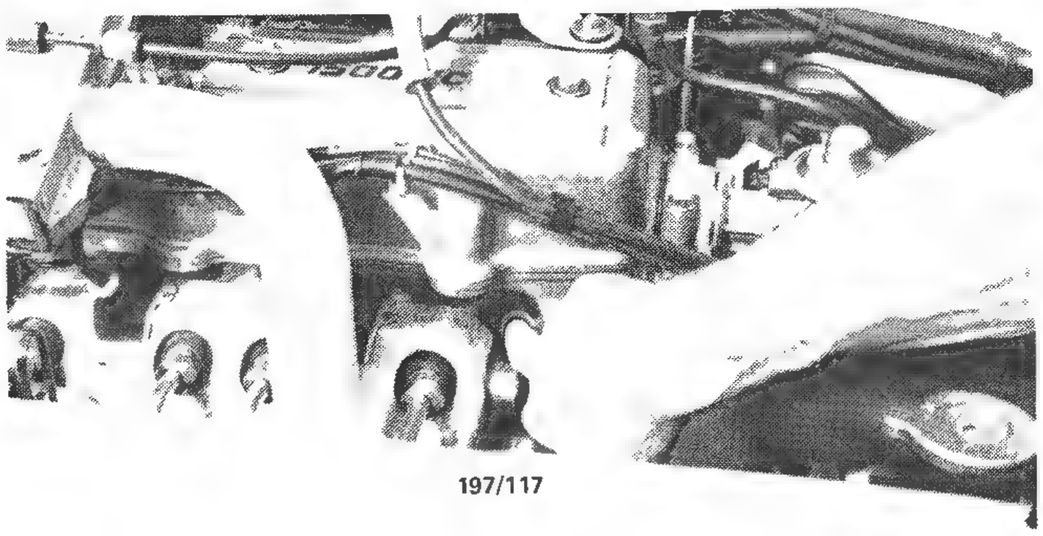

Rule of thumb method of checking the cylinder compression.

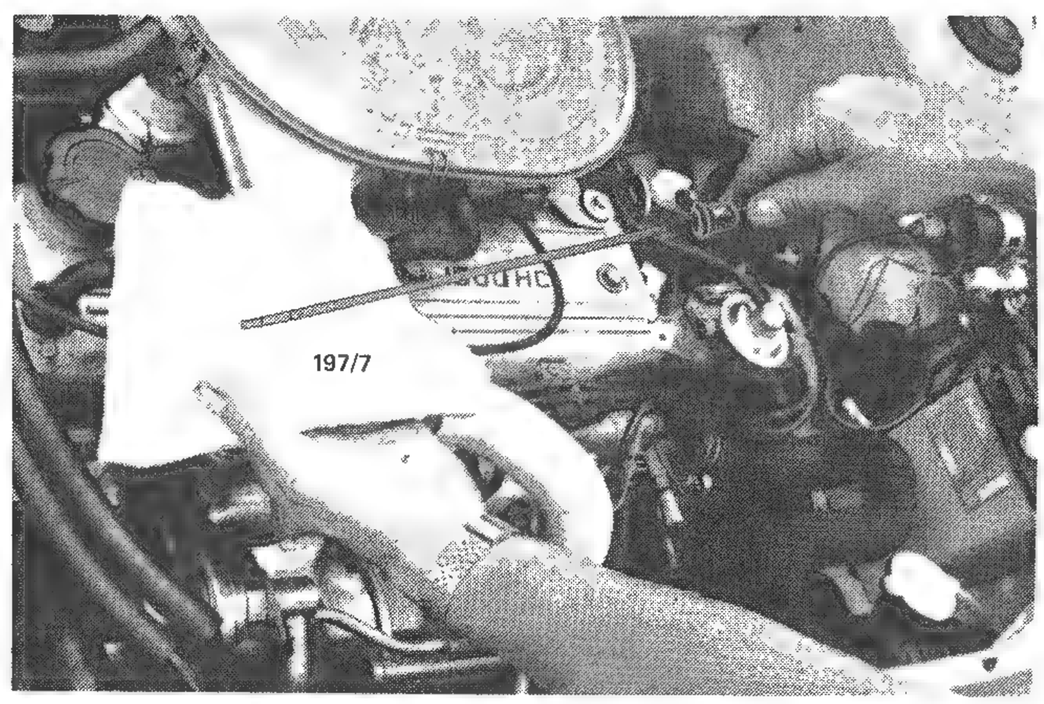

Check the engine oil for emulsification on the dipstick.

SPECIFICATIONS

ENGINE ASSEMBLY

Type ..... 4 cyl OHC
Models ..... 1.3 litre, 1.5 litre

Capacity:
- 1.3 litre ..... 1,296 cc
- 1.5 litre ..... 1,490 cc

Bore ..... 77 mm

Stroke:
- 1.3 litre ..... 69.6 mm
- 1.5 litre ..... 80.0 mm

Compression ratio:
- 1.3 litre ..... 9.2 : 1
- 1.5 litre ..... 9.0 : 1

NOTE: Specifications regarding engine performance are listed in the Engine Tune-up section.

CYLINDER HEAD

Type ..... One piece
Material ..... Aluminium alloy
Valve seat angle ..... 45 deg
Valve seat width ..... 1.4 mm
Valve guide type ..... Replaceable
*Cylinder head height ..... 90.5 mm
Cylinder head warp limit ..... 0.15 mm
Cylinder head machining limit ..... 0.2 mm
*Measurement from cylinder head face to rocker cover gasket face.

VALVES AND SPRINGS

Valve head diameter:
- Inlet ..... 35.95–36.05 mm
- Exhaust ..... 30.95–31.05 mm

Valve stem diameter:
- New (nominal) ..... 8.025–8.045 mm
- Wear limit, inlet ..... 7.98 mm
- Wear limit, exhaust ..... 7.97 mm

Valve stem to guide clearance:
- New (nominal) ..... 0.018–0.053 mm
- Wear limit ..... 0.2 mm

Valve face angle ..... 45 deg
Minimum valve head thickness ..... 1.0 mm

Free length of valve spring:
- New (nominal) ..... 43.3 mm
- Minimum ..... 42 mm

CAMSHAFT AND BEARINGS

Number of bearings 3
Maximum run out ..... 0.03 mm

End float:
- New (nominal) ..... 0.02–0.18 mm
- Maximum ..... 0.2 mm

Maximum bearing oil clearance ..... 0.15 mm

Journal diameter:
- Front and rear (nominal) ..... 41.949–41.965 mm
- Centre (nominal) ..... 41.919–41.935 mm
- Wear limit ..... 0.05 mm

Cam lobe height:
- New (nominal) ..... 44.114 mm
- Wear limit ..... 43.914 mm

CYLINDER BLOCK

Bore diameter (standard) ..... 77 mm
Maximum bore out of round ..... 0.09 mm
Maximum bore taper ..... 0.09 mm
Maximum face warpage ..... 0.15 mm

CRANKSHAFT AND MAIN BEARINGS

Number of main bearings 5
End float taken at ..... Rear main bearing

End float:
- New (nominal) ..... 0.10–0.15 mm
- Maximum ..... 0.3 mm

Main bearing journal diameter:
- New (nominal) ..... 49.938–49.956 mm
- Wear limit ..... 0.05 mm

Main bearing oil clearance:
- New ..... 0.023–0.042 mm
- Maximum ..... 0.08 mm

Crankpin diameter:
- New (nominal) ..... 39.940–39.956 mm
- Wear limit ..... 0.05 mm

CONNECTING RODS AND BEARINGS

Connecting rod side clearance:
- New ..... 0.11–0.262 mm
- Maximum ..... 0.3 mm

Connecting rod bearing oil clearance:
- New ..... 0.02–0.04 mm
- Maximum ..... 0.10 mm

Connecting rod bend or twist limit ..... 0.05 mm

PISTONS AND RINGS

Piston diameter (standard) ..... 76.954–76.974 mm

Piston skirt to cylinder clearance:
- New ..... 0.026–0.065 mm
- Maximum ..... 0.15 mm

Ring end gap:
- Compression ring ..... 0.2–0.4 mm
- Oil ring segments ..... 0.3–0.9 mm
- Wear limit ..... 0.10 mm

Compression ring clearance in ring groove:
- New ..... 0.03–0.07 mm
- Maximum ..... 0.15 mm

LUBRICATION

Oil pump type ..... Rotor
Oil pressure at 3,000 rpm ..... 345–400 kPa

Maximum clearance outer rotor
to pump body ..... 0.35 mm
Maximum inner rotor tip clearance ..... 0.25 mm
Maximum rotor end float ..... 0.15 mm
Free length of relief valve spring ..... 45.5 mm

TORQUE WRENCH SETTINGS

Cylinder head bolts:
Engine warm ..... 80 Nm
Engine cold ..... 80 Nm
Main bearing bolts ..... 69 Nm
Connecting rod nuts ..... 35 Nm

Manifold nuts and bolts:
Inlet ..... 26 Nm
Exhaust ..... 23 Nm
Oil pump bolts ..... 9 Nm
Timing chain cover bolts ..... 29 Nm
Camshaft sprocket nut ..... 78 Nm
Crankshaft pulley bolt ..... 118 Nm
Drive plate bolts ..... 93 Nm
Flywheel bolts ..... 88 Nm
Oil sump bolts ..... 12 Nm

1. ENGINE MECHANICAL TROUBLE SHOOTING

ENGINE MISSES AT IDLING SPEED

(1) Air leak at inlet manifold gasket: Check for air leak by applying oil around the manifold joints. Renew gasket if air leak is evident.

(2) Broken or worn piston rings: Check cylinder compressions and renew piston rings as necessary.

(3) Weak or broken valve springs: Remove rocker cover and check condition of valve springs.

(4) Burnt valves or seats in cylinder head: Check cylinder compressions and overhaul the cylinder head as necessary.

(5) Faulty spark plugs, high tension leads or dirt in carburettor: Refer to the relevant section for possible causes.

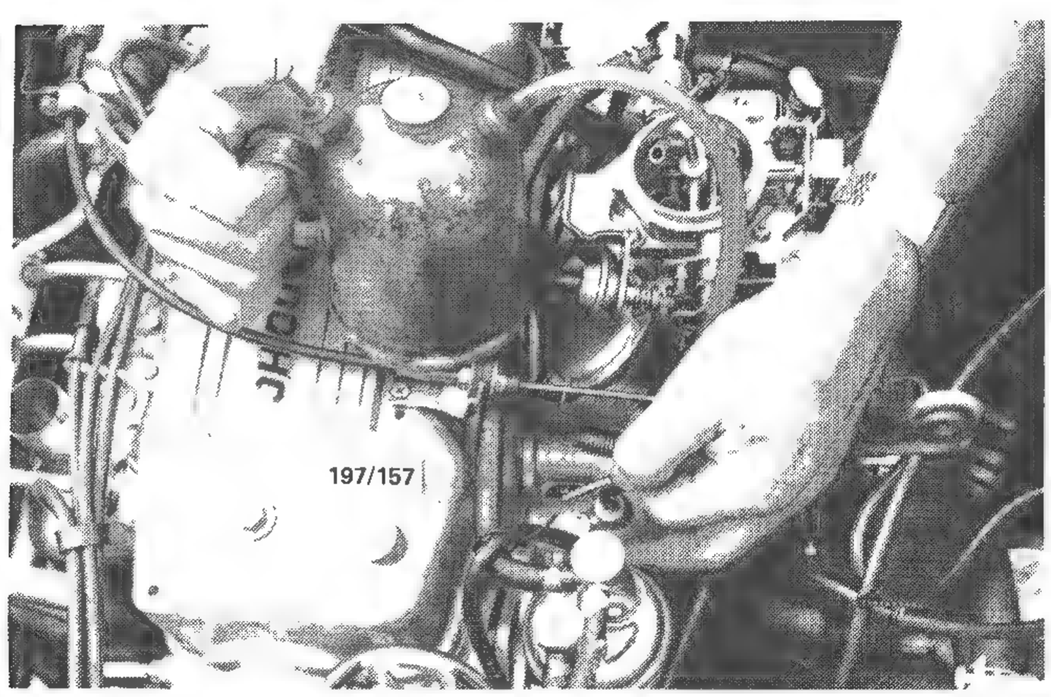

Air leaks at the inlet manifold can sometimes be located by running engine oil around the suspect joints.

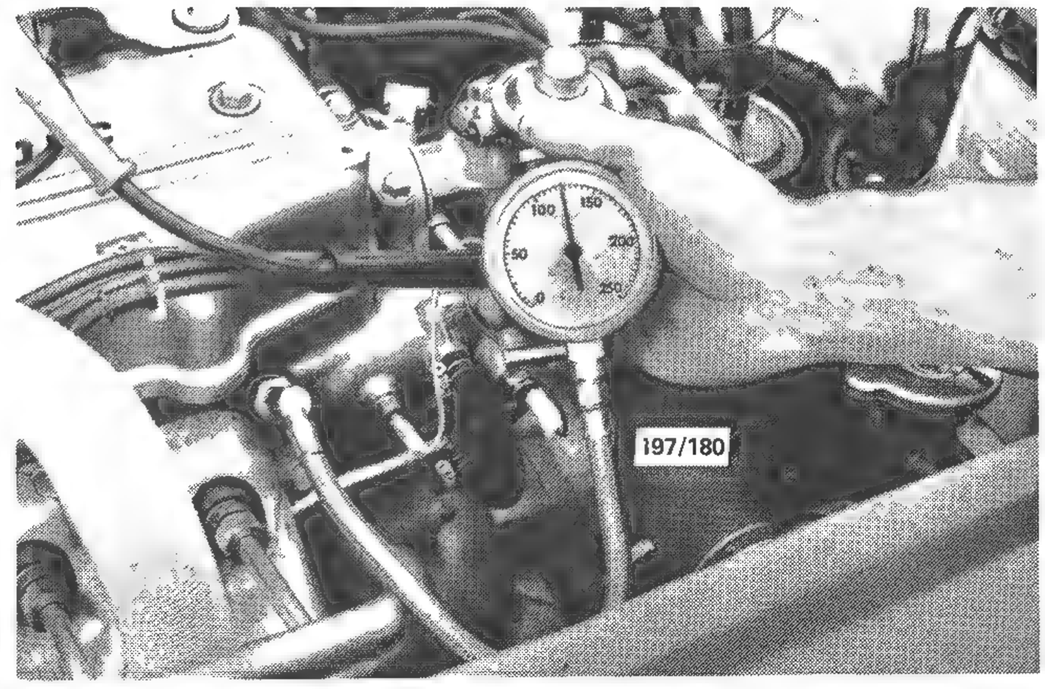

Checking the cylinder compression using a compression gauge.

NOTE: Use a compression gauge and check the mean effective pressure in each cylinder as described in the Engine Tune-up section. If a low pressure reading is obtained in one or more cylinders, first check out the valve clearance adjustment. If the valve clearance adjustment is correct remove the cylinder head for gasket and valves inspection. Should the cylinder head and gasket prove satisfactory inspect the cylinder bores, pistons and rings.

NOISY VALVE OPERATION

(1) Incorrectly adjusted valve clearance: Check and adjust the valve clearances as described in the Engine Tune-up section.

(2) Weak or broken valve springs: Remove rocker cover and check condition of valve springs.

(3) Worn valve guides: Overhaul the cylinder head as described in this section.

(4) Worn rocker gear: Remove and dismantle rocker gear and check components for wear. Renew faulty components.

NOTE: Camshaft lobe wear is also a cause of noisy valve operation.

BIG END BEARING NOISE

(1) Lack of adequate oil supply: Check oil level in sump. Check condition of oil pump and relief valve. Renew oil filter.

(2) Excessive bearing clearance: Renew bearing shells, check and regrind big end journals if oval.

(3) Thin oil or oil diluted with petrol or water: Change to correct oil grade. Check for source of oil dilution and rectify.

(4) Low oil pressure: Check pressure relief valve.

(5) Misaligned connecting rod bearings: Align connecting rods and renew bearing shells.

NOTE: Big end bearing noise is indicated by a metallic knock which is usually loudest at approximately 60km/h with the throttle closed.

The knock can be reduced or even eliminated by shorting out the spark plug on the offending cylinder. Before dismantling the engine to inspect the connecting rod bearings check the engine oil for correct level and dilution on the dipstick. Also remove the oil pressure sender unit and connect an oil pressure gauge into the oil gallery to check the oil pressure readings.

MAIN BEARING NOISE (APPARENT)

(1) Loose flywheel: Tighten flywheel securing bolts to specified torque.

(2) Low oil pressure: Check bearing to journal clearance. Check condition of oil pump and pressure relief valve. Renew faulty components.

(3) Excessive crankshaft end play: Renew rear main bearing thrust plates.

(4) Crankshaft journals out of round and excessive bearing to journal clearance: Regrind journals and renew bearing shells.

(5) Insufficient oil supply: Replenish oil in sump to correct level.

NOTE: Main bearing noise is indicated by a heavy but dull knock when the engine is under load. The knock can be confirmed by shorting out the spark plug adjacent to the offending bearing. The knock will be less audible or will even disappear when the plug is shorted out. This test is best done with the engine running at a fast idle.

A loose flywheel is indicated by a thud or dull click when the ignition is turned off. It is usually accompanied by vibration.

Crankshaft end play noise is indicated by a sharp rap at idle speed. The crankshaft can be readily checked out for excessive end float by levering the crankshaft backward and forwards.

If the oil pressure checks out OK, remove the main bearing caps and assess the bearing clearance using the Plastigage method as outlined in this section. Ovality and wear on the main bearing journals can only be checked with a micrometer after the crankshaft has been removed.

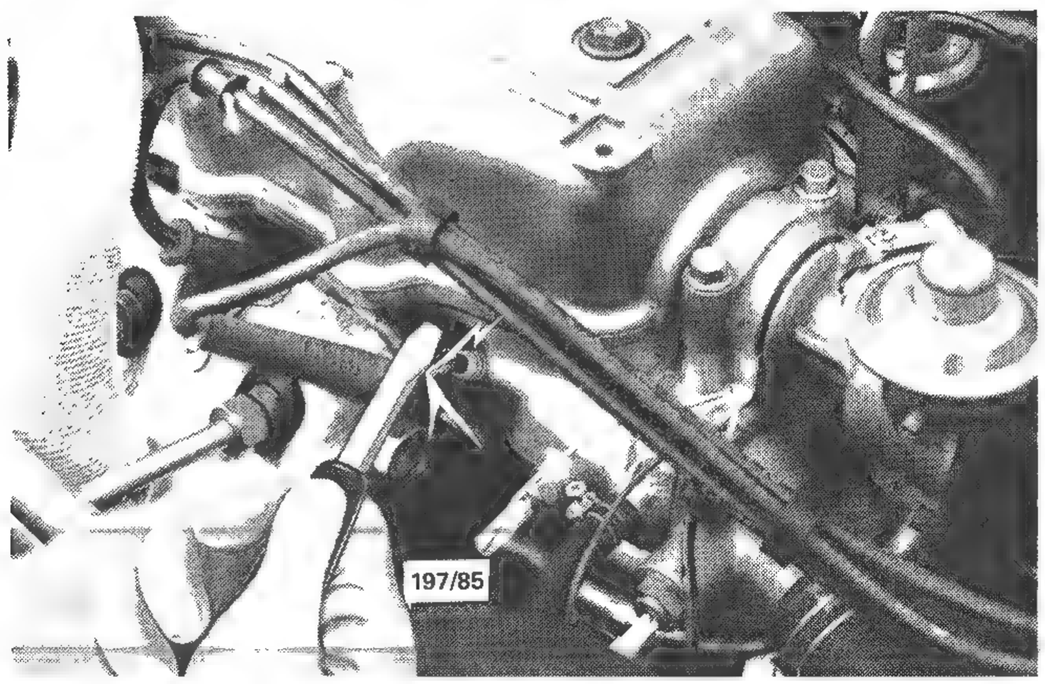

Main bearing knock can be confirmed by shorting out the spark plug adjacent to the offending bearing.

EXCESSIVE OIL CONSUMPTION

(1) Oil leaks: Check and renew engine gaskets or seals as necessary.

(2) Damaged or worn valve stem oil seals: Dismantle cylinder head and renew damaged or worn oil seals.

(3) Excessive clearance, valve stem to valve guide: Renew valve guides and valves.

(4) Worn or broken piston rings: Renew piston rings on all pistons.

(5) Rings too tight or stuck in grooves: Renew piston rings and clean out ring grooves.

(6) Excessive wear in cylinders, pistons and rings: Recondition cylinders and renew pistons and rings.

(7) Compression rings incorrectly installed, oil rings clogged or broken: Renew piston rings.

Run the engine over white paper to check for oil leaks.

NOTE: Before checking the engine for oil leaks the engine should be completely degreased and cleaned. Run the engine at operating temperature for a period and then visually check for oil leakage. By placing white paper on the floor directly beneath the engine any excessive leak can be readily pinpointed.

Damaged or worn valve stem oil seals which allow oil to be drawn down past the valve stems into the combustion chamber can be diagnosed by allowing the engine to idle for a few minutes and then opening the throttle. If oil is being drawn down past the valve stems a heavy discharge of blue smoke will be seen at the tail pipe.

Piston ring and cylinder bore troubles are usually acompanied by a loss of compression. Cylinder compression can only be accurately assessed by using a compression gauge.

DROP IN OIL PRESSURE

(1) Low oil level in sump: Check and replenish oil to the full mark in sump.

(2) Thin or diluted oil: Change to correct oil grade and rectify source of dilution.

(3) Oil pump relief valve stuck or spring broken: Free up relief valve or renew broken relief valve spring.

(4) Excessive bearing clearance: Renew bearing shells or recondition crankshaft journals as necessary.

(5) Excessive wear of oil pump components: Renew oil pump.

NOTE: If the vehicle is not fitted with an oil pressure gauge, remove the oil sender unit and connect a pressure gauge into the oil gallery. Check the oil pressure with the engine cold and hot. If the oil pump or relief valve are faulty, a low oil pressure will be indicated with the engine both cold and hot. However if the bearings are at fault a fairly high pressure will be indicated when the engine is cold but a marked fall of pressure will be noted when the engine is hot.

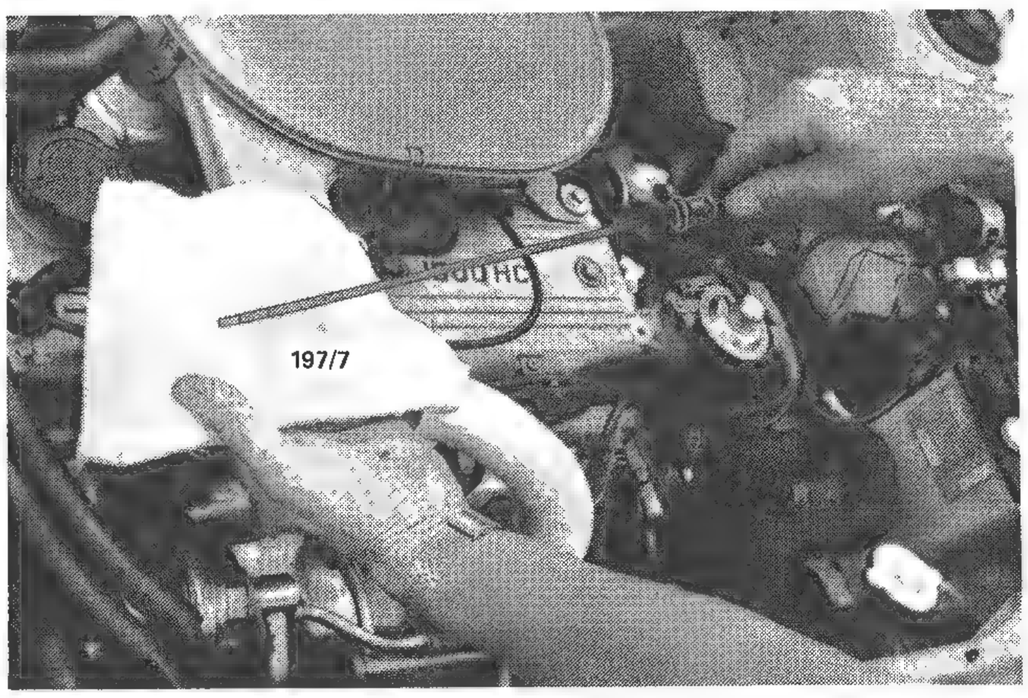

Check the engine oil for correct level and dilution on the dipstick.

ENGINE WILL NOT ROTATE

(1) Starter motor drive jammed: Remove starter motor, check and renew damaged drive or flywheel ring gear.

(2) Engine overheated and seized: Remove and dismantle engine, check and renew damaged components. See following note.

(3) Water in cylinder due to blown head gasket, cracked cylinder block or head: Remove cylinder head. If gasket is blown check for cylinder block or head warp, reface if necessary. Renew cylinder head or cylinder block if cracked.

(4) Broken crankshaft, connecting rod, piston, etc. due to overheating or fatigue: Remove and dismantle engine, examine and renew components as necessary.

(5) Valve head broken off due to overheating or fatigue: Remove cylinder head. Inspect head, piston and cylinder for damage and repair or renew as necessary.

NOTE: Frequent jamming of the starter motor drive with the flywheel ring gear can be due to a bent starter armature shaft, damaged

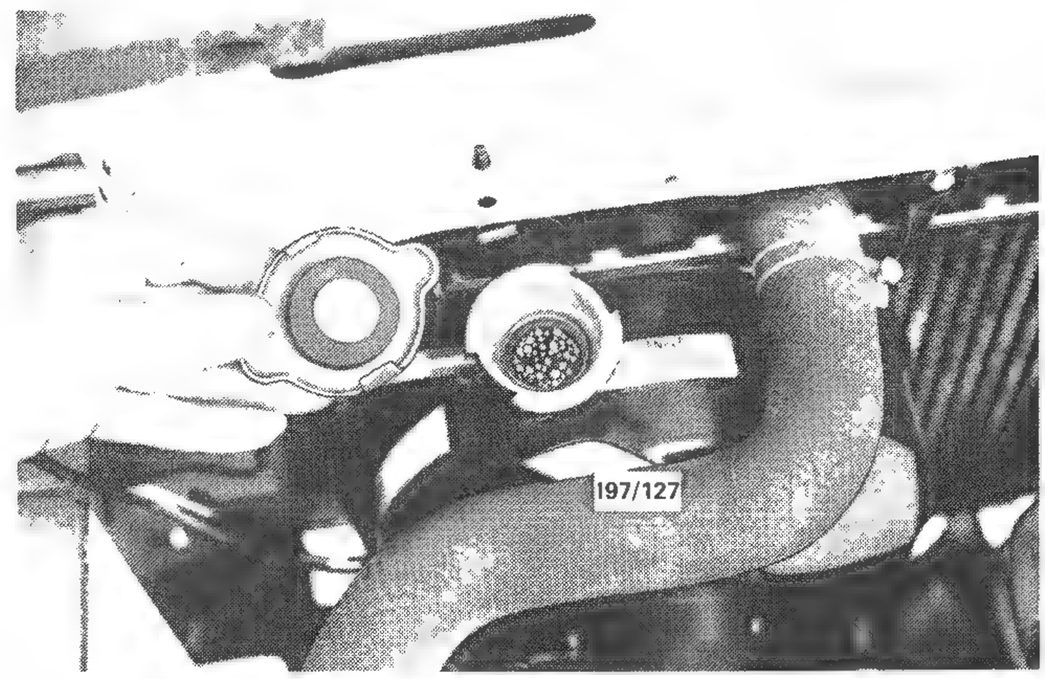

A blown head gasket is sometimes indicated by bubbles in the radiator coolant.

teeth on the drive and/or ring gear. With the starter motor removed, the flywheel ring gear teeth can be examined through the starter motor mounting aperture. Replacement of the ring gear requires removal of the transmission, clutch and flywheel on manual transmission models and the removal of the transmission and drive plate on automatic transmission models. The checking for a bent armature shaft can be done by rotating the shaft by hand while the end is held in close proximity to a fixed object.

Invariably when an engine seizes because of overheating due to lack of oil or water, damage is done to the bearings, pistons, etc. Although there may be instances where an engine will restart and run after it has cooled down and the oil and water replenished, it will generally be found that oil consumption increases, oil pressure drops and the engine will be noisier, depending upon the degree of damage.

When a cylinder head gasket blows allowing water into the cylinders, or compression loss between cylinders, it is essential to check the gasket faces on the cylinder head and block for warpage. Sufficient water can enter a cylinder because of a blown gasket,

Excessive steam at exhaust pipe indicates water leakage into the combustion chamber.

cracked cylinder block or head to prevent an engine from rotating. Normally this is preceded by difficult starting, misfiring, excessive steam from the exhaust and loss of water from the radiator. By removing the radiator cap and allowing the engine to run at a fast idle, bubbles may be seen in the top tank or alternatively, with the radiator cap on, excessive discharge of coolant from the radiator pressure relief overflow.

2. DESCRIPTION

The engine is a four cylinder in line type with a cast iron cylinder block. The five main bearings which are used to support the crankshaft are of the precision insert replaceable type.

Crankshaft end float is controlled at the rear main bearing by thrust plates which are separate from the bearing shells.

Oil leaks from the front and the rear of the crankshaft are prevented by seals which are installed in the timing cover and behind the rear main bearing. The front seal runs on the crankshaft pulley hub and the rear seal runs on the crankshaft.

The cylinder head is of alluminium alloy and has renewable valve guides. The distributor is mounted on the cylinder head and is driven by an offset tang at the rear of the camshaft. The camshaft is supported on the top of the cylinder head in three bearings which are machined equally into the rocker arm assembly caps and the cylinder head.

A long timing chain drives the camshaft from the crankshaft sprocket, chain tension is controlled by a tensioner which is operated by spring and oil pressure and also reduces chain noise. A vibration damper is mounted on the face of the crankcase to keep chain vibration to a minimum.

Connecting rods are H section forgings fitted with replaceable big end precision insert bearings.

The pistons are aluminium, with 2 solid compression rings and a three sectioned oil control ring. The gudgeon pins are a pressed fit into the connecting rods and fully floating in the piston.

The oil pump is a bi-rotor type and the force feed system is used for the engine lubricating system. The oil pump is mounted to the bottom of the crankcase, just ahead of the front main bearing cap and is driven by a chain from the crankshaft.

3. ENGINE ASSEMBLY

Special Equipment Required:
To Remove and Instal – Suitable lifting tackle

TO REMOVE AND INSTAL

(1) Raise the engine bonnet and fit fender covers to both front fenders.

(2) Remove the bonnet support from the engine compartment side panel and have an assistant hold the bonnet.

(3) Remove the 'C' clips and washers from the bonnet hinge pins, withdraw the hinge pins and carefully remove the bonnet from the vehicle.

(4) Disconnect the battery terminals and remove the battery and battery retaining bracket from the vehicle.

(5) Drain the engine coolant and remove the radiator and hoses from the vehicle. If necessary refer to the Cooling System section for the correct procedure.

NOTE: When a radiator that has been in use for some time is removed from a vehicle for repairs to the engine, it should not be allowed to stand empty for any length of time, but should be immersed in a tank of water or otherwise kept full. Failure to observe this precaution may result in over-heating when the engine is put back into service.

This is caused by internal deposits in the radiator drying and flaking and so obstructing the circulation of the cooling system.

(6) Remove the air cleaner assembly and hot air hose from the vehicle. If necessary refer to the Fuel System section.

NOTE: After removal of the air cleaner, cover the carburettor to prevent the entry of dirt.

(7) Disconnect the accelerator cable and the manual choke control cable from the carburettor.

(8) Disconnect the coil high tension lead and the low tension wire from the distributor.

(9) Disconnect the wires from the alternator B+ terminal and the terminal block on the alternator.

(10) Disconnect the wires from the oil pressure switch, the temperature sender unit and the thermoswitch. Remove the wiring from the retaining clips and position it away from the working area.

(11) Disconnect the fuel hoses from the fuel pump and plug the ends of the hoses to prevent spillage.

(12) Disconnect the heater hoses from the connections at the bulkhead.

(13) Disconnect the brake servo unit vacuum hose from the brake servo unit.

(14) Disconnect the wires from the starter motor solenoid.

(15) Disconnect the hoses and wiring and remove the charcoal canister and the windscreen washer bottle from the vehicle.

(16) Disconnect the speedometer cable from the transmission, ensuring that the speedometer drive gear is sealed to prevent entry of foreign matter.

(17) Raise the front of the vehicle and support it on chassis stands, ensure that the handbrake is fully applied.

(18) Remove the bolts retaining the splash guards to the crossmember and the body. Withdraw the splash guards from the vehicle.

(19) Drain the engine and transmission oils. Instal and tighten the drain plugs after the oil has drained.

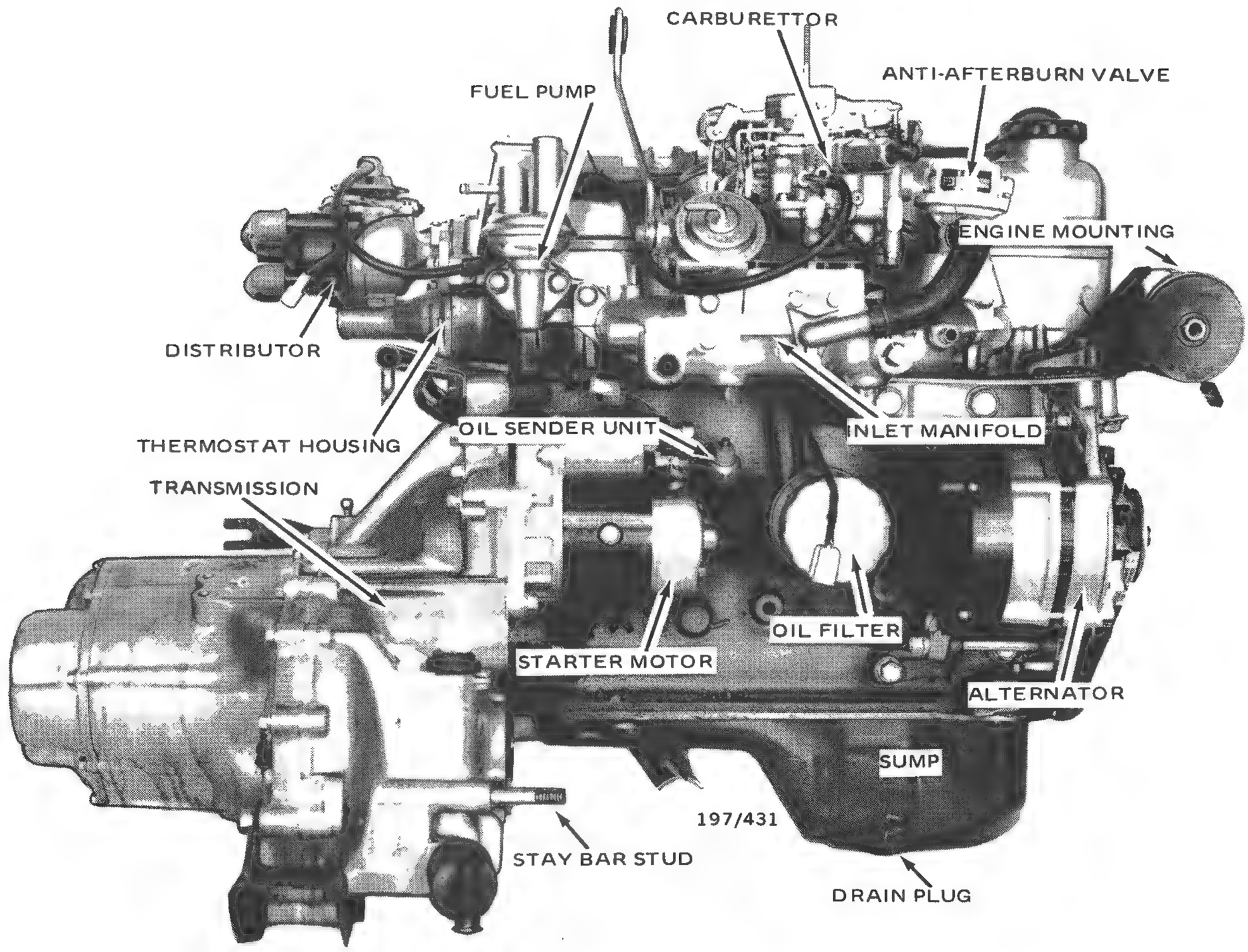

Rear view of 1.5 litre engine and manual transmission assembly.

(20) On manual transmission models remove the nut and washers retaining the gear lever assembly stay bar to the transmission and slide the stay bar of the stud.

(21) Remove the nut and washer from the gear lever control rod retaining bolt at the transmission end and withdraw the retaining bolt.

(22) Disconnect the reverse lamp switch wire connector on manual transmission models.

(23) On automatic transmission models, disconnect the oil cooler pipes and plug the ends of the pipes and the openings in the transmission to prevent the entry of dirt and the leakage of oil.

(24) Disconnect the neutral safety switch wiring connector, the vacuum diaphragm vacuum hose and the kickdown solenoid connector on automatic tranmission models.

(25) On manual transmission models loosen the clutch cable adjusting nut to the extent where the clutch cable can be released from the clutch lever. Remove the bolts that retain the clutch cable support brackets and the earth cable to the transmission.

(26) Remove the bolts retaining the front exhaust pipe to the exhaust manifold flange. Remove the bolts retaining the exhaust pipe bracket to the cylinder block and the exhaust manifold. Lower the exhaust pipe.

(27) Remove both front road wheels from the vehicle.

(28) Remove the pinch bolts retaining the suspension control arm ball joints to the steering knuckles and release the ball joints. Push the control arms downwards.

(29) Remove both drive shafts from the transmission outwards and horizontally. Refer to the Manual Transmission and Drive Shafts section if necessary for the correct procedure.

(30) Instal suitable lifting tackle to the engine assembly and lift the engine weight just off the engine mountings.

(31) Remove the engine mounting to crossmember retaining nut and the engine mounting bracket to transmission retaining bolts. Remove the mounting assembly from the vehicle.

(32) On the rear mounting assembly, remove the engine mounting to transmission bracket retaining nut and washer.

(33) Remove the right hand side mounting to frame bracket retaining bolt nut and withdraw the retaining bolt.

(34) Remove the left hand side mounting to frame bracket retaining bolt nut and withdraw the retaining

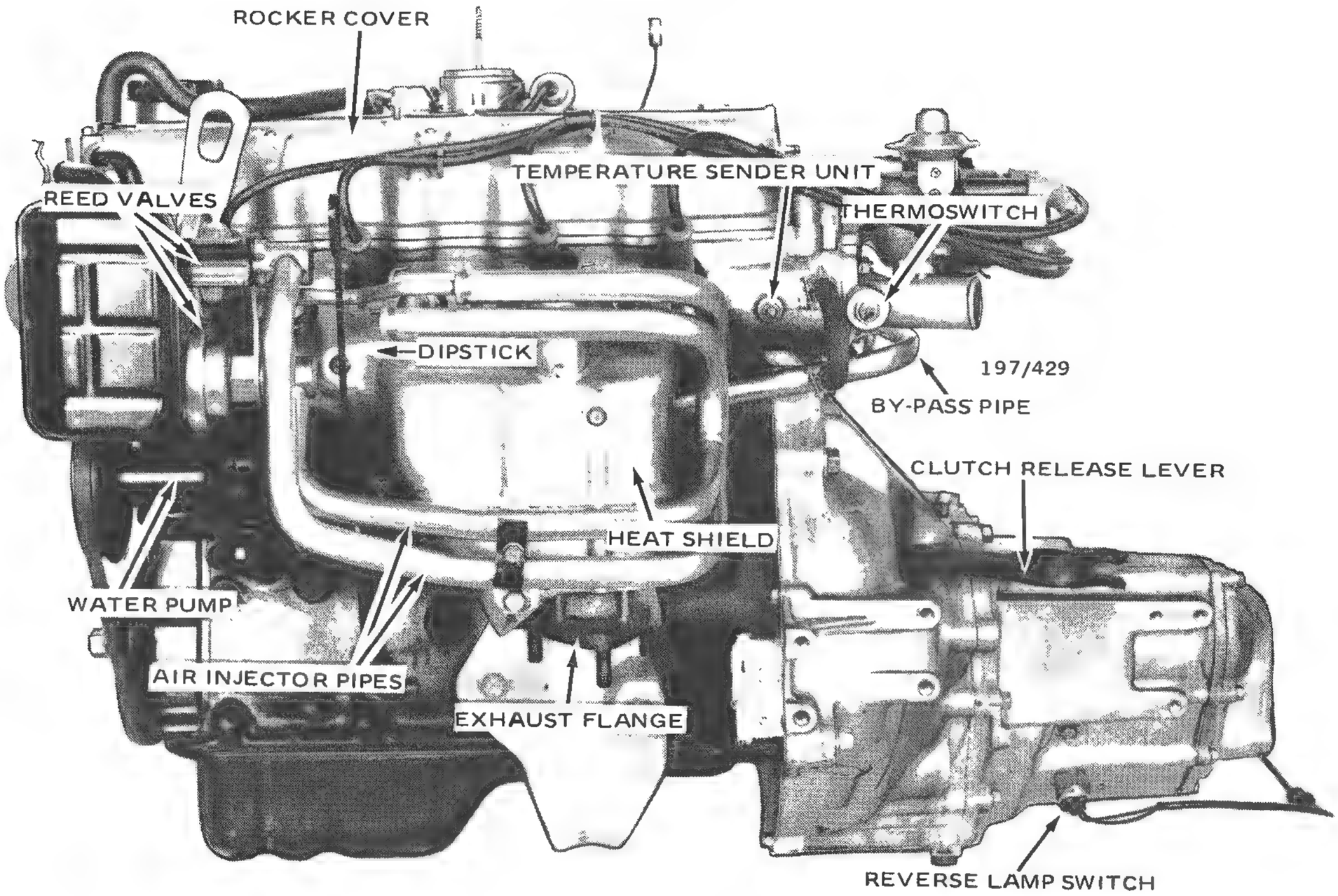

Front view of 1.5 litre engine and manual transmission assembly.

bolt. Remove the bolts retaining the mounting bracket to the transmission. Remove the mounting assembly from the vehicle.

(35) Check around the engine assembly to ensure that nothing will foul on the engine assembly and also that all relevant items have been disconnected or removed.

(36) Raise the engine upwards and manoeuvre the engine from the vehicle.

(37) Place the engine on a work bench or suitable engine stand. If necessary, remove the auxillary components from the engine referring to the relevant sections for the correct procedure.

Installation is a reversal of the removal procedure with attention to the following points:

(1) Ensure that the engine assembly is installed and bolted securely to all mountings before connecting up the various components to the engine and transmission and before removing the lifting tackle.

(2) Ensure that the engine mountings are not twisted or that they interfere with the vehicle body.

(3) Make sure the various drain plugs are secure.

(4) Fill the radiator with clean water and add corrosion inhibitor or antifreeze as necessary according to the manufacturers specifications.

(5) Fill the engine with the correct amount and grade of engine oil.

(6) Fill the transmission with the correct amount and grade of transmission oil.

(7) Start and run the engine until it reaches normal operating temperature at the same time check for oil and water leaks.

4. ROCKER ARMS AND SHAFTS ASSEMBLY

TO REMOVE AND DISMANTLE

NOTE: When ever the cylinder head bolts are removed, it is good policy to renew the cylinder head gasket.

(1) Raise the engine bonnet and fit fender covers to both front fenders.

(2) Disconnect the battery earth lead and drain the cooling system.

(3) Remove the air cleaner assembly from the vehicle. Refer to the Fuel System section for correct procedure.

(4) Remove the spark plug leads from the clips on the rocker cover and from the spark plugs.

(5) Disconnect the P.C.V. hose from the rocker cover. Disconnect the accelerator and choke cables from the carburettor and from the support bracket on the rocker cover.

(6) Remove the rocker cover retaining bolts and lift the rocker cover and gasket from the cylinder head. Discard the gasket.

NOTE: When lifting the rocker cover from the cylinder head, ensure that the half moon seal at the front of the cylinder head does not adhere to the rocker cover gasket and be allowed to drop down into the bottom of the timing cover.

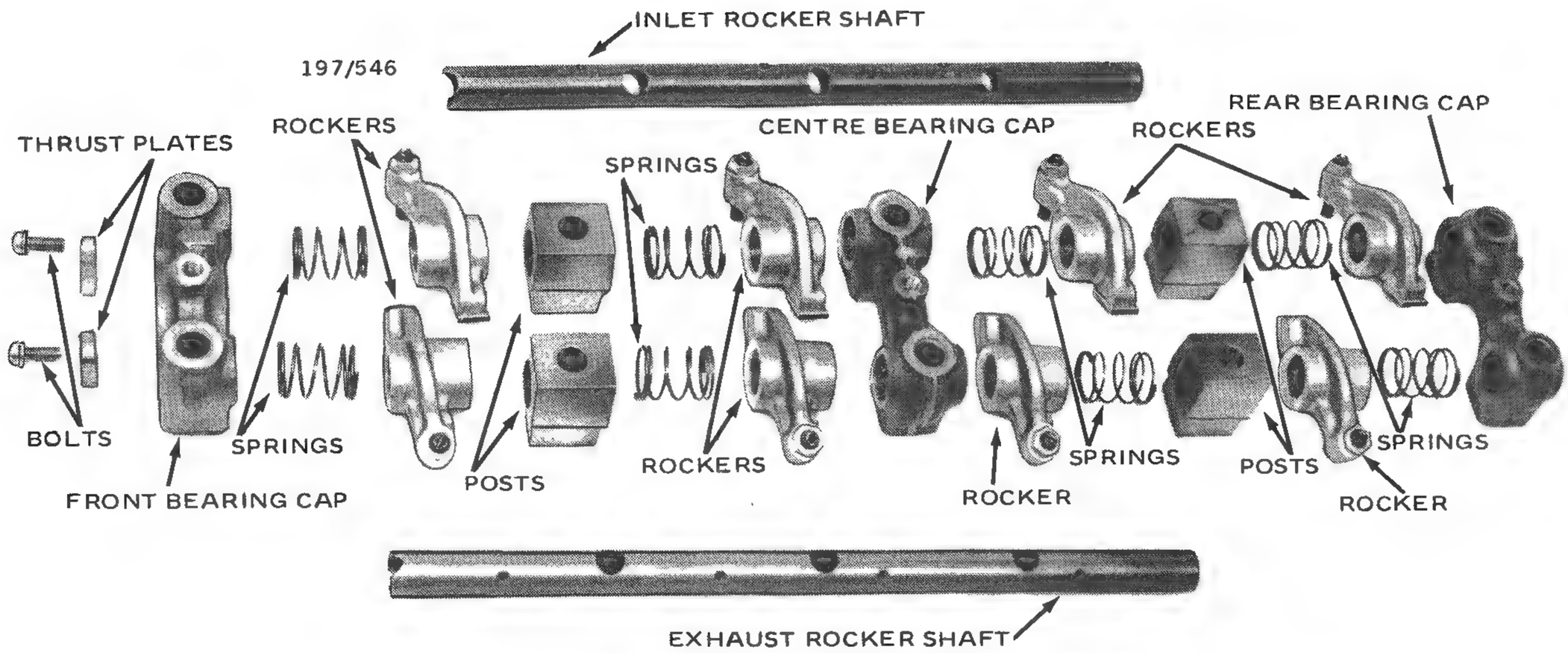

Dismantled view of rocker assembly.

(7) Before removing the rocker assembly, use spots of fast drying paint to mark the order and locations of the rocker arms, bearing caps and shaft support posts.

(8) First loosen and then remove the cylinder head bolts in the reverse order of the tightening sequence.

NOTE: Should there be any sign of the cylinder head gasket separating from the cylinder head or cylinder block, the cylinder head should be removed and a new gasket installed as described under the Cylinder Head heading.

(9) Lift the rocker assembly from the cylinder head.

NOTE: Do not turn the crankshaft.

(10) Dismantle the assembly by removing the front and rear bearing caps, the springs, the rockers and the support posts from the shafts. Remove the shafts from the centre bearing cap.

TO CLEAN AND INSPECT

(1) Wash all components in cleaning solvent and allow to dry.

(2) Visually inspect all components for wear and scoring, renew obviously damaged components.

(3) Instal the rockers to their correct positions on their rocker shafts and test for excessive wear by rocking the rocker arm from side to side. Renew rocker arms or shafts as necessary.

(4) Inspect the faces of the rocker arms, if badly worn renew the rocker arms. Light wear or scoring of the face can be corrected by honing on an oil stone.

TO ASSEMBLE AND INSTAL

Assembly and installation is a reversal of the removal and dismantling procedure with attention to the following points:

(1) Lubricate all components with clean engine oil before assembling.

(2) Instal the rocker shafts to the centre bearing cap.

(3) Instal the rocker arms, the springs and the shaft support posts in the correct order and to their original positions on the shafts. Ensure that the support posts are not upside down. Instal the front and rear bearing caps to complete the assembly.

(4) Instal the assembly to the cylinder head.

NOTE: Ensure that when the camshaft bearing caps are fitted to the cylinder head, the locating dowels are correctly seated. If this is not done, the locating dowels may become trapped between the camshaft bearing caps and the cylinder head and cause damage to the bearing caps.

(5) Instal and lightly tighten the cylinder head bolts.

(6) Tap the relevant rocker shaft support post

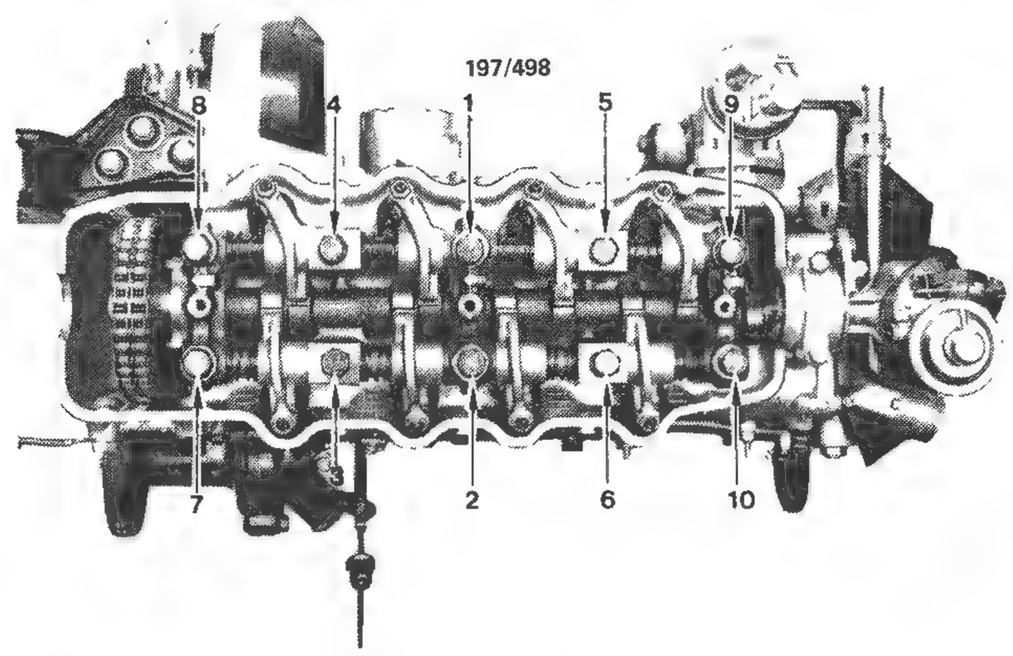

View of rocker arms and camshaft assembly layout with rocker cover removed. Also showing the cylinder head bolt tightening sequence.

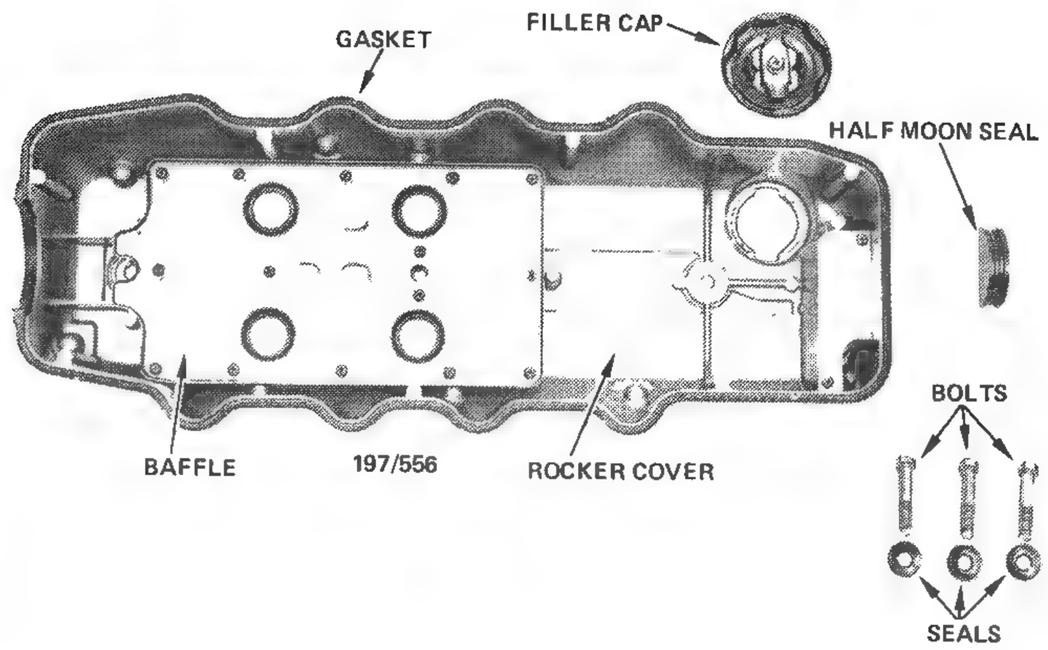

Inside view of the rocker cover and gasket.

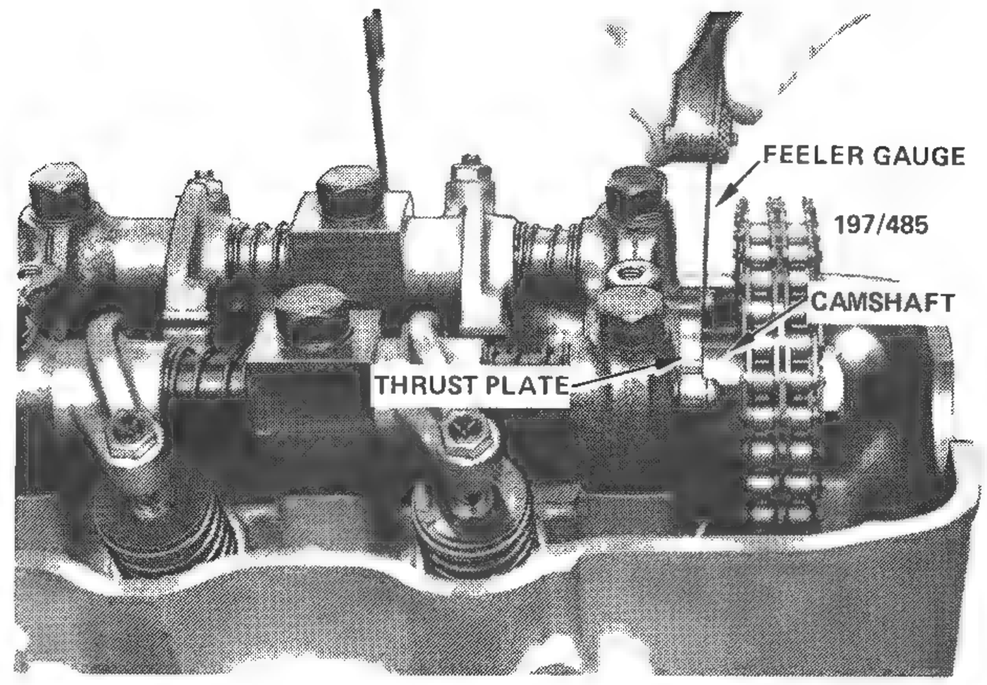

Checking camshaft end float using feeler gauges.

along until the centres of number one and number four cylinder exhaust rocker arms are offset by 1.0 mm from the centre of its valve stem. The exhaust rocker arms on number two and number three cylinders are manufactured offset and are not adjustable. This offset causes the exhaust valves to rotate while being operated and minimises seat wear.

(7) Tighten the cylinder head bolts to the specified torque in the correct sequence, ensuring that the offset is maintained on the rocker arms.

(8) Temporarily adjust the valve clearances as described in the Engine Tune-up section.

(9) Using a new gasket, instal the rocker cover to the engine and instal and tighten the rocker cover retaining bolts. Ensure that the half moon seal at the front of the engine is correctly located.

(10) Connect the accelerator and choke cables to the carburettor and the support bracket, and the PCV hose to the rocker cover.

(11) Connect the spark plug leads and the battery earth lead.

(12) Instal the air cleaner assembly and fill the cooling system.

(13) Start and run the engine until it reaches normal operating temperature, then retighten the cylinder head bolts and adjust the valve clearances.

5. CAMSHAFT

Special Equipment Required:
To Inspect – Vee blocks, dial gauge, micrometer

TO REMOVE

(1) Raise the engine bonnet and fit fender covers to both front fenders.

(2) Disconnect the battery earth lead and drain the cooling system.

(3) Remove the rocker cover as previously described under Rocker Arm and Shaft Assembly.

(4) Rotate the engine until the piston in No 1 cylinder is at tdc on the compression stroke. In this position the rotor arm in the distributor will be pointing to the No 1 spark plug segment in the distributor cap and the mark on the crankshaft pulley will be aligned with the 'T' mark on the timing cover graduation scale.

(5) Remove the distributor. Refer to the Electrical Section for correct procedure. Do not remove the distributor mounting clamp.

(6) Remove the half moon seal from the front of the cylinder head.

(7) Lever the camshaft forward as far as it will go. Using a feeler gauge, measure the clearance between the camshaft sprocket and the thrust plate on the front camshaft bearing cap. If this clearance exceeds 0.20 mm renew the thrust plate.

(8) Disconnect the fuel hoses from the fuel pump, remove the fuel pump retaining bolts and remove the fuel pump from the vehicle.

(9) Lock the camshaft sprocket by inserting a bar through one of the holes in the camshaft sprocket then loosen the camshaft sprocket retaining nut.

NOTE: When loosening the camshaft sprocket retaining nut ensure that the camshaft sprocket is held stationary.

(10) Disconnect the wiring from the rear of the alternator. Remove the alternator drive belt adjusting

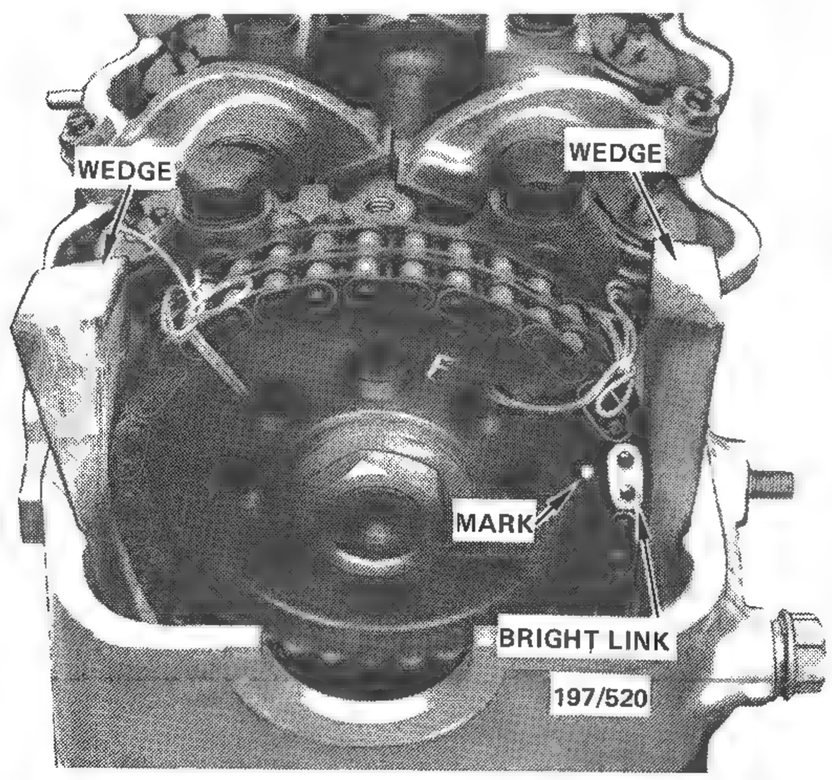

View of camshaft sprocket in timed position. Wooden wedges are used to stop camshaft sprocket falling down after camshaft removal.

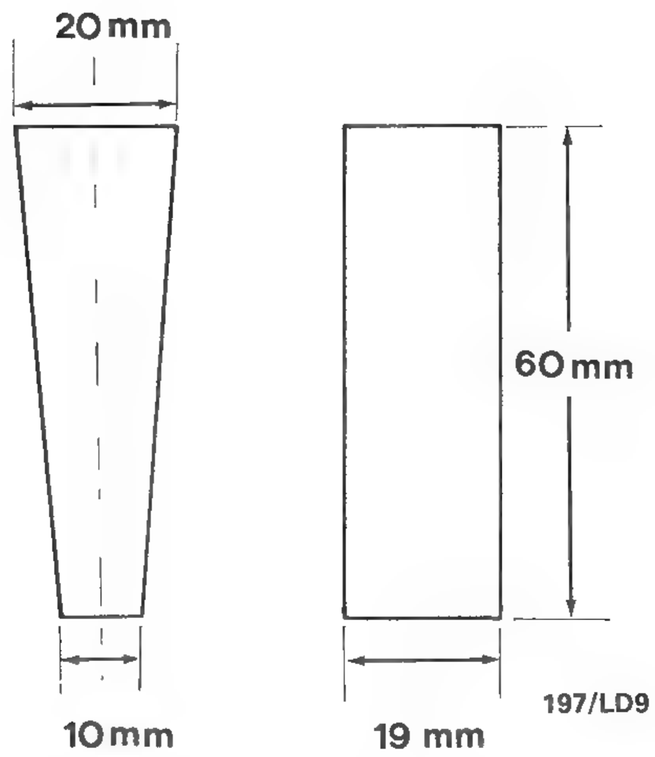

Timing chain and sprocket support tool which can be made from a suitable block of wood to the dimensions shown.

bolt, the alternator drive belt and the alternator mounting bolt. Remove the alternator from the vehicle.

(11) Remove the timing chain tensioner retaining bolts and carefully withdraw the timing chain tensioner from the timing cover.

(12) Tie the camshaft sprocket and the timing chain together with a piece of string or tie-wire to prevent separation from each other.

(13) Remove the rocker arms and shafts as previously described.

(14) Remove the camshaft sprocket retaining nut and washer.

(15) Instal two wooden wedges, which can be fabricated from a block of wood to the dimensions given in the illustration, in between the timing chain and the cylinder head to retain the camshaft sprocket and the timing chain in position.

NOTE: Failure to keep the timing chain and sprocket in position will result in the timing chain becoming disengaged from the crankshaft sprocket and the correct valve timing will be lost. It will be necessary then to remove the engine sump and timing cover to readjust the valve timing at the crankshaft sprocket.

(16) Withdraw the camshaft from the camshaft sprocket in a rearward direction and remove the camshaft from the vehicle.

TO INSPECT

(1) Wash the camshaft in cleaning solvent and allow to dry.

(2) Inspect the camshaft lobes for wear, pitting or loss of hard facing. Measure the journal diameters and refer to Specifications to check for wear. Renew the camshaft if necessary.

(3) Mount the camshaft in Vee blocks and, using a dial gauge, check the camshaft for run out. Straighten or

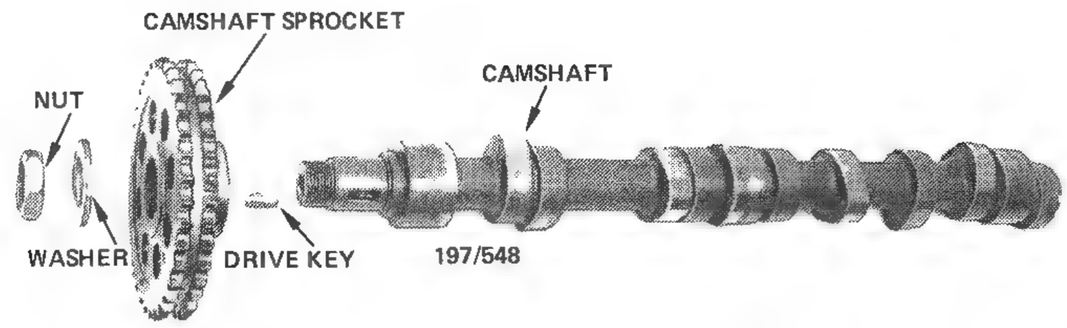

View of camshaft and components.

renew the camshaft if the run out is beyond the specified limit.

(4) Place the camshaft in the bearings on the cylinder head and lay a piece of Plastigage across each journal. Fit the camshaft bearing caps, instal the retaining bolts and tighten them to the specified torque.

(5) Remove the retaining bolts and camshaft bearing caps. Measure the spread width of the Plastigage with the packet scale to determine each bearing oil clearance.

(6) If the camshaft bearing oil clearance is above the specified limits, check the clearance using a new camshaft. If the clearance is still not within the specified limits renew the cylinder head and camshaft.

TO INSTAL

Installation is a reversal of the removal procedure with attention to the following points:

(1) Lubricate the camshaft journals and the bearings with clean engine oil.

(2) Instal the camshaft to the head, into the camshaft sprocket and instal the washer and retaining nut.

(3) Instal the rocker arms and shafts as previously described, ensuring that the engine is still set at tdc on No 1 cylinder.

(4) Prior to installing the timing chain tensioner, unlock the sleeve on the timing chain tensioner by using a suitable tool and pushing the top of the ratchet inwards and disengaging it from the sleeve. Push the sleeve fully inwards and connect the stop lever with the pin on the sleeve. Release the ratchet and instal the chain tensioner. If necessary, refer to the Timing Cover, Chain and Sprockets heading.

NOTE: As soon as the crankshaft has made one or two turns, the stop lever will disconnect itself from the pin and is adjusted automatically.

(5) Tighten the camshaft sprocket retaining nut and ensure the half moon seal is correctly fitted to the cylinder head.

(6) Check and if necessary adjust the valve clearance and ignition timing as described in the Engine Tune-up section.

6. MANIFOLDS

INLET MANIFOLD

To Remove and Instal

(1) Raise the engine bonnet and fit fender covers to both front fenders.

(2) Disconnect the battery earth lead.

(3) Remove the air cleaner assembly and disconnect the choke and accelerator cables from the carburettor. Refer, if necessary, to the Fuel System section for correct procedure.

(4) Disconnect the fuel supply hose from the carburettor and plug the hose to prevent spillage.

(5) Disconnect the PCV hose from the manifold and position away from the working area.

(6) Drain the cooling system and remove the coolant hoses from the inlet manifold.

(7) Mark and disconnect the vacuum and emission control hoses from their connections on the carburettor and inlet manifold.

(8) Disconnect the vacuum supply hose to the brake servo unit from the inlet manifold.

(9) Disconnect the hoses from the anti-afterburn valve, unclip and remove the anti-afterburn valve.

(10) Disconnect the idle cut solenoid wire at the connector.

(11) Disconnect the temperature sender unit wire from the sender unit and the wire from the thermoswitch and disengage the wiring loom from its retaining clips and place away from the working area.

(12) On models with automatic transmission, unscrew the tube nuts retaining the EGR valve supply pipe to the EGR valve and exhaust manifold. Remove the pipe from the engine and place away from the working area.

(13) Remove the bolts and nuts retaining the inlet manifold to the cylinder head. Remove the anti-afterburn valve retaining bracket and slide the inlet manifold off the manifold studs.

Installation is a reversal of the removal procedure with attention to the following points:

(1) Ensure all carbon and old gasket material is cleaned from the manifold and cylinder head faces.

(2) Check the mating face of the manifold for excessive distortion with a straight edge and feeler gauge.

(3) Use a new gasket and ensure that all mounting bolts and nuts are tightened to the specified torque.

(4) Ensure that the emission and vacuum supply hoses are connected correctly.

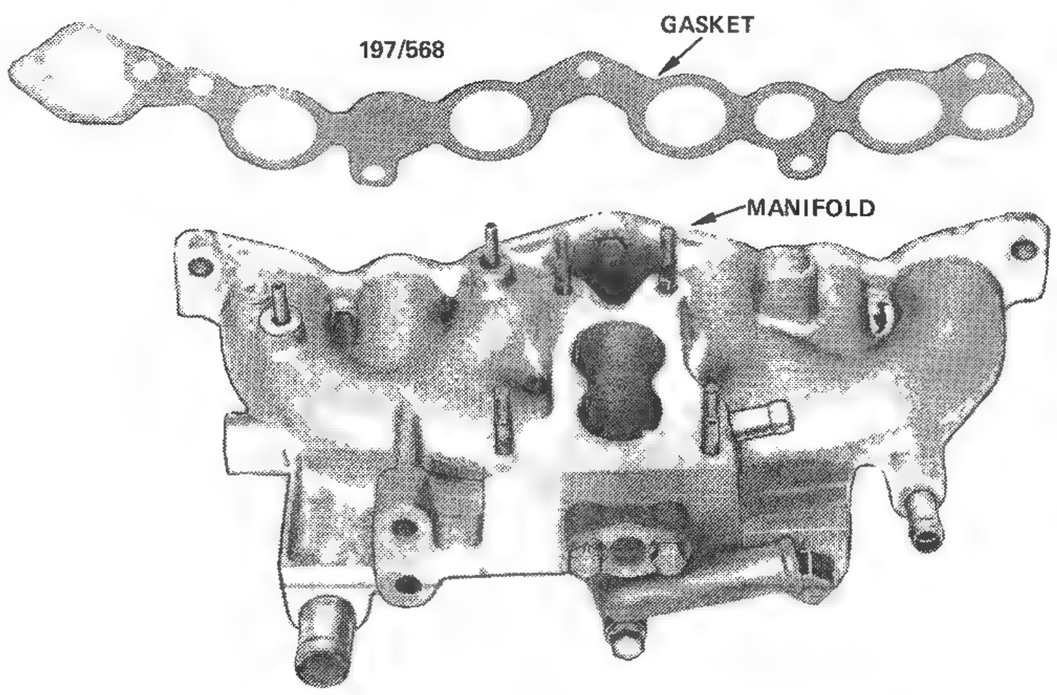

View of inlet manifold removed from the engine. Manual transmission model.

(5) Refill the cooling system, add corrosion inhibitor and run the engine to check for leaks.

EXHAUST MANIFOLD

To Remove and Instal

(1) Open the engine bonnet and fit fender covers to both front fenders.

(2) Remove the air cleaner assembly as described in the Fuel System section.

(3) On automatic transmission models, unscrew the tube nuts retaining the EGR valve supply pipe to the exhaust manifold and EGR valve. Remove the supply pipe from the engine.

(4) On manual transmission models, unscrew the air injection nozzle tubes from the exhaust manifold. Remove the bolts retaining the reed valve bracket to the cylinder head. Remove the bolt retaining the nozzle tube bracket to the exhaust manifold. Remove the bolts retaining the hot air stove to the exhaust manifold. Remove the hot air stove.

(5) Remove the nuts retaining the exhaust pipe to the manifold flange and remove the bolts retaining the exhaust pipe support bracket to the cylinder block and the exhaust manifold flange. Separate the exhaust pipe from the exhaust manifold.

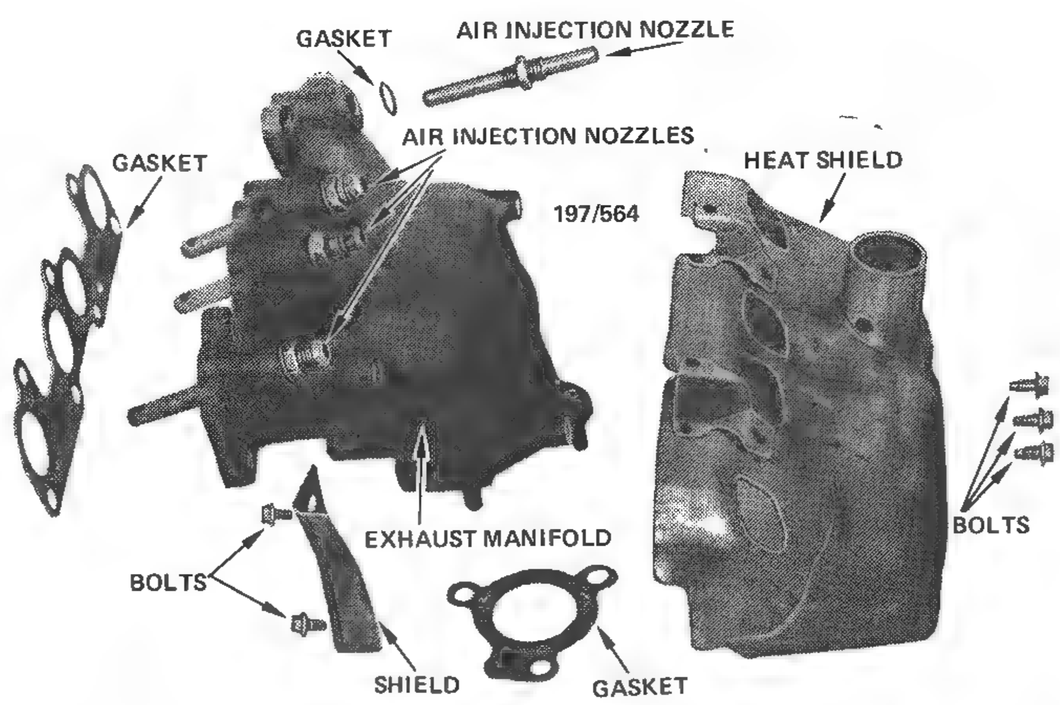

Dismantled view of exhaust manifold and associated components. Manual transmission model.

(6) Remove the exhaust manifold retaining bolts and nuts and remove the exhaust manifold and gasket from the engine.

Installation is a reversal of the removal procedure with attention to the following points:

(1) On manual transmission models, withdraw the air injection nozzles and ensure the holes in the air injection nozzles are free from carbon.

(2) Check the mating face of the manifold for excessive distortion with a straight edge and feeler gauge.

(3) Ensure that all carbon and old gasket material is cleaned from the manifold and cylinder head faces.

(4) Tighten the mounting bolts and nuts to the specified torque.

7. CYLINDER HEAD

Special Equipment Required:
To Dismantle and Assemble – Valve spring compressor
To Inspect – Dial gauge, straight edge
To Measure – Micrometer

TO REMOVE

(1) Open the engine bonnet and fit fender covers to both front fenders.

(2) Disconnect the battery earth lead.

(3) Drain the cooling system and the engine oil.

(4) Remove the rocker cover, the rocker arms and shafts assembly and the camshaft as previously described. When removing the camshaft, the sprocket and chain must be supported with string or wire from an overhead fixture, instead of using wooden wedges.

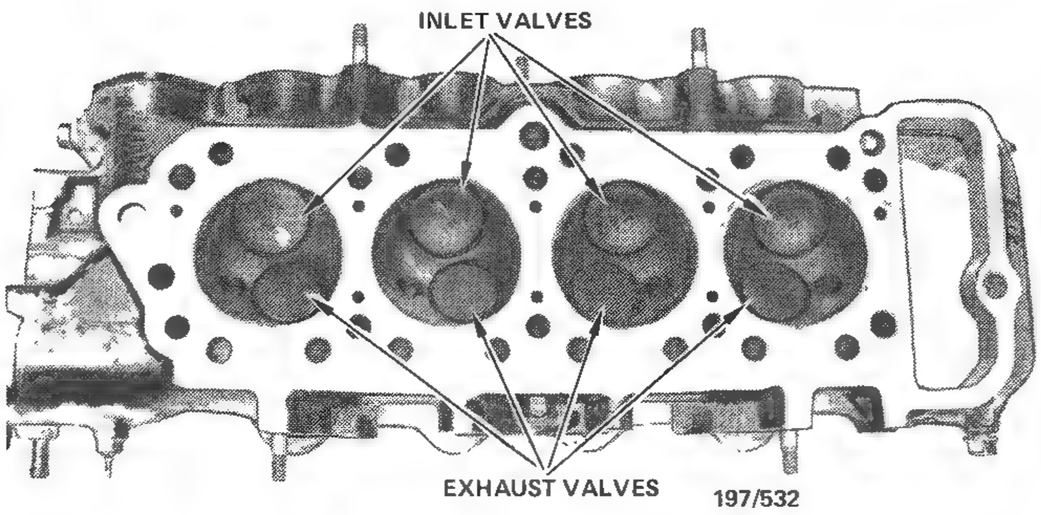

Cylinder head showing valve arrangement.

(5) Remove the inlet and exhaust manifolds as previously described.

(6) Remove the bolt from the front of the cylinder head retaining the cylinder head to the timing cover.

(7) Remove the top radiator hose and the by-pass hose from the cylinder head.

(8) Disconnect the by-pass pipe from the water-pump and remove the by-pass pipe from the vehicle.

(9) Remove the cylinder head from the cylinder block.

NOTE: If difficulty is experienced in separating the cylinder head from the cylinder block, place a block of wood against the cylinder head manifold flange and sharply tap the block of wood upwards. Never wedge a screwdriver or similar tool between the cylinder head and the cylinder block in order to dislodge the cylinder head.

When removing or installing the cylinder head take care not to lose tension on the timing chain and camshaft sprocket.

TO DISMANTLE

(1) Use a suitable valve spring compressor tool to compress the valve spring.

(2) Remove the two collets from the valve spring retainer.

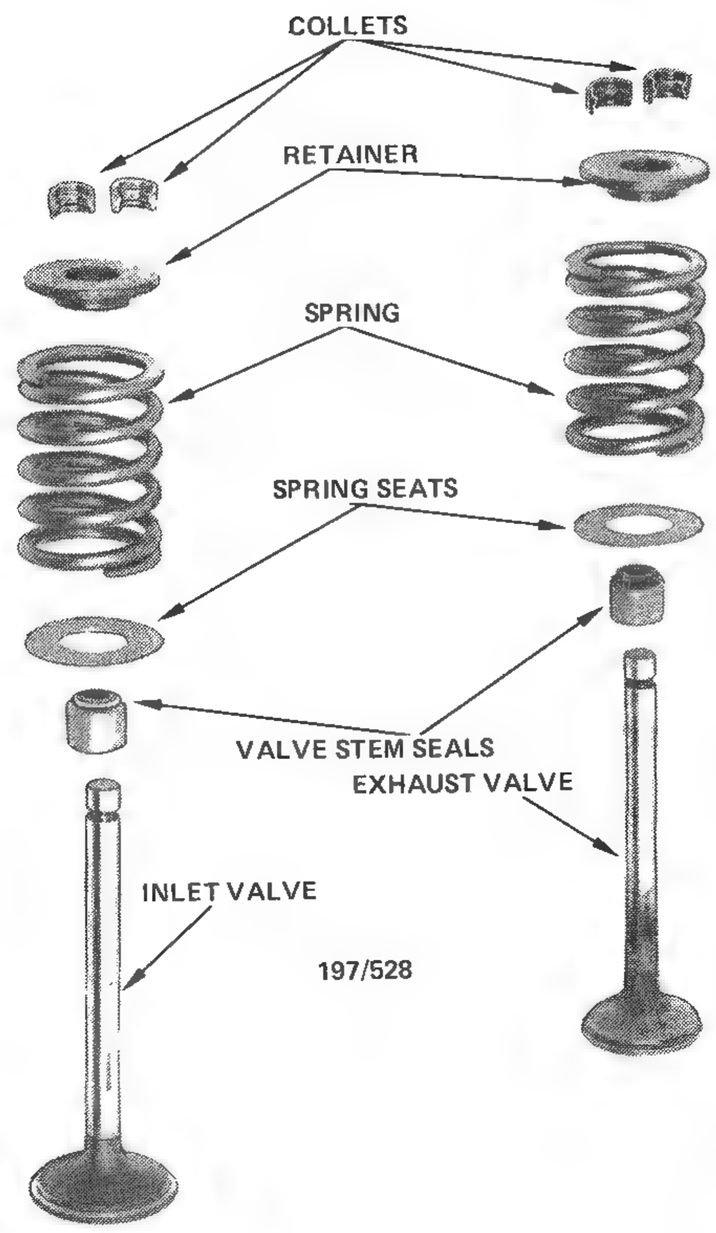

Dismantled view of valve and spring components.

NOTE: Should difficulty be experienced in separating the valve spring retainer from the collets, apply light pressure to the spring compressor then sharply tap the edge of the valve spring retainer with the end of a hammer handle.

(3) Release the spring compressor and remove the valve spring and retainer.

(4) Remove the valve stem seal and the valve spring seat.

(5) Using a warding file, remove any burrs from the valve stem to ensure that the valve guide is not damaged as the valve is withdrawn.

(6) Remove the valve and place it with the other components of the valve assembly in a suitable rack or tray to ensure that they are installed to their original position during assembly.

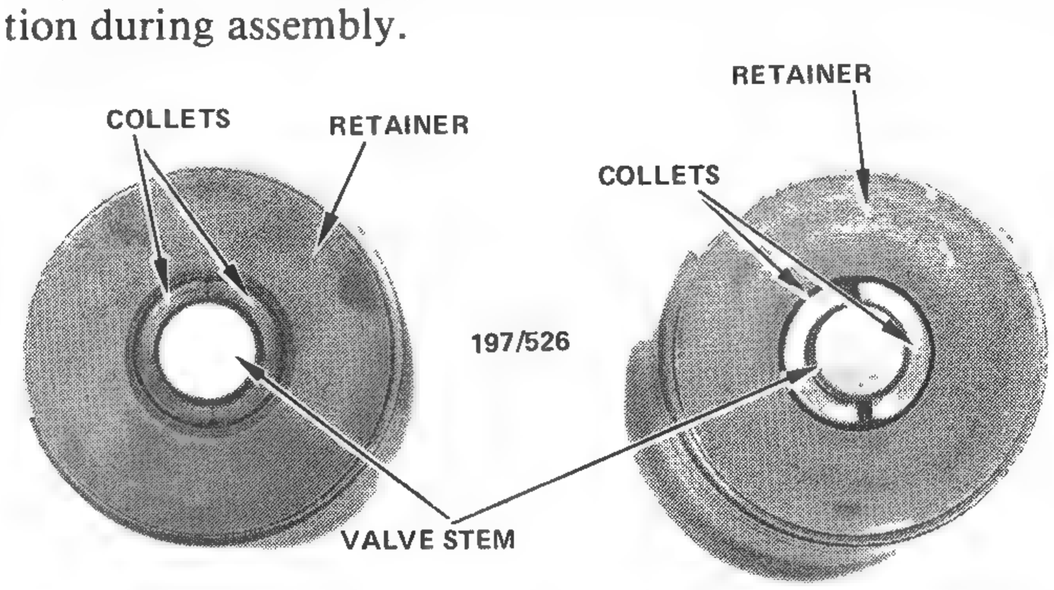

Installed view of valve collets. Exhaust valve collets are dark, inlet valve collets are bright.

Repeat the removal procedure with the remainder of the valves.

NOTE: To assist the exhaust valves to rotate during engine operation, the exhaust valve collets form a perfect circle when installed to the collet retainer. The inlet valve collets and the exhaust valve collets are not interchangeable. To distinguish the two types, the inlet valves collets are bright, whilst the exhaust valve collets are dark.

TO CLEAN AND INSPECT

(1) Clean the valves thoroughly of carbon deposits and discard any valve that is cracked or burnt.

(2) Reface each valve head to the specified angle, refer to Specifications and reface each valve stem flat and true on a suitable valve refacing tool.

If a valve head thickness has been reduced to less than 1.0 mm after the refacing operation, then the valve concerned should be renewed.

(3) Measure the valve stem to guide clearance with a dial gauge. This is done by 'rocking' the valve back and forth in the valve guide and noting the greatest reading on the dial gauge.

If the clearance is outside Specifications then the valve guides will have to be renewed and new valves fitted. This is best left to an engine reconditioning shop.

(4) Remove the carbon deposits from the combustion chambers, the cylinder head face and the valve throats. Check the condition of the valve seats and, if necessary, recut the valve seats with a valve cutter of the recommended angle and width.

NOTE: If the valve seats in the cylinder head are worn, cracked or recessed excessively then new inserts will have to be installed. This is best left an engine reconditioning shop who has the necessary specialised equipment.

(5) With a steel straight edge and feeler gauge, check along and across the cylinder head for warping. If the cylinder head is found to be warped in excess of Specifications it will be necessary to have its surface ground to return it to a serviceable condition.

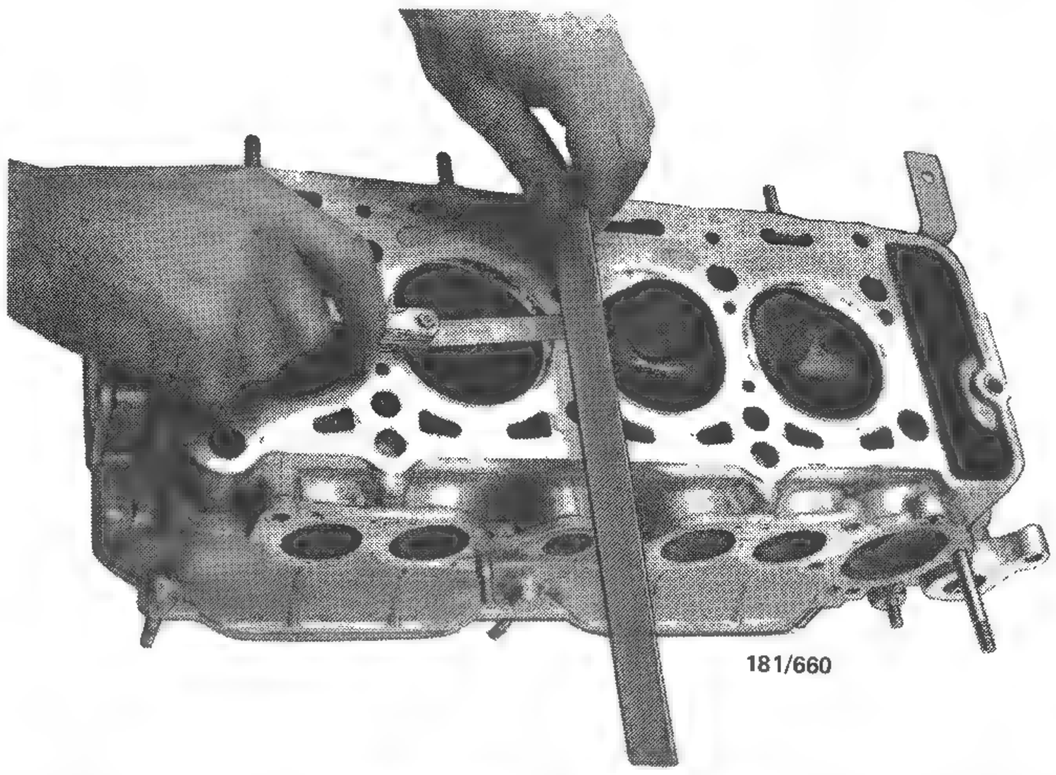

Checking cylinder head face for warpage using straight edge and feeler gauge. Typical.

(6) Check the cylinder head face and the combusion chambers for cracks and burn marks. Inspect the water transfer holes in the cylinder head for corrosion.

(7) Check the valve springs free length and squareness by comparison with a new spring. Renew springs that are suspect or prove to be unserviceable.

(8) Lap the valves to the valve seats with a lapping compound. Apply a smear of 'Prussian Blue' to the valves after lapping and check the valves on their respective seats to ensure that a true and concentric seating has been obtained.

(9) Ensure that all traces of valve lapping compound have been washed from the valves and the combustion chambers.

(10) Ensure that all traces of old gasket is removed from the cylinder head face and the manifold faces.

TO ASSEMBLE

Assembly is a reversal of the dismantling procedure with attention to the following points:

(1) Lubricate all component wear surfaces with clean engine oil before assembly to ensure adequate lubrication when starting.

(2) Instal the spring seats over the valve guides before installing the valve stem seals onto the valve guides.

(3) Using a suitable tubular drift, carefully tap the valve stem seals onto the valve guides. Ensure that the seals are squarely on the valve guides and are pushed fully down.

(4) Use care when installing the valves to prevent damage to the seals.

(5) Ensure that the valve retaining collets are installed to their correct positions, as noted during the dismantling procedure and that they are fully seated in the valve stem groove before releasing the valve spring compressor.

TO INSTAL

Installation is a reversal of the removal procedure with attention to the following points:

(1) Ensure that the mating faces of the cylinder block and the cylinder head are perfectly clean.

(2) Do not use any gasket compound when installing the cylinder head gasket.

(3) Instal the cylinder head gasket and cylinder head to the cylinder block.

(4) Instal the camshaft and the rocker assembly as described under the appropriate headings.

(5) Instal and securely tighten the cylinder head to timing cover bolt.

(6) Instal the inlet and exhaust manifold as described under the appropriate heading.

(7) After completing the installation, fill the cooling system as described in the Cooling System section.

(8) Start and run the engine, check for coolant and oil leaks.

(9) With the engine at operating temperature, retighten the cylinder head bolts and check and adjust the valve clearances and ignition timing as described in the Tune-up section.

8. ENGINE SUMP

TO REMOVE

(1) Open the engine bonnet and fit fender covers to both front fenders.

(2) Disconnect the battery earth lead.

(3) Raise the front of the vehicle and support on chassis stands.

(4) Remove the bolts retaining the splash guards to the crossmember and the body. Remove the splash guards from the vehicle.

(5) Drain the oil from the engine sump into a suitable container, instal and tighten the sump drain plug and remove the dipstick from the engine.

(6) Remove the sump retaining bolts and washers and remove the sump from the engine. Should the sump adhere to the engine loosen it with a firm bump with the palm of the hand.

TO INSTAL

Installation is a reversal of the removal procedure with attention to the following points:

(1) Where a sump gasket was fitted, remove any old gasket pieces from the sump and the engine.

(2) Clean the engine and the sump, removing carbon and sludge deposits. Wipe the sump with a lint free cloth. Ensure that the sump retaining bolt holes are clear.

(3) Check the sump for damage, cracks or deformation.

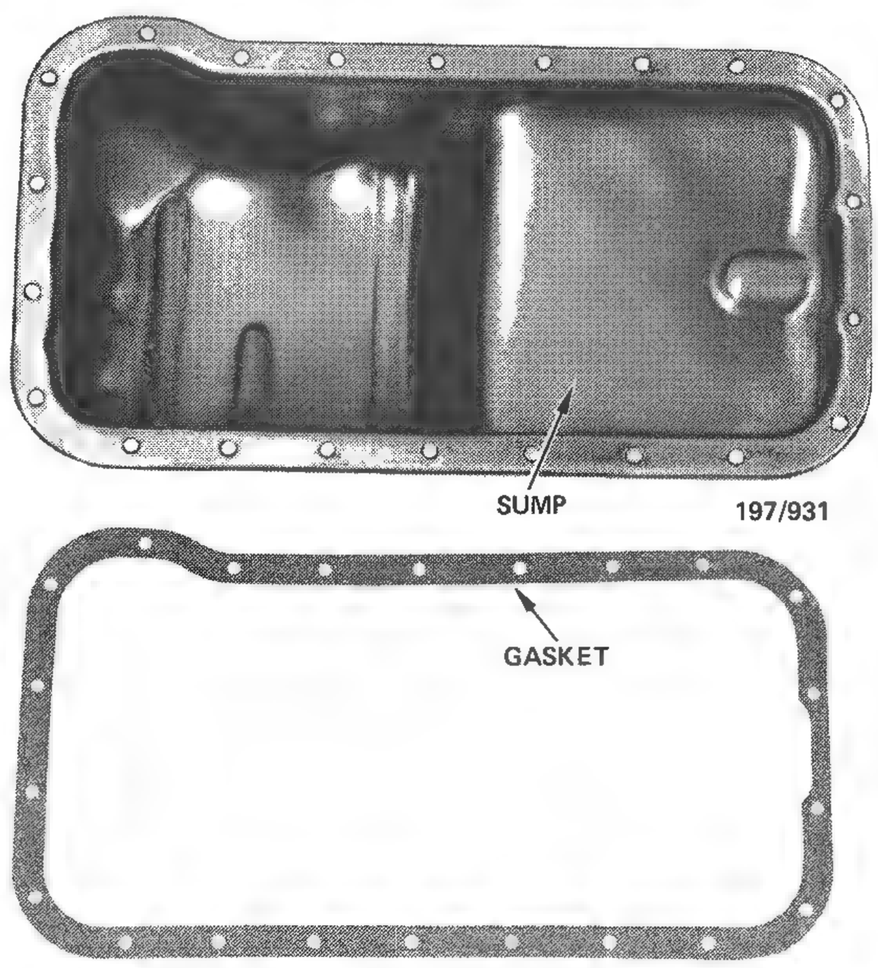

View of engine sump and gasket.

(4) Using an approved liquid sealing compound apply the compound to the engine sump and engine. If a new sump gasket is to be installed, place the gasket on the engine sump.

(5) Instal the engine sump and gasket to the engine and instal the retaining bolts. Tighten the retaining bolts to the specified torque. Instal the splash guards.

(6) Ensure the sump drain plug is secure and lower the vehicle to the ground.

(7) Refill the engine with the specified amount and grade of engine oil.

(8) Start and run the engine and check for oil leaks.

9. OIL PUMP

Special Equipment Required:

To Remove and Instal Drive Sprocket – Press and press plates

TO REMOVE AND DISMANTLE

(1) Open the engine bonnet and fit fender covers to both front fenders.

(2) Disconnect the battery earth lead.

(3) Raise the front of the vehicle and support on chassis stands.

(4) Remove the bolts retaining the splash guards to the crossmember and the body. Remove the splash guards from the vehicle.

(5) Drain the engine oil and remove the engine sump as previously described.

(6) Remove the bolts retaining the oil pump to the crankcase.

(7) Manoeuvre the oil pump drive sprocket from the oil pump drive chain and remove the oil pump from the engine.

(8) Using a suitable press and press plates, support the oil pump drive sprocket on the press plates and, using a suitable drift, press the oil pump from the drive sprocket.

(9) Remove the bolts retaining the pump cover to the pump body and separate the two components.

(10) Note the marks on the inner and outer rotors and remove the rotors from the pump body.

(11) Remove the pressure relief valve by removing the split pin from the pump cover and withdrawing the spring seat, the spring and the plunger.

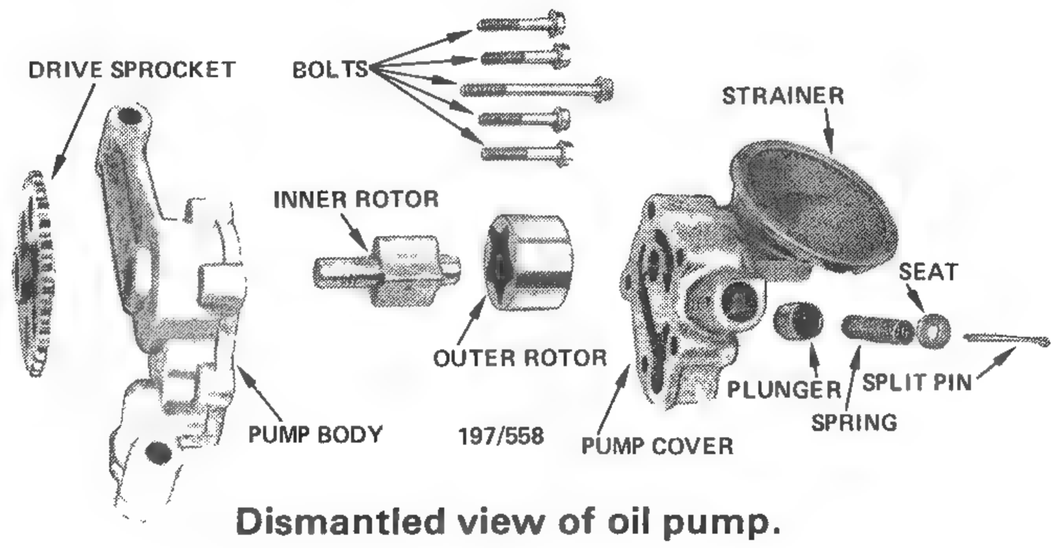

Dismantled view of oil pump.

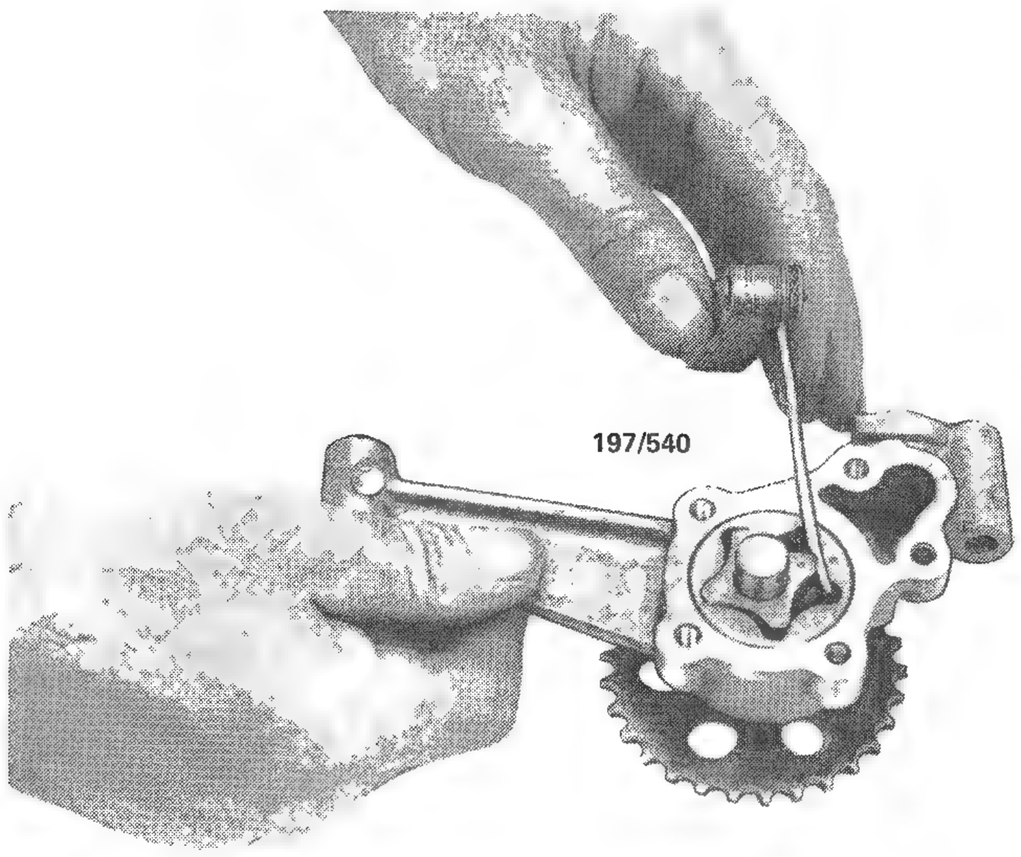

Checking clearance between inner and outer rotor tips.

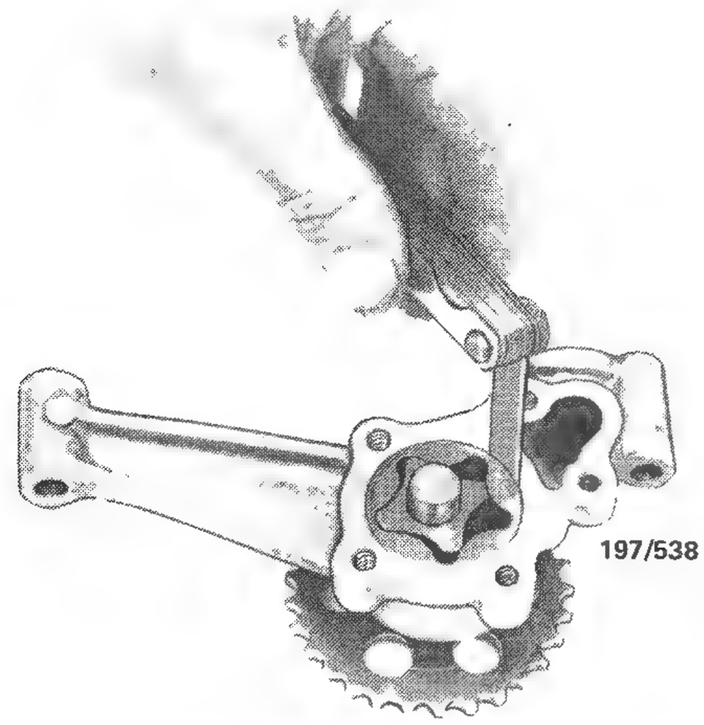

Checking clearance between outer rotor and pump body.

TO CLEAN AND INSPECT

(1) Clean all parts in solvent and blow dry.

(2) Check the clearance between the tips of the inner and outer rotor and the clearance between the pump main body and outer rotor. If clearance at these points exceeds Specifications the oil pump should be renewed.

(3) Check the rotor end float, place a straight edge across the face of the main body and measure the distance between the straight edge and rotor with a feeler gauge. Then place the straight edge across the pump cover and measure the clearance with a feeler gauge. If the combined clearance exceeds Specifications, renew the oil pump.

(4) Inspect the rotors and pump main body for scoring or wear. Renew the oil pump if these faults are evident.

(5) Check the relief valve plunger for wear or damage and the free length of the relief valve spring. Renew as necessary any faulty component.

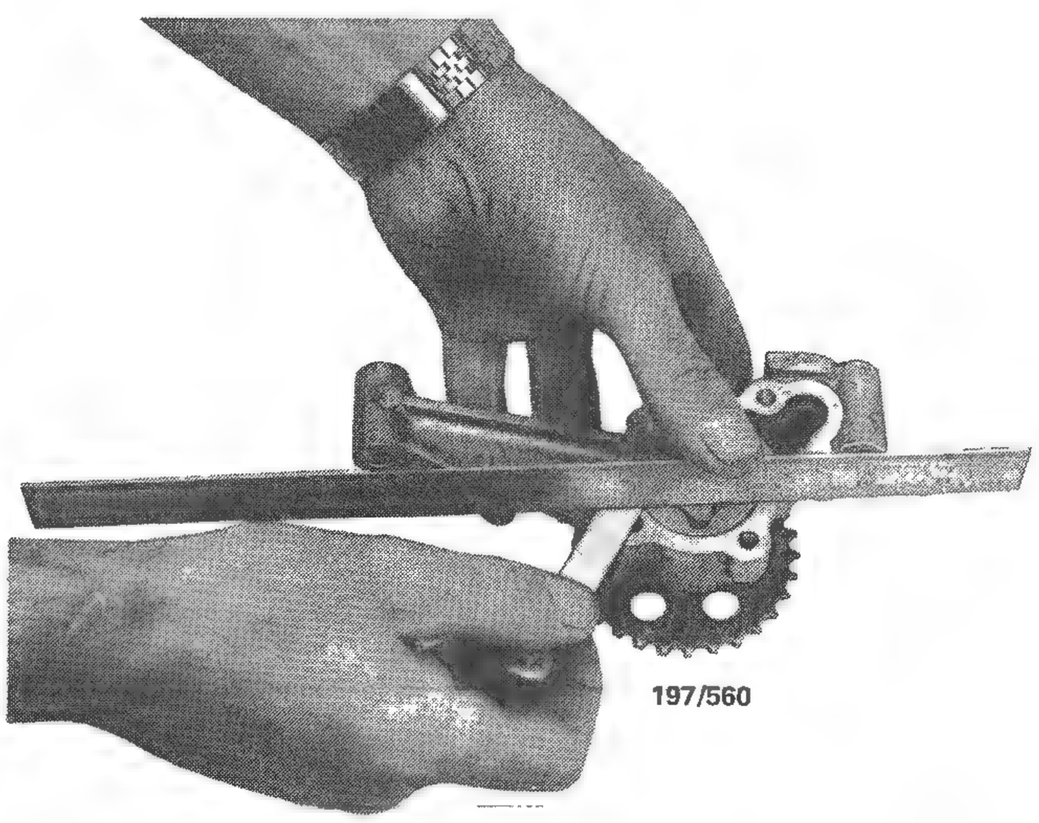

Checking clearance between rotors and pump body end face.

(6) Check the oil strainer for damage or blockage, renew or clean the strainer as necessary.

TO ASSEMBLE AND INSTAL

Assembly and installation is a reversal of the removal and dismantling procedure with attention to the following points:

(1) Liberally lubricate all components with clean engine oil before assembly.

(2) Instal the relief valve assembly into the pump cover, using a new split pin to retain the assembly.

(3) Align the mating marks on the rotors and instal them into the pump body with the mating marks facing towards the pump cover.

(4) Instal the pump cover and instal and tighten the pump cover to the pump body retaining bolts to the specified torque.

(5) Mount and support the oil pump in a press and press the drive sprocket onto the oil pump rotor shaft until the end of the drive sprocket is flush with the rotor shaft.

(6) Instal the oil pump to the engine and instal and tighten the pump retaining bolts securely.

(7) Instal the sump to the engine as previously described and fill the engine sump with the correct grade and quantity of oil.

(8) Start the engine and check for oil leaks.

10. TIMING COVER, CHAIN AND SPROCKETS

TO REMOVE

(1) Remove the engine assembly from the vehicle and place it on an engine stand or work bench as previously described.

(2) Loosen the alternator mounting bolts and remove the alternator adjusting bracket and drive belt.

(3) Remove the alternator from its mounting

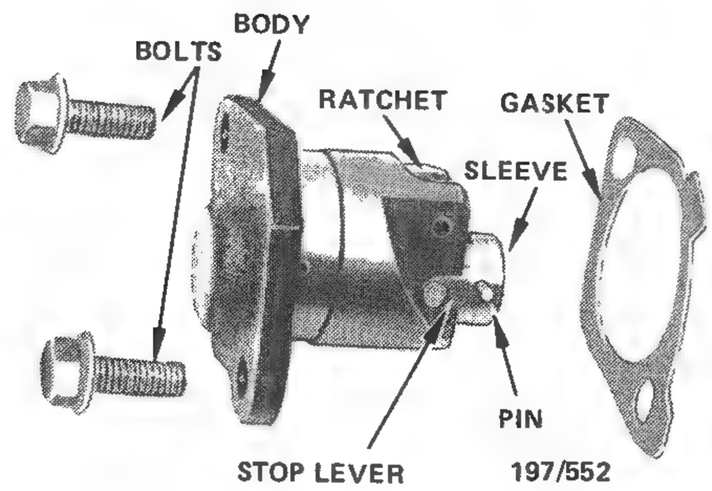

View of timing chain tensioner and components.

bracket and remove the mounting bracket from the engine.

(4) Remove the water pump to engine retaining bolts and disconnect the by-pass pipe hose from the water pump. Remove the water pump and gasket and discard the gasket.

(5) Remove the rocker cover from the engine.

(6) Remove the crankshaft pulley retaining bolt and withdraw the pulley off the crankshaft.

(7) If not previously drained, remove the engine sump drain plug and drain the oil into a suitable container. Instal and tighten the drain plug.

(8) Remove the sump retaining bolts and remove the sump.

(9) Remove the bolt securing the cylinder head to the front of the timing cover.

(10) Remove the timing chain tensioner from the timing cover.

(11) Remove the bolts attaching the timing cover to the engine assembly.

(12) Carefully separate and withdraw the timing

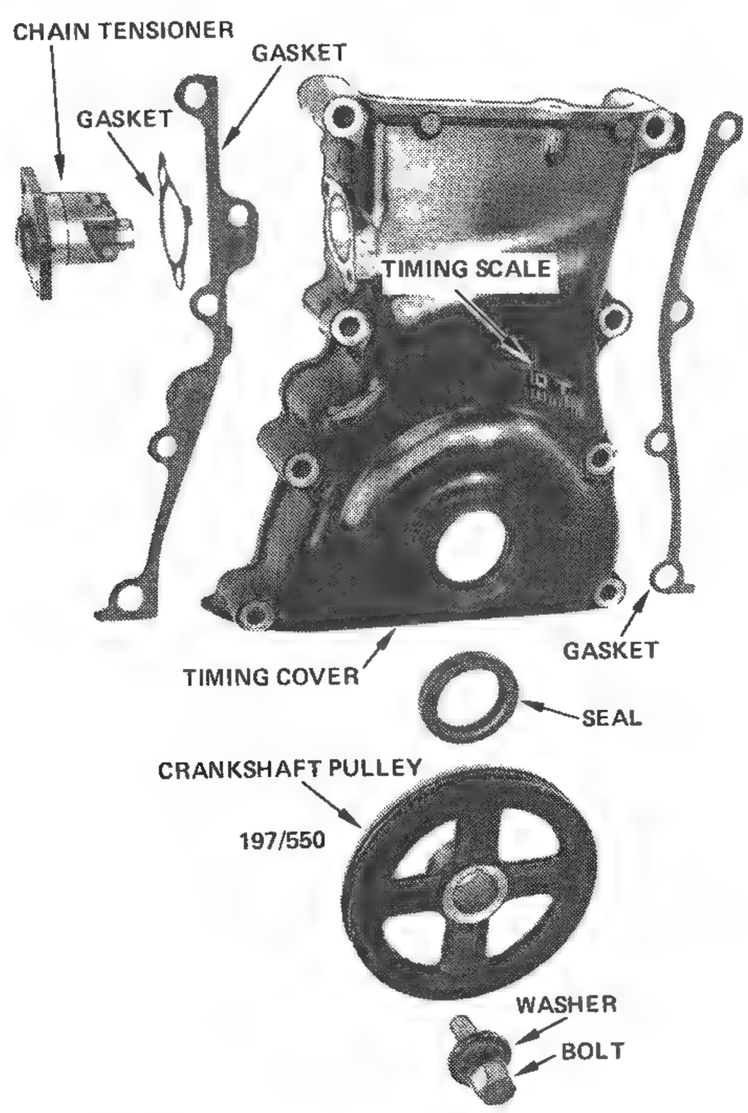

View of timing cover and components.

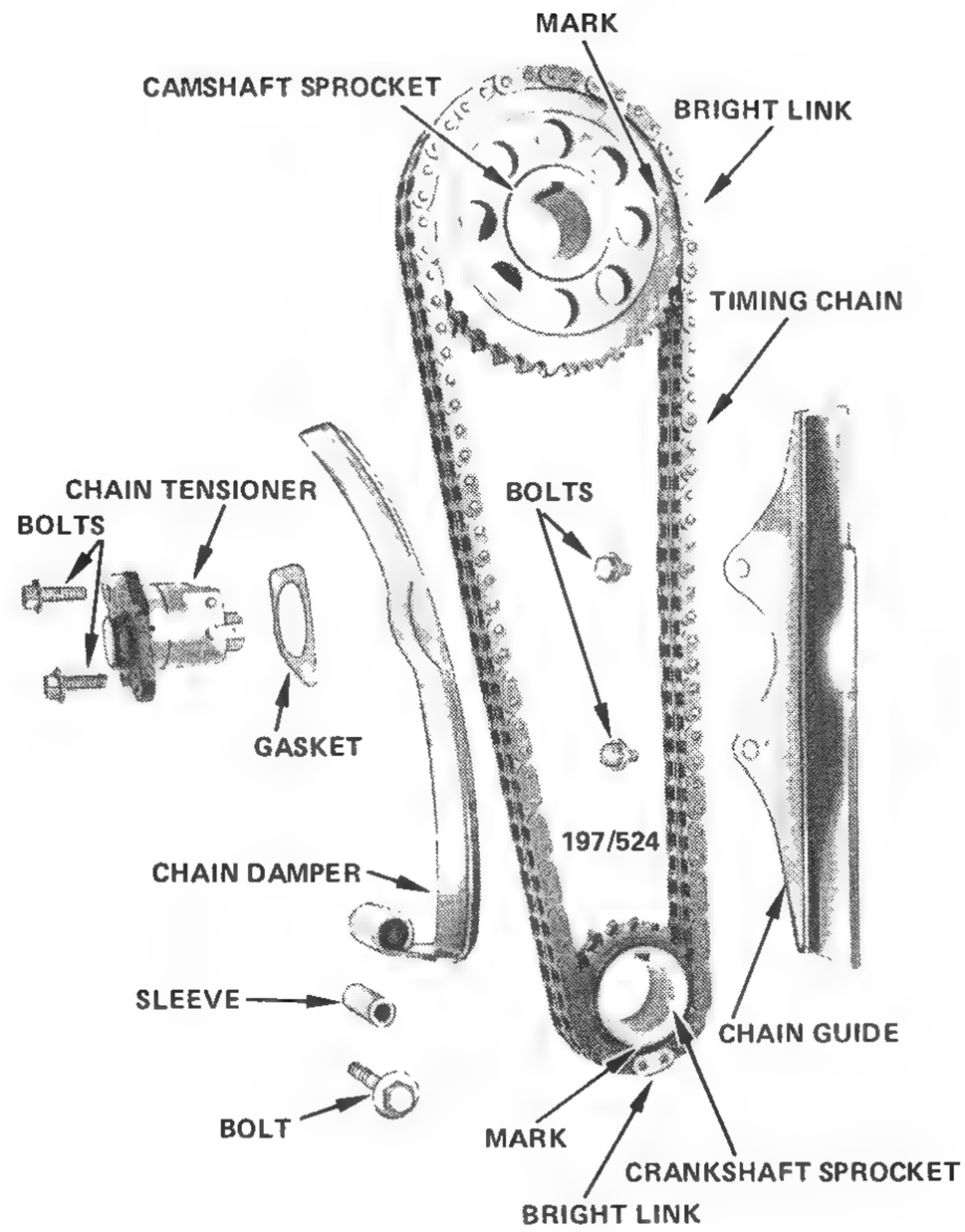

View of timing chain sprockets, and components. Note the location of the bright chain links in relation to the camshaft and crankshaft sprockets.

cover from the locating dowels on the cylinder block.

NOTE: Care must be taken to ensure that the cylinder head to timing cover gasket is not broken when removing the cover. If necessary run a fine feeler strip between the gasket and timing cover to prevent the gasket from adhering and breaking.

(13) Rotate the crankshaft until the keyways in the crankshaft and camshaft sprockets are vertical. Take note of the fitted position of the bright links on the timing chain.

(14) Remove the rocker arms and the camshaft as described under the relevant headings.

NOTE: Should there be any sign of the cylinder head gasket separating from the cylinder head or cylinder block, the cylinder head should be removed and a new gasket installed as described under the Cylinder Head heading.

(15) Disengage the camshaft sprocket from the timing chain and remove the sprocket from the engine.

(16) Lower the timing chain through the cylinder head and slide the crankshaft sprocket off the front of the crankshaft.

TO CHECK AND INSPECT

(1) Wash all components in cleaning solvent and lay out on clean paper for inspection.

(2) Check the sprockets for wear on the teeth and the timing chain for wear on the rollers. Renew worn components as necessary.

(3) If the chain guide is broken or excessively worn, remove the two retaining bolts and remove the chain guide from the engine.

Instal the new chain guide to the engine and securely tighten the retaining bolts.

(4) If the chain damper is broken or excessively worn, remove the retaining/pivot/bolt and remove the chain damper from the engine. Withdraw the sleeve from the chain damper.

Instal the sleeve in the new chain damper, instal the damper to the engine and securely tighten the retaining/pivot bolt. Ensure that the damper pivots freely.

(5) Dismantle and inspect the chain tensioner. Check the spring for loss of tension and broken coils and renew as necessary. Ensure that the oil holes in the body are not blocked.

(6) Instal a new timing cover seal into the front of the timing cover. Use a suitable tubular drift to remove the old seal and to instal the new one.

(7) Inspect the oil seal running surface of the crankshaft pulley and remove any small grooves or nicks with wet or dry emery paper. A badly grooved crankshaft pulley should be renewed.

TO INSTAL

Installation is a reversal of the removal procedure with attention to the following points:

(1) Engage the timing chain onto the crankshaft sprocket so that the mark on the crankshaft sprocket is aligned with the bright link on the timing chain as noted during the removal procedure. Instal the sprocket and the timing chain to the crankshaft.

(2) Lift the timing chain up through the aperture in front of the cylinder head. Engage the camshaft sprocket to the chain so that the mark on the camshaft sprocket is aligned with the second bright link. Refer to the illustration if neccessary.

NOTE: If the new timing chain does not have bright links, the position of these links should be transposed from the old chain.

(3) Instal the camshaft to the camshaft sprocket and assemble the rocker arms and shafts as described under the relevant headings.

(4) Adhere the new timing cover gaskets to the face of the cylinder block with a suitable sealing compound. Instal the timing cover and securely tighten the retaining bolts.

(5) Prior to installing the timing chain tensioner, unlock the sleeve on the timing chain tensioner by using a suitable tool and pushing the top of the ratchet inwards and disengaging it from the sleeve. Push the sleeve fully inwards and connect the stop lever with the pin on the sleeve. Release the ratchet and instal the chain tensioner using a new gasket. Instal and tighten securely the chain tensioner retaining bolts.

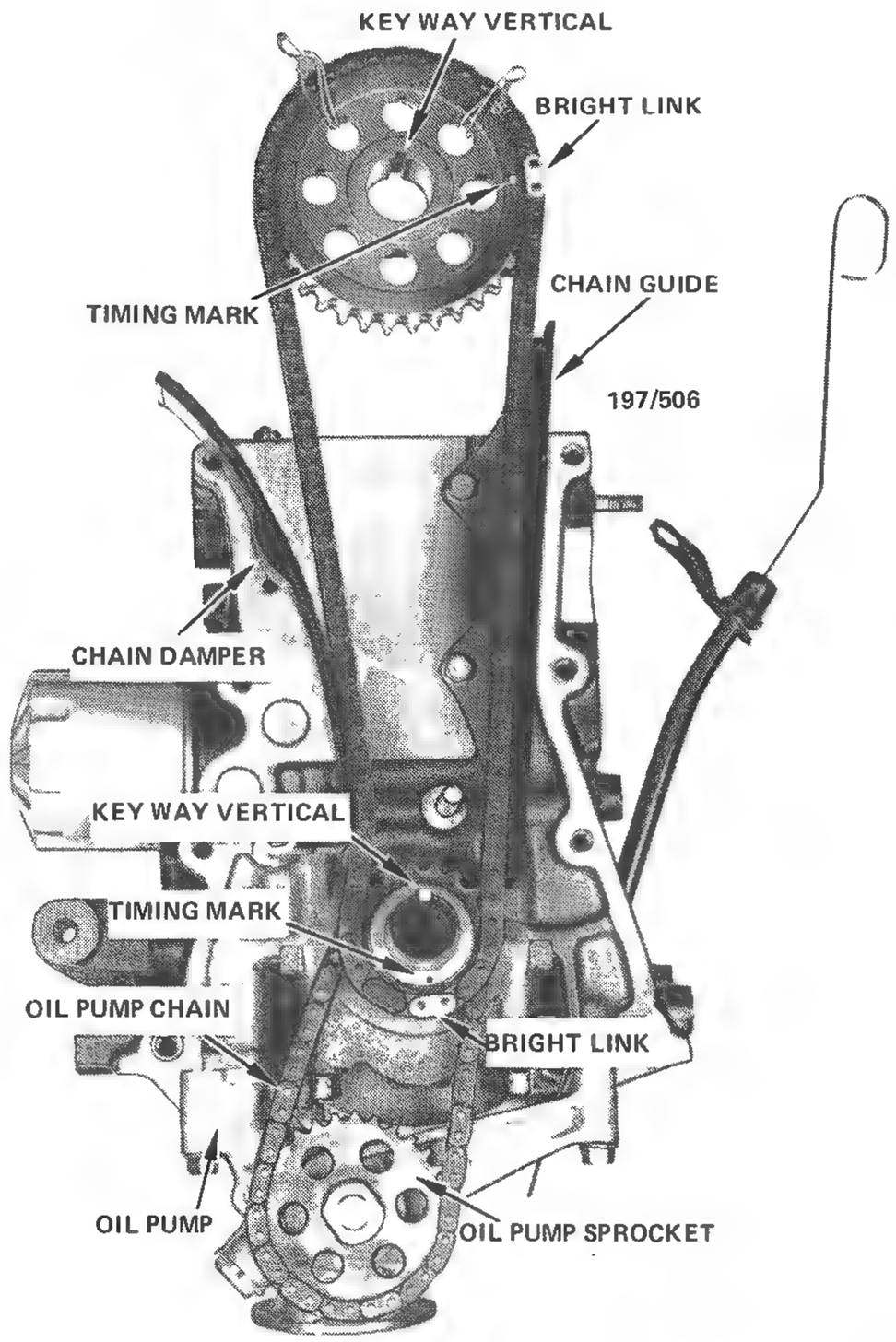

View of timing chain and components showing correct timed position of timing chain and sprockets.

NOTE: As soon as the crankshaft has made one or two turns, the stop lever will disconnect itself from the pin and is adjusted automatically.

(6) Instal and securely tighten the bolt securing the cylinder head to the timing cover.

(7) Using an approved liquid sealing compound apply the compound to the engine sump and instal the sump. Securely tighten the retaining bolts.

(8) Instal the water pump with a new gasket to the front of the cylinder block.

(9) Instal the crankshaft pulley and instal and tighten the retaining bolt. Ensure the timing cover oil seal is lubricated with grease before the pulley is installed.

(10) Check the valve clearances as described in the Engine Tune-up section and instal the rocker cover.

(11) Instal the alternator mounting bracket and alternator to the engine. Adjust the drive belt as described in the Engine Tune-up section.

(12) Instal the engine to the vehicle as previously described.

(13) Fill the engine sump with the correct grade and quantity of oil. Fill the radiator with the approved coolant.

(14) Start and run the engine and check for water and oil leaks.

(15) With the engine hot, check and adjust the valve clearances and the ignition timing.

TO RENEW TIMING COVER OIL SEAL – ENGINE IN VEHICLE

(1) Open the engine bonnet and fit fender covers to both front fenders.

(2) Disconnect the battery earth lead.

(3) Raise the front of the vehicle and support it on chassis stands.

(4) Remove the right hand side front wheel.

(5) Remove the splash guards from beneath the engine assembly, on the right hand side only.

(6) Loosen the alternator mounting bolt and adjusting bolt. Remove the drive belt.

(7) Remove the crankshaft pulley retaining bolt and withdraw the crankshaft pulley from the crankshaft.

(8) Prise the oil seal from the timing cover, without damaging the oil seal recess.

(9) Clean the oil seal recess and remove all nicks and burrs. Apply a light coat of sealing compound to the seal recess.

(10) Drive the new oil seal into the recess squarely using a tubular drift. Ensure that the lip of the oil seal faces the inside of the timing cover.

(11) Inspect the oil seal running surface of the crankshaft pulley and remove any small grooves or nicks with wet or dry emery paper. A badly grooved crankshaft pulley should be renewed.

(12) Lubricate the seal lip with clean engine oil and instal the crankshaft pulley. Instal and tighten the crankshaft pulley retaining bolt securely.

(13) Further installation is a reversal of the removal procedure.

11. PISTONS, CONNECTING RODS AND CYLINDER BORES

Special Equipment Required:

To Remove Ridge from Bores – Ridge removal tool
To Inspect – Micrometer, cylinder measuring gauge
To Deglaze Cylinder Bores – Cylinder surfacing hone
To Instal – Piston ring expanding tool, piston ring compressor

TO REMOVE PISTONS AND CONNECTING RODS

(1) Remove the engine from the vehicle as previously described.

(2) Place the engine on a suitable bench or engine stand and remove the following components, referring if necessary to the relevant sections: Cylinder head, timing cover, engine sump, oil pump, the flywheel or drive plate, and the rear engine plate.

NOTE: It is possible to renew the connecting rod bearings with the engine in position. By removing the sump and the oil pump, adequate accessability will be achieved.

Though if the crankshaft requires grinding, then obviously the engine must be removed from the vehicle.

(3) Check that the connecting rods and bearing caps are numbered and note their fitted positions for correct assembly.

NOTE: If the connecting rod and big end bearing caps are not numbered, mark the caps in relation to the connecting rods and the connecting rods and piston assemblies in relation to the cylinders from which they are removed.

(4) Check the end float of each connecting rod big end using a feeler gauge.

(5) Using a ridge removal tool, remove the ridge from the top of each cylinder where apparent.

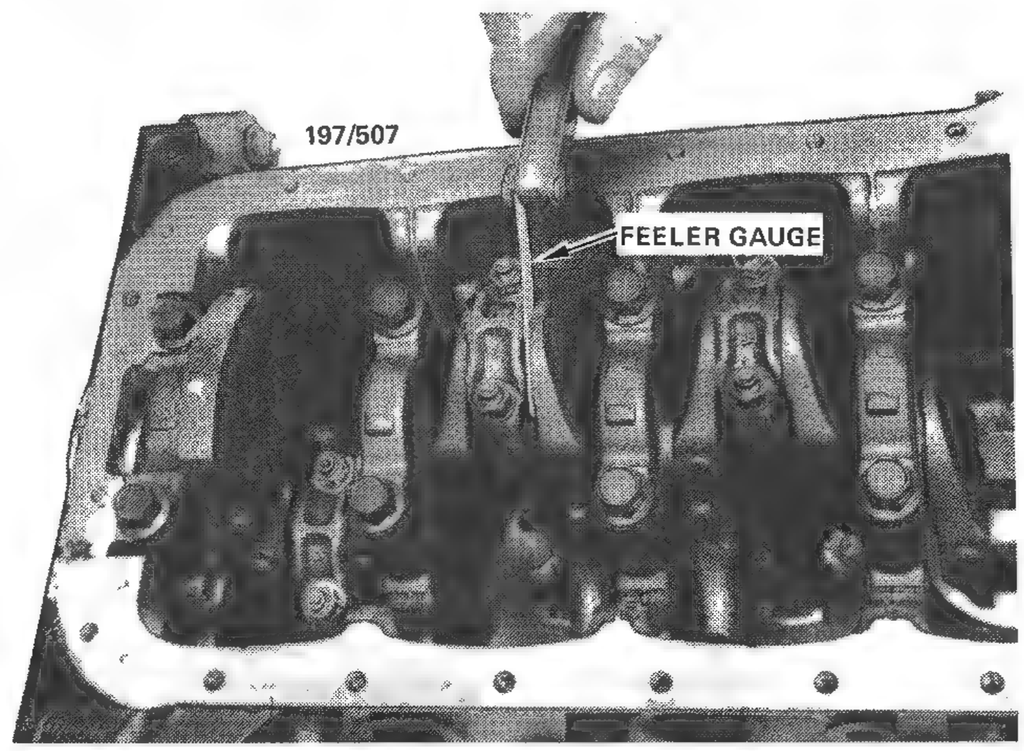

Checking connecting rod clearance using feeler gauges.

(6) With number one piston at the bottom of its stroke remove the bearing cap nuts and the bearing cap.

Wipe the bearing shell and the exposed part of the journal with a piece of clean lint free cloth, insert a piece of Plastigage across the journal, instal the bearing cap and torque the nuts to Specifications.

Remove the nuts and cap and measure (with the scale on the packet) the spread width of the Plastigage to determine the bearing clearance.

Compare the measurement to Specifications and if the bearing clearance exceeds the limit use new bearing shells on assembly.

Repeat the procedure on the remaining bearings and note each individual bearing clearance for assembly purposes.

(7) Remove each bearing cap in turn keeping them in order and, using a wooden hammer handle, push each piston assembly from the cylinder block and instal its respective cap and bearing shells.

(8) Remove the piston rings over the top of the piston and discard the piston rings.

TO INSPECT PISTONS AND CONNECTING RODS

(1) Inspect the pistons for scuff marks, scoring or burning.

(2) Clean all traces of carbon from the piston crowns and using a piece of broken ring, clean out the ring grooves.

(3) Inspect the ring grooves of each piston for excessive wear, use a new piston ring and check the clearance of each ring in the ring grooves. Compare the clearance with Specifications.

(4) Inspect each pair of bearing shells for wear on an outer edge only. If one or more pairs of the bearing shells are worn on the outer edge it is possible that the connecting rods are bent.

(5) Before renewing a piston and/or connecting rod inspect the cylinder block to see if it requires reboring or honing. If the cylinder block requires reboring it is obvious that new pistons will have to be used.

NOTE: The semi floating gudgeon pins are an interference fit in the connecting rod and damage will be done to the piston if these pins are removed without the special equipment.

If a piston, gudgeon pin or connecting rod is to be renewed, it should be renewed by an engine reconditioning shop as special tools and a hydraulic press are required to remove and instal the gudgeon pin.

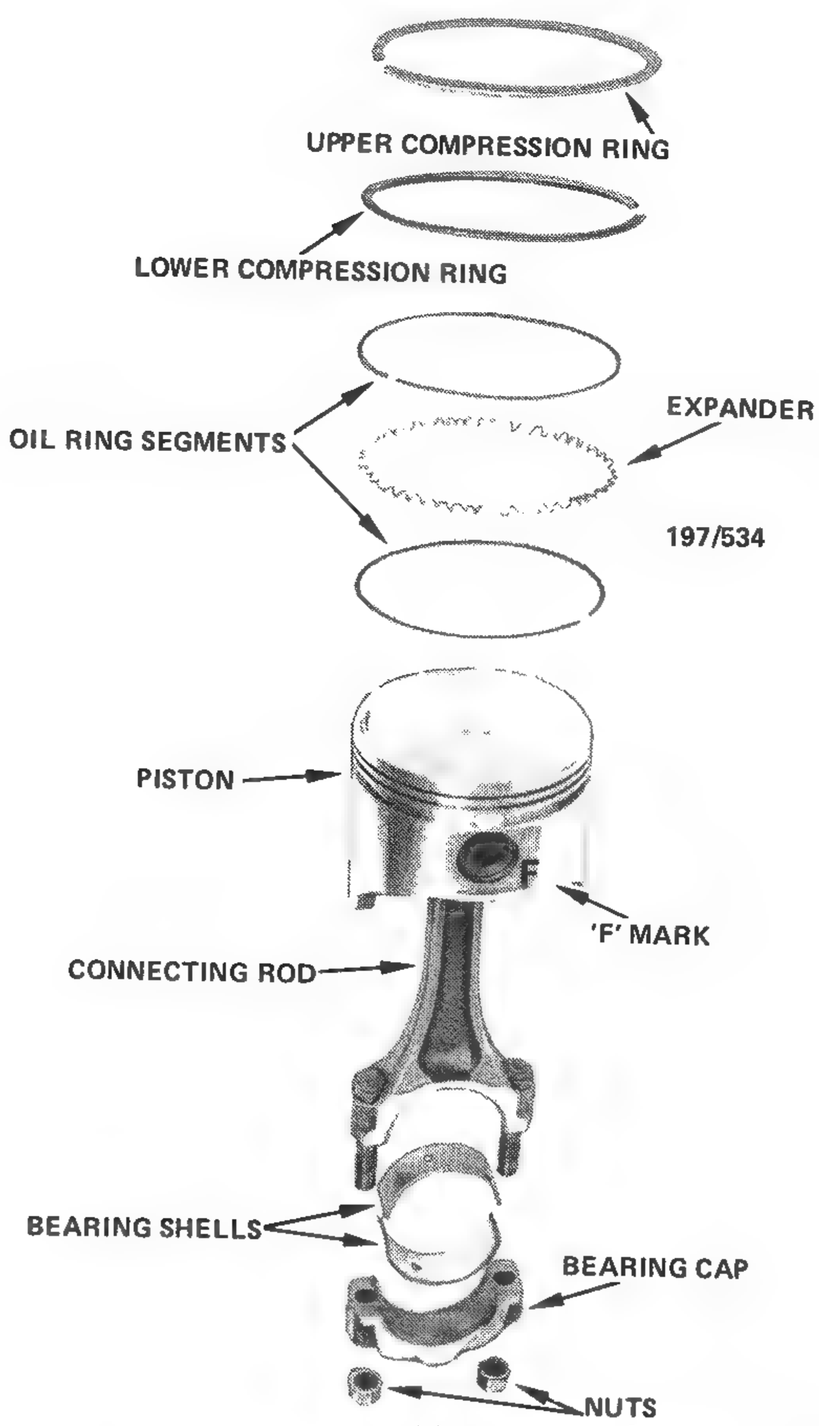

Dismantled view of piston and connecting rod components.

TO INSPECT CYLINDER BLOCK AND BORES

With the pistons removed as previously described carry out the following checks and measuring procedures:

(1) Check the cylinder bores for cracks, scores or scuffs.

(2) Using an accurate cylinder gauge, measure each cylinder bore for wear, ovality and taper.

Take the measurements at the upper, middle and lower sections of the bore in two directions – along and across the block.

(3) Take the minimum and maximum dimensions of the six measurements. The difference between them can be regarded as the nominal amount of wear present in the bore.

(4) If the wear in any cylinder exceeds the specified limits for taper or out of round, rebore and hone all cylinders to the nearest oversize for pistons and rings.

NOTE: The cylinder that is most worn will be the one that determines which oversize is applicable.

(5) With a straight edge and feeler gauge, check the top face of the cylinder block for warpage. See Specifications for warpage limits.

NOTE: If the top of the cylinder block is warped, remove the crankshaft and instal the timing cover to the front of the cylinder block. Have the top face of the cylinder block and the timing cover machined as an assembly.

(6) If the engine is completely dismantled thoroughly clean the cylinder block with a suitable solvent and compressed air paying particular attention to the oilways. Inspect the block for cracks and damage.

TO CHECK PISTON CLEARANCE

(1) Using an accurate cylinder measuring gauge measure and note the diameter of each bore as previously described.

(2) Measure each piston skirt at a point 18 mm below the oil ring groove and at right angles to the gudgeon pin axis.

(3) The difference between the bore and the piston skirt measurement is the piston clearance. If the piston clearance exceeds Specifications then renew the piston or bore and hone the cylinder, whichever is necessary.

(4) Cylinders that have been rebored and honed to take the appropriate oversize pistons should have the piston clearances checked in the manner described.

TO DEGLAZE CYLINDER BORES

Cylinder bores that are fit for further service but require re-ringing should be deglazed with a hone.

(1) Use a surfacing hone with 280 grit stones for deglazing.

NOTE: When deglazing cylinder bores with the crankshaft installed, plenty of clean rag should be placed over the crankshaft to keep abrasive materials from entering the oilways.

(2) Move the hone up and down the cylinder walls sufficiently fast enough to achieve a cross hatch pattern.

The cross hatch pattern most satisfactory for correct seating of piston rings is when the hone marks intersect at 60 degrees.

NOTE: When deglazing, the cylinder should be honed only sufficiently to eliminate the glazed condition. Excessive honing will increase bore size and piston clearance.

(3) Use only honing oil for lubrication. Do not use engine oil or transmission oil, mineral spirits or kerosene.

(4) When honing is completed, ensure that the cylinder bore, crankcase area and oilways are thoroughly cleaned.

(5) After the cylinder block has been cleaned and dried, wipe the bores with a lint free cloth then smear them with engine oil to prevent rusting.

TO FIT NEW PISTON RINGS AND INSTAL

Once the correct piston and bore relationship has been determined and the pistons have been cleaned or renewed as necessary proceed as follows:

(1) Select a set of rings to suit the bore, standard or oversize, whichever is necessary.

(2) Place a ring into number one cylinder bore and using an inverted piston, push the ring down into the bottom of the cylinder bore.

(3) Withdraw the piston and measure the gap in the ring with feeler gauges. If necessary adjust the ring end gap of the ring by filing. See Specifications for ring end gap.

(4) Treat each ring and cylinder bore individually

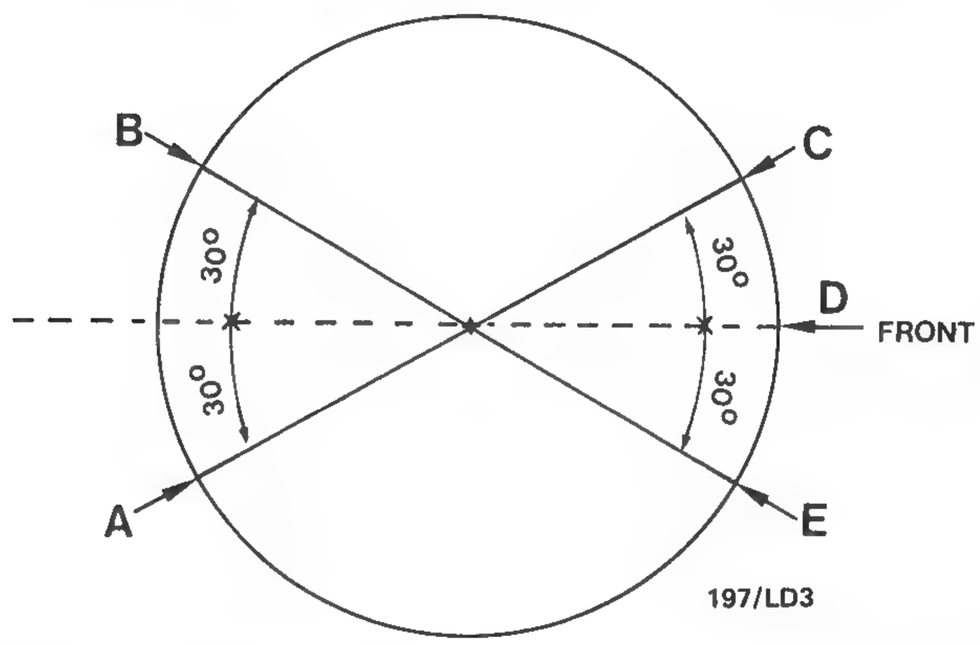

Diagram showing the piston ring gap position prior to installing the piston.
A = top compression ring. B = lower compression ring. C = top oil ring segment. D = oil ring expander. E = lower oil ring segment.

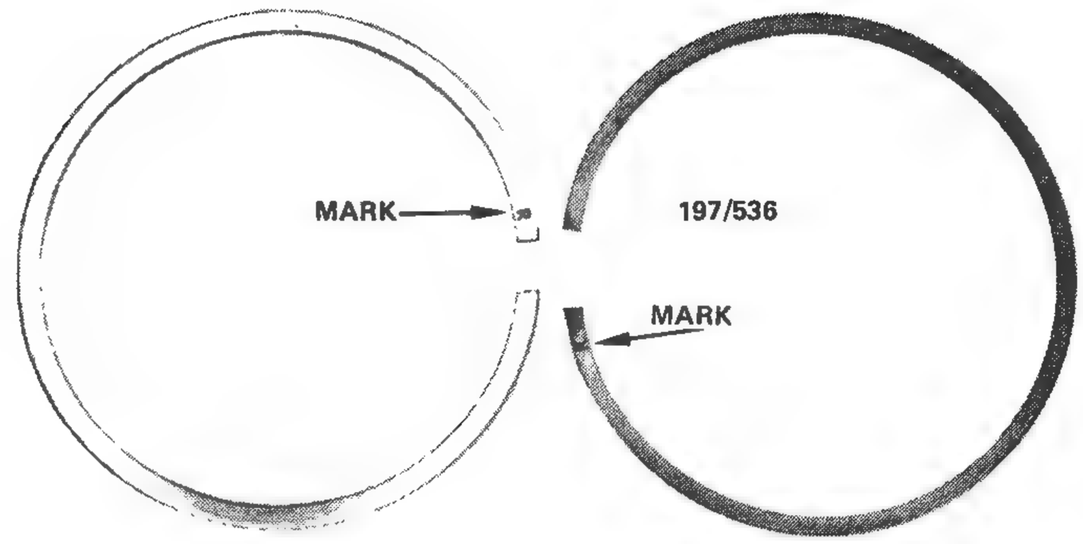

Instal the piston rings with the code marks towards the top of the piston.

and ensure that the rings are assembled to the piston for the cylinder bore in which they were fitted for the end gap check.

(5) Place the oil ring expander into its groove in the piston.

(6) Fit one oil ring segment from the top end of the piston into the oil ring groove.

(7) Fit the other oil ring segment from the bottom of the piston into the oil ring groove.

(8) The gap in the oil ring expander must not overlap and the gaps of the two segments and the expander should be arranged as shown in the diagram.

(9) Using the same procedure fit the oil control rings to the remaining pistons.

(10) Using a piston ring expanding tool fit the lower compression ring to each piston.

(11) Assemble each upper compression ring to its respective piston in the same manner.

NOTE: Instal each of the compression rings with the code marks uppermost.

(12) With the rings correctly installed and positioned on the pistons, see diagram, remove the bearing cap from each of the connecting rods.

NOTE: The pistons have no markings on the crown but are marked with an 'F' on the gudgeon pin boss to indicate the front of the engine.

(13) Turn the crankshaft so that number one journal is at the bottom of its stroke. Lubricate number one piston with engine oil and instal the piston assembly to a piston ring compressor tool.

(14) Instal the piston and connecting rod assembly into number one cylinder bore so that the 'F' mark on the gudgeon pin boss is to the front of the engine.

NOTE: Connecting rods and piston assemblies must be replaced in the cylinders from which they were removed on dismantling.

(15) Push the piston assembly down the cylinder bore and align the connecting rod and upper half of the big end bearing shell on the crankshaft crankpin.

NOTE: The bearing shells should be lubricated with engine oil before installation.

(16) If on dismantling it was found that new bearing shells were needed, place them into the connecting rod and cap before installing the cap to the connecting rod.

(17) Instal the bearing cap, fit the retaining nuts and torque to Specifications.

(18) If new bearing shells were installed recheck the bearing clearance as previously described.

(19) Instal the remaining pistons in the same manner.

(20) With all connecting rod cap nuts torqued to Specifications, instal the associated components by referring to the various sections. Instal the engine assembly to the vehicle.

12. CRANKSHAFT AND MAIN BEARINGS

Special Equipment Required:
To Check End Float – Dial gauge
To Measure Journals – Micrometer

TO REMOVE

(1) With the engine assembly removed from the vehicle, refer to the appropriate sections and remove the following components: Cylinder head, sump and oil pump, timing sprockets and chains, flywheel or drive plate.

(2) Ensure that all main bearing and connecting rod bearing caps are numbered to facilitate correct assembly.

(3) Remove the connecting rod nuts and caps, keeping them in order and push each piston and connecting rod slightly into the cylinder bore without pushing the piston from the bore.

(4) Check the crankshaft end float by inserting a feeler gauge between the shaft and the rear main bearing or by mounting a dial gauge with its plunger against the rear of the crankshaft.

(5) Lever the crankshaft away from the rear main bearing, zero the dial gauge, then lever the crankshaft back towards the rear main bearing to determine the end float.

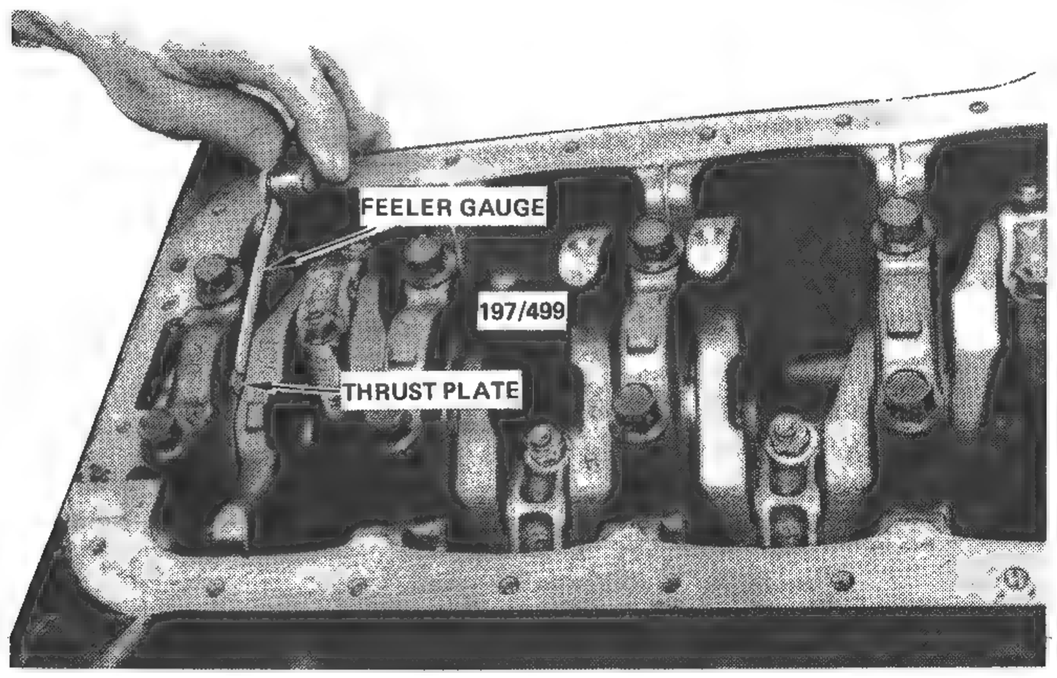

Checking crankshaft end float at rear main bearing using feeler gauges.

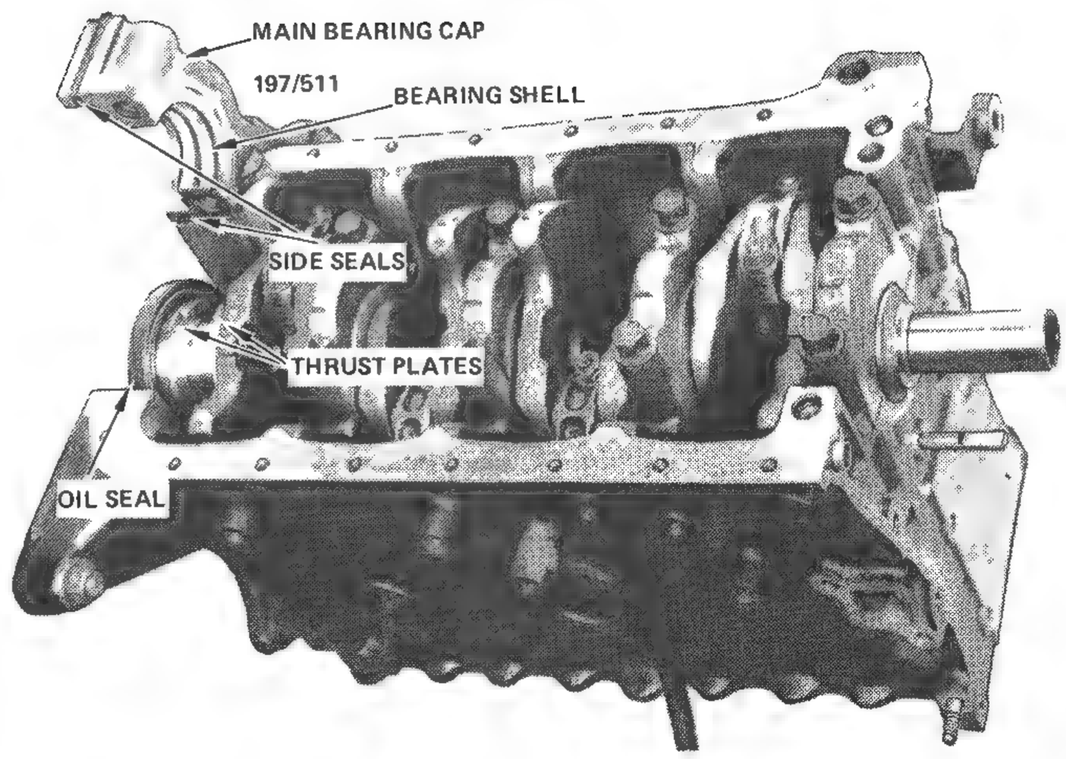

View of engine with rear main bearing cap removed.

(6) If the clearance exceeds Specifications then the thrust plates at the rear main bearing must be renewed on assembly.

(7) Check the main bearing clearance using the Plastigage method as follows:

(a) Remove the bearing cap and with a piece of lint free cloth wipe the journal and bearing clean.

(b) Position a piece of Plastigage the approximate length of the bearing width onto the bearing surface of the crankshaft journal.

(c) Instal the main bearing cap and tighten the bolts to the specified torque.

NOTE: Do not rotate the shaft while the Plastigage is in position.

(d) Remove the cap bolts and carefully detach the cap and lower bearing shell.

(e) Measure the spread width of the Plastigage with the scale on the packet to determine the main bearing oil clearance.

(f) Compare the measurement to Specifications and if the bearing clearance exceeds the limit use new bearing shells on assembly.

The remaining bearings should also be checked using the same procedure.

NOTE: To remove the rear main bearing cap, instal the sump retaining bolts to their holes in the bearing cap and lever the cap out of its fitted position using suitable levers.

(8) Remove all bearing caps and carefully lift the crankshaft from the crankcase using care not to dislodge or damage the upper halves of the main bearing shells. Discard the crankshaft rear oil seal.

(9) If new bearing shells are to be installed, remove the upper halves of the bearings from the crankcase.

TO CHECK AND INSPECT

After thoroughly cleaning the crankshaft in a suitable solvent and drying it off with compressed air, blow out all the oil ways and make the following checks:

(1) Visually inspect the crankshaft for damage and scoring. If the crankshaft is undamaged measure the main bearing journals and crankpins for wear and taper. If wear or taper is beyond the specified limits then the crankshaft must be reground to the nearest undersize and the bearings renewed.

(2) One worn or damaged journal or crankpin will necessitate the grinding of all journals or crankpins and the fitting of new undersize bearing shells. If wear or damage is such that the journals or crankpins cannot be reground to take any one range of the available undersize bearings, then the crankshaft will have to be renewed.

(3) Check the wearing surfaces of the rear main bearing thrust plates for pitting. If pitting is evident or if the plates were found to be worn excessively when checking the crankshaft end float, then renew the thrust plates.

(4) Even when the bearing oil clearance has been found to be satisfactory, inspect the bearing shells for scores, flaking and pitting. Renew as necessary with shells of the appropriate size.

TO INSTAL

Installation is a reversal of the removal procedure with attention to the following points:

(1) Ensure that all the oil ways are clear and that all journals and crankpins have been thoroughly cleaned. Ensure that the new or original bearing shells have been cleaned and then smeared with new engine oil and that they are correctly positioned in their respective web, connecting rod or cap.

(2) Instal new thrust plates as necessary to the rear main bearing web and cap with the oil groove sides towards the crankshaft.

(3) Carefully place the crankshaft in position in the cylinder block ensuring that the thrust plates are not jammed or dislodged and guide the connecting rods to their respective crankpins.

(4) Instal the crankshaft oil seal to the end of the crankshaft after applying grease to the lip of the oil seal.

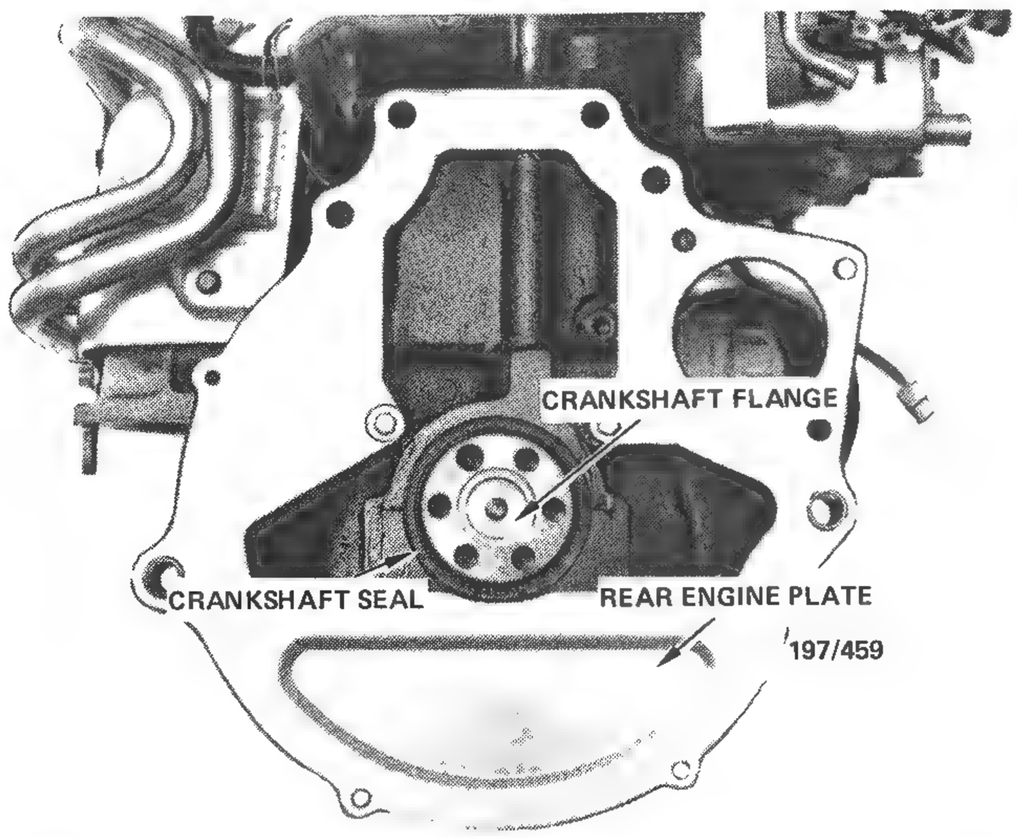

View of rear engine plate and crankshaft rear seal.

Ensure that the open end of the seal is facing toward the engine.

(5) Renew the side seals in the rear main bearing cap ensuring that the holes in the seals point either towards the centre or outside of the main bearing cap.

(6) If new bearing shells were installed recheck the bearing clearance using the Plastigage method as previously described.

(7) Tighten the main bearing cap bolts and the connecting rod cap nuts to their respective tensions and rotate the crankshaft to check for binding.

(8) Instal the remainder of the engine components following the procedures laid down under the relevant headings.

13. FLYWHEEL/DRIVE PLATE

Special Equipment Required:
To Renew Ring Gear – Suitable heat source

TO REMOVE AND INSTAL

(1) Remove the transmission from the engine as described in the manual or automatic transmission sections, whichever is applicable.

(2) On manual transmission models, mark the flywheel and the clutch pressure plate cover to ensure correct assembly. Progressively loosen and remove the pressure plate retaining bolts. Remove the pressure plate and the clutch plate from the flywheel.

(3) Remove the flywheel or drive plate retaining bolts and remove the flywheel or drive plate from the vehicle.

Installation is a reversal of the removal procedure with attention to the following points:

Tighten the flywheel or drive plate retaining bolts to the specified torque and on manual transmission models align the clutch plate as described in the Clutch section.

TO CHECK AND INSPECT

(1) Inspect the clutch face of the flywheel for cracks or excessive scoring.

(2) Inspect the ring gear teeth for damage, cracks or wear. The ring gear on manual transmission models can be renewed separately from the flywheel but on automatic transmission models the complete drive plate must be renewed.

(3) Inspect the drive plate mounting bolt holes for wear caused by loose mounting bolts.

(4) Inspect the drive plate for cracks.

TO RENEW FLYWHEEL RING GEAR

(1) With the flywheel removed from the vehicle, drill a 3 mm diameter hole between two teeth of the ring gear.

> *NOTE: Do not drill right through the ring gear as this will damage the flange on the flywheel.*

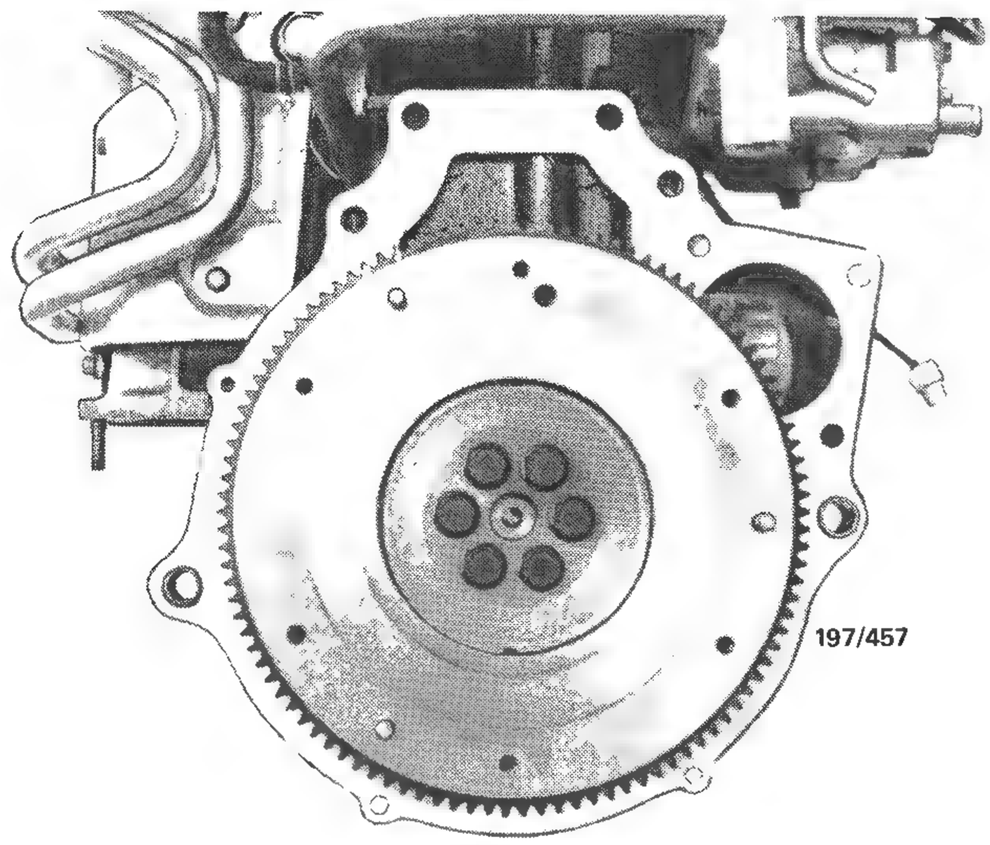

View of flywheel installed to engine.

(2) Secure the flywheel, with the drilled hole uppermost, in a vice fitted with soft jaws.

(3) Place a cold chisel above the hole in the ring gear and hit it sharply to split the ring gear.

(4) Check the direction of the teeth leading edges of the old ring gear. The new ring gear must be installed to the flywheel with the teeth leading edges in the same direction.

(5) Remove the ring gear, clean the mounting face on the flywheel and remove any burrs.

(6) Polish a few spots of the ring gear with emery cloth and heat the ring gear evenly until the polished spots turn dark blue.

NOTE: Do not heat the ring gear past the point required to achieve a dark blue colour or the tempering of the ring gear teeth will be impaired.

(7) With the flywheel suitably supported pick the ring up, using pliers, and place it evenly onto the flywheel. Ensure that the ring gear seats against the flywheel flange.

NOTE: Allow the ring gear to cool slowly. Do not quench in water.

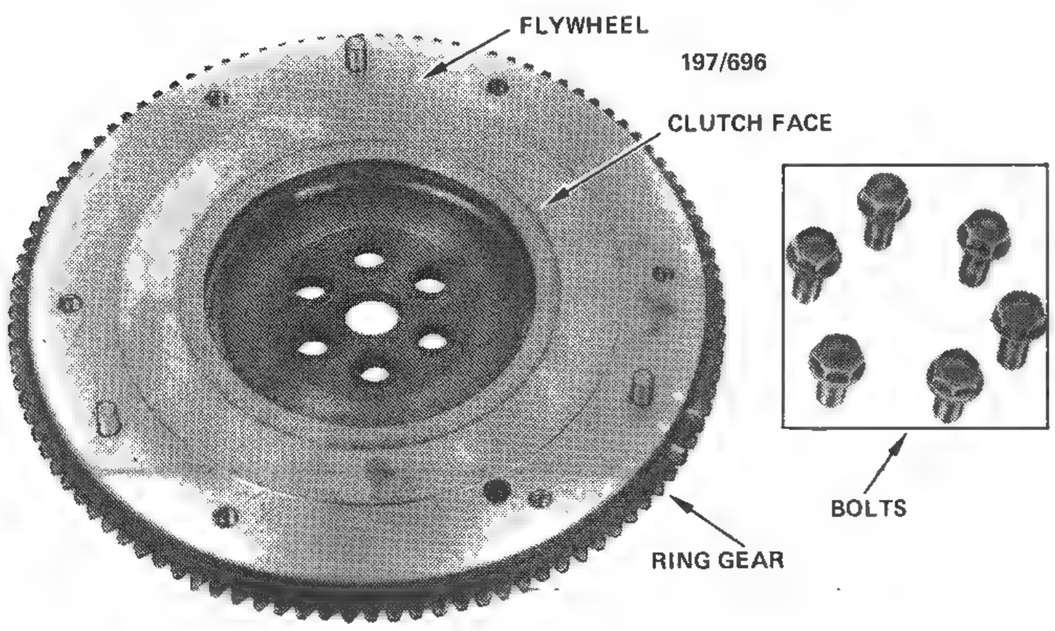

View of flywheel and retaining bolts.

14. ENGINE MOUNTINGS

FRONT AND REAR MOUNTING

To Remove and Instal

(1) Open the engine bonnet and fit fender covers to both front fenders.

(2) Raise the front of the vehicle, support on chassis stands and remove the splash guards.

(3) Place a jack under the transmission to take the weight of the engine and transmission assembly.

(4) Working inside the engine compartment remove the nut and washer retaining the front mounting to the crossmember.

(5) Remove the bolts retaining the front engine mounting bracket to the transmission. Withdraw the engine mounting and bracket assembly.

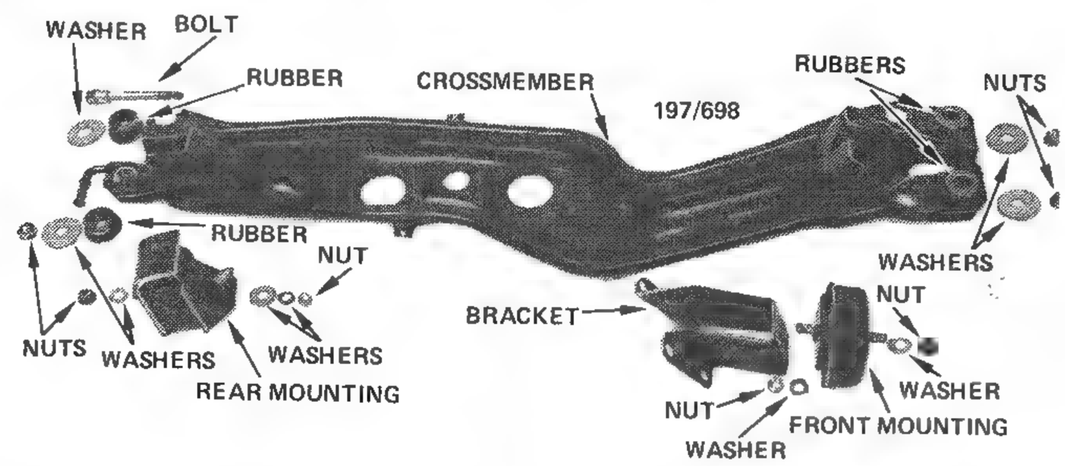

View of crossmember and front and rear engine mountings.

(6) Separate the mounting and the bracket by removing the retaining nut and washer.

(7) To remove the rear engine mounting, remove the nuts and washers retaining the rear engine mounting to the transmission bracket and the crossmember.

(8) Raise the transmission slightly more and remove the rear engine mounting.

NOTE: Engine mountings that are oil soaked should be renewed and the cause of the oil leak rectified to ensure a normal working life for the new mounting.

Installation is a reversal of the removal procedure ensuring that the mountings are centralised and that the engine and transmission weight is taken on the mountings before finally tightening the mounting bolts and nuts.

RIGHT HAND SIDE MOUNTING

To Remove and Instal

(1) Open the bonnet and fit fender covers to both front fenders. Disconnect the battery earth lead.

(2) Raise the front of the vehicle and support on chassis stands. Remove the splash guards on the right hand side only.

(3) Place a jack under the engine sump. Use a block of wood between the jack head and the sump to protect the sump.

(4) Take the weight of the engine and remove the alternator adjusting bolt.

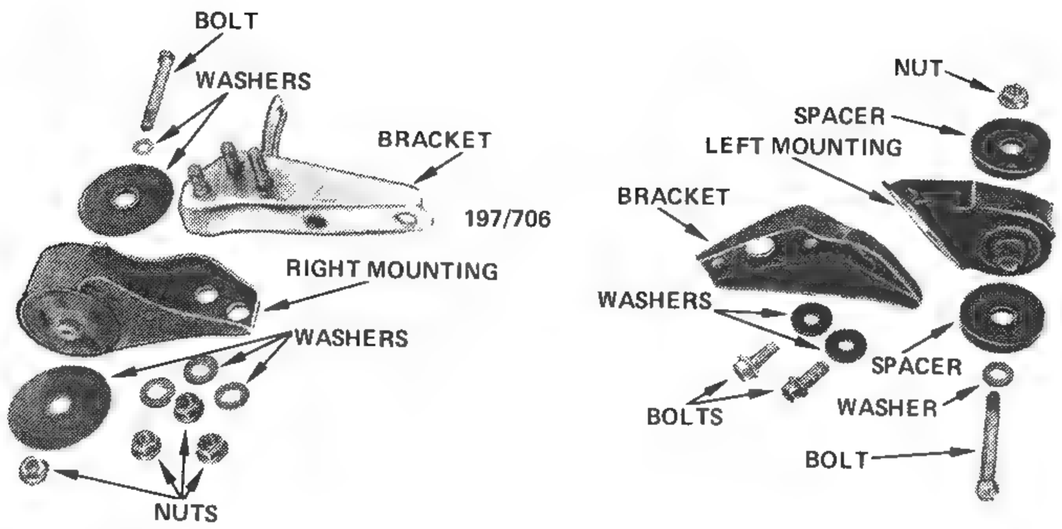

View of left and right hand side engine mountings.

(5) Remove the engine mounting to body frame bracket retaining bolt and nut.

(6) Remove the bolts that retain the engine mounting bracket to the cylinder block. Withdraw the engine mounting, the large rubber washers and the mounting bracket.

(7) Remove the retaining nuts to separate the engine mounting and the mounting bracket.

Installation is a reversal of the removal procedure ensuring that the full weight of the engine is on the mounting before finally tightening the retaining bolts and nuts.

Adjust the alternator drive belt tension.

LEFT HAND SIDE MOUNTING

To Remove and Instal

(1) Open the bonnet and fit fender covers to both front fenders.

(2) Raise the front of the vehicle and support on chassis stands. Remove the splash guards on the left hand side only.

(3) Working beneath the vehicle, remove the engine mounting to body frame bracket retaining bolt and nut.

(4) Remove the bolts retaining the engine mounting bracket to the transmission. Remove the engine mounting and bracket assembly.

(5) Remove the retaining bolts to separate the mounting from the bracket.

Installation is a reversal of the removal procedure.

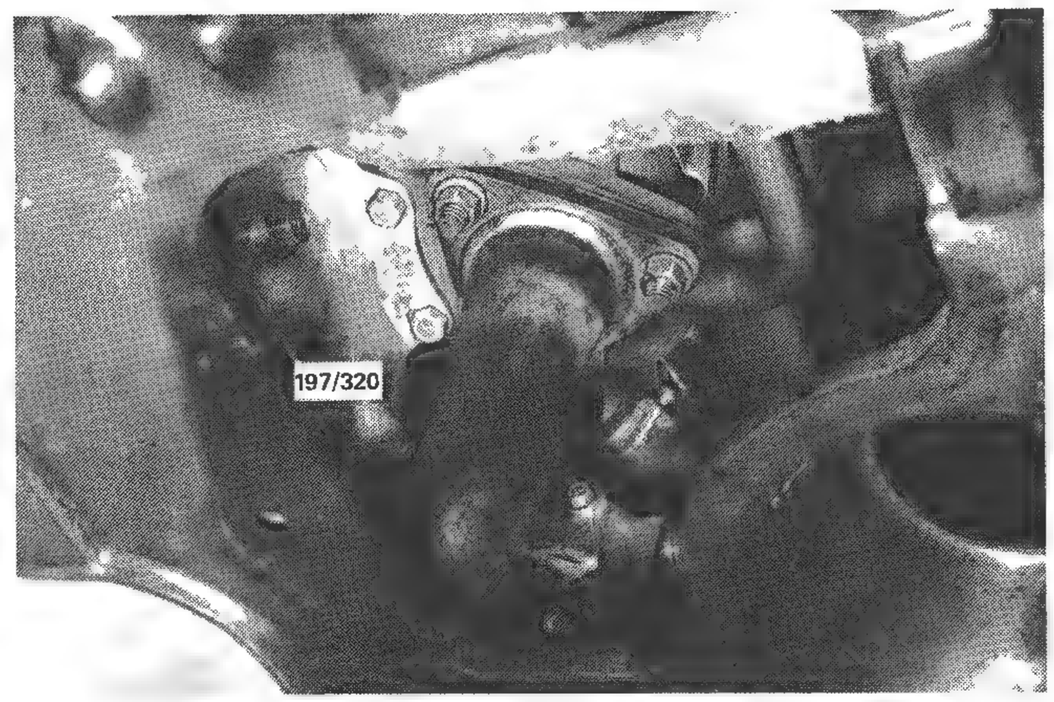

Soak the studs and nuts at the manifold and support bracket with a suitable rust loosening and lubrication solution before loosening the studs and nuts.

15. EXHAUST SYSTEM

TO REMOVE AND INSTAL

(1) Raise the front and rear of the vehicle and support on chassis stands.

(2) Open the engine bonnet, fit fender covers to both front fenders and disconnect the battery earth lead.

(3) Remove the front exhaust pipe and pipe support bracket at the exhaust manifold flange and cylinder block.

NOTE: It is advisable to soak the bolts and nuts at the exhaust manifold with a suitable rust loosening and lubricating solution to prevent the bolts and nuts from breaking when removing the bolts and nuts.

(4) Remove the retaining bolts from the joint in front of the front muffler and remove the front pipe, support bracket and heat shield assembly from the vehicle.

(5) Remove the bolt and nut from the clamp at the tailpipe, open up the clamp and slip the tailpipe from its mounting rubber. Remove the tailpipe.

(6) With a suitable blunt tool, slip the mounting rubbers off the hooks at the front of the front muffler and at the front and rear of the rear muffler. Remove the

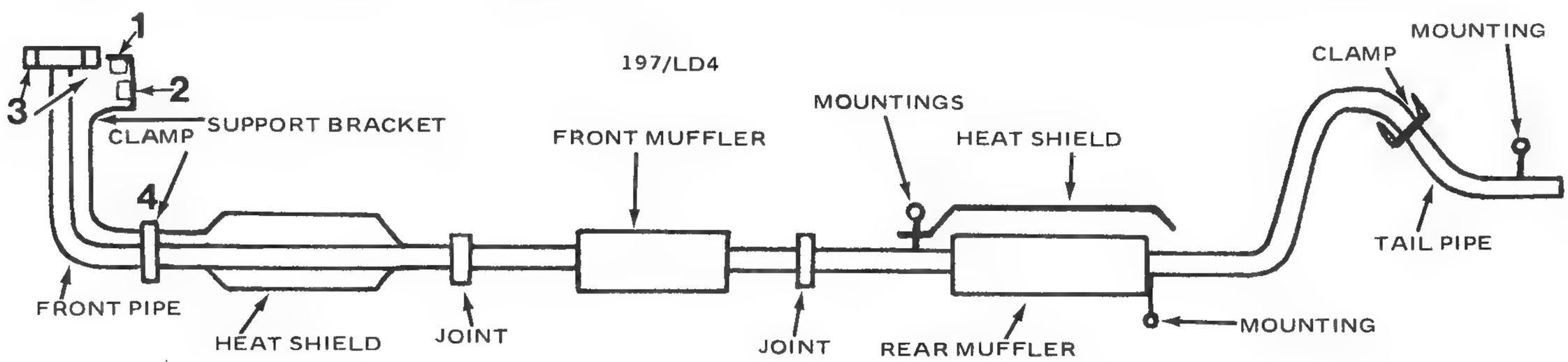

Schematic layout showing exhaust system components and front pipe and support bracket tightening sequence 1 = support bracket to exhaust manifold. 2 = support bracket to cylinder block. 3 = exhaust pipe to exhaust manifold. 4 = support bracket to exhaust pipe clamp.

assembly from under the vehicle.

(7) Remove the bolts and nuts from the joint to separate the front muffler from the rear muffler.

NOTE: Should difficulty be experienced when separating the pipes and the muffler, they may be cut with a hacksaw or pipe cutter when a replacement system is to be installed. When heating 'frozen' joints to release them, take extreme care near floor pans, fuel or brake lines or electrical wiring.

(8) Carefully inspect the exhaust system and discard any components which are cracked, worn or corroded.

Installation is a reversal of the removal procedure with attention to the following points:

(1) Clean any carbon build up off the exhaust flange and muffler pipe joints.

(2) Renew the exhaust flange and muffler pipe joint gaskets where fitted.

(3) Fit all components and check the system for correct positioning before finally tightening the retaining bolts and nuts.

NOTE: When tightening the front pipe and support bracket to the manifold and the cylinder block, follow the numbered sequence as per the illustration.

SPECIFICATIONS

Water pump:	
Type	Centrifugal impeller
Drive	V belt
Thermostat:	
Type	Wax pellet
Starts to open	80.5–83.5 deg C
Fully open	95 deg C
Valve lift, minimum	8 mm
Radiator cap working pressure	104 kPa
Radiator type	Corrugated fin
Drive belt deflection	12–14 mm

1. COOLING SYSTEM TROUBLE SHOOTING

ENGINE OVERHEATING

(1) Broken or slipping water pump drive belt: Adjust or renew water pump drive belt.

(2) Loss of coolant: Determine whether coolant loss is due to overflow, external leakage or internal leakage and investigate under relevant heading.

(3) Obstructed air passage through radiator core from front to rear: Blow out obstruction from rear to front of radiator core with compressed air or water pressure.

(4) Faulty thermostat: Check and renew thermostat.

(5) Faulty electric fan motor or wiring: Check the electric fan motor and wiring. Repair or renew as necessary.

(6) Faulty electric fan relay or thermo switch: Check the relay, the thermo switch and the wiring. Repair or renew components as necessary.

(7) Poor circulation: Check and rectify as under Coolant Circulation Faulty.

(8) Incorrect ignition timing: Check and reset ignition timing as described in the Engine Tune-up section.

(9) Low engine oil level: Stop engine immediately and replenish oil in sump.

(10) Engine tight after overhaul: Stop engine and allow to cool off.

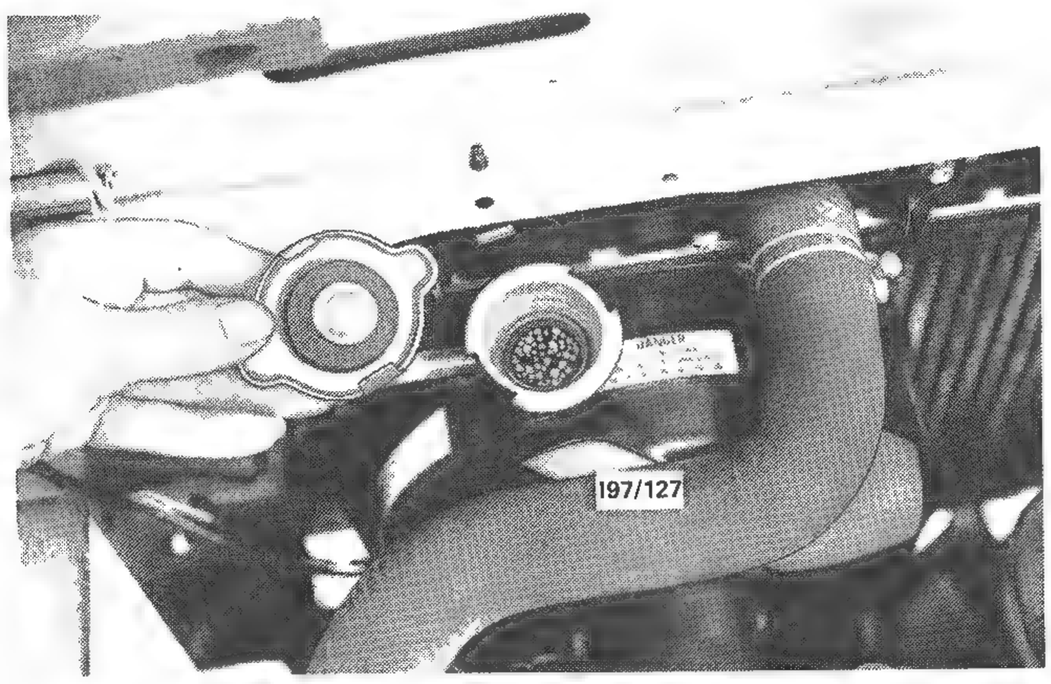

A blown head gasket is sometimes indicated by bubbles in the radiator coolant.

(11) Restricted muffler or tail pipe, accompanied by loss of power: Remove restrictions or renew components.

(12) Incorrectly adjusted or dragging brakes: Check and rectify by adjustment or renewal of components.

(13) Incorrect valve timing: Reset valve timing as described in the Engine section.

NOTE: Engine overheating is indicated by excessive rise in engine temperature shown by gauge. Overheating is usually accompanied by steam emitting from the radiator overflow pipe and loss of engine power. A blown head gasket is sometimes indicated by bubbles in the radiator coolant.

COOLANT LEAKAGE – EXTERNAL

(1) Loose hose clips or faulty hoses: Tighten hose clips or renew faulty hoses.

(2) Leaking radiator core or tanks: Repair or renew radiator.

(3) Worn or damaged water pump bearing or seal: Overhaul water pump.

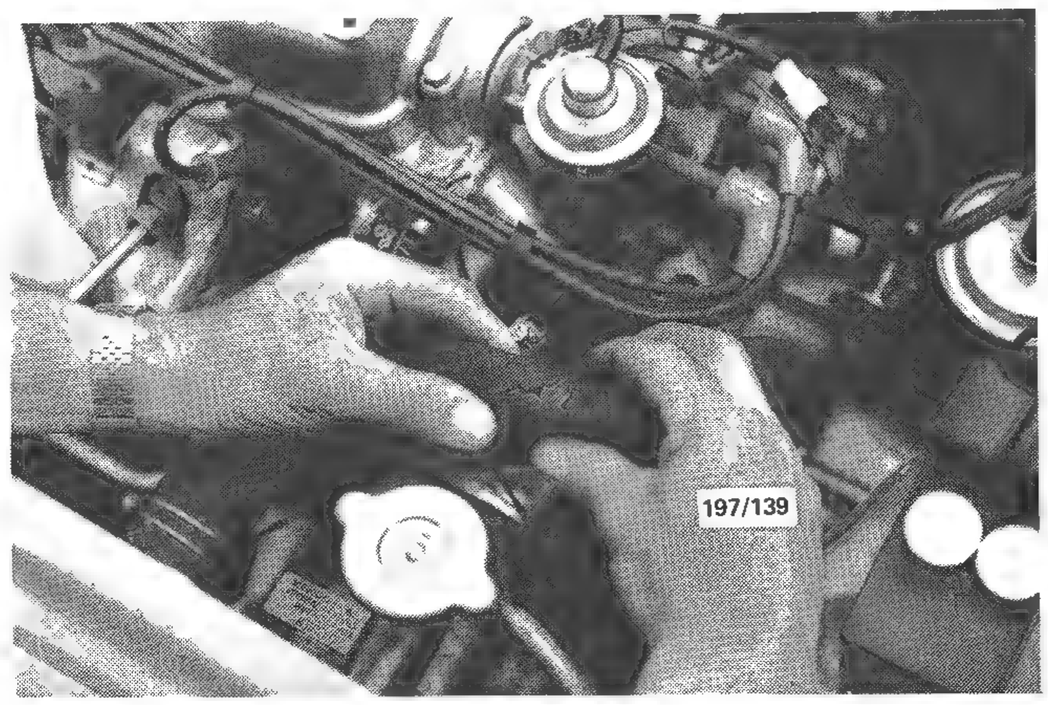

Checking for cracked or damaged radiator hoses.

(4) Loose or rusted welch plugs: Renew faulty welch plugs.

(5) External crack in cylinder block or head: Renew faulty components.

(6) Faulty cylinder head gasket or loose cylinder head bolts: Renew gasket and correctly tighten cylinder head bolts.

(7) Leaks at thermostat cover or water pump joint gasket: Renew gasket.

(8) Leaking heater core or valve: Repair or renew faulty components.

NOTE: Check system for external leakage by running vehicle engine to operating temperature over a dry floor and checking for leak source.

COOLANT LEAKAGE – INTERNAL

(1) Crack in cylinder head or cylinder block: Renew cylinder head or block as necessary.

(2) Cylinder head gasket leak due to warped cylinder head or cylinder block gasket faces: Reface cylinder head or block. Renew cylinder head gasket.

NOTE: Check engine for internal leakage by withdrawing dipstick and inspecting for emulsified oil. Also run engine and check for excesssive steam and emulsified oil at exhaust pipe which would indicate water leakage into the combustion chambers.

COOLANT LOSS BY OVERFLOW

(1) Faulty radiator pressure cap: Renew faulty radiator pressure cap.

(2) Blocked radiator core tubes: Clean or renew radiator core.

(3) Coolant foaming due to poor quality anti-freeze or corrosion inhibitor: Drain system and renew coolant and additive.

NOTE: Coolant loss by overflow is indicated by excessive loss of coolant from radiator overflow pipe.

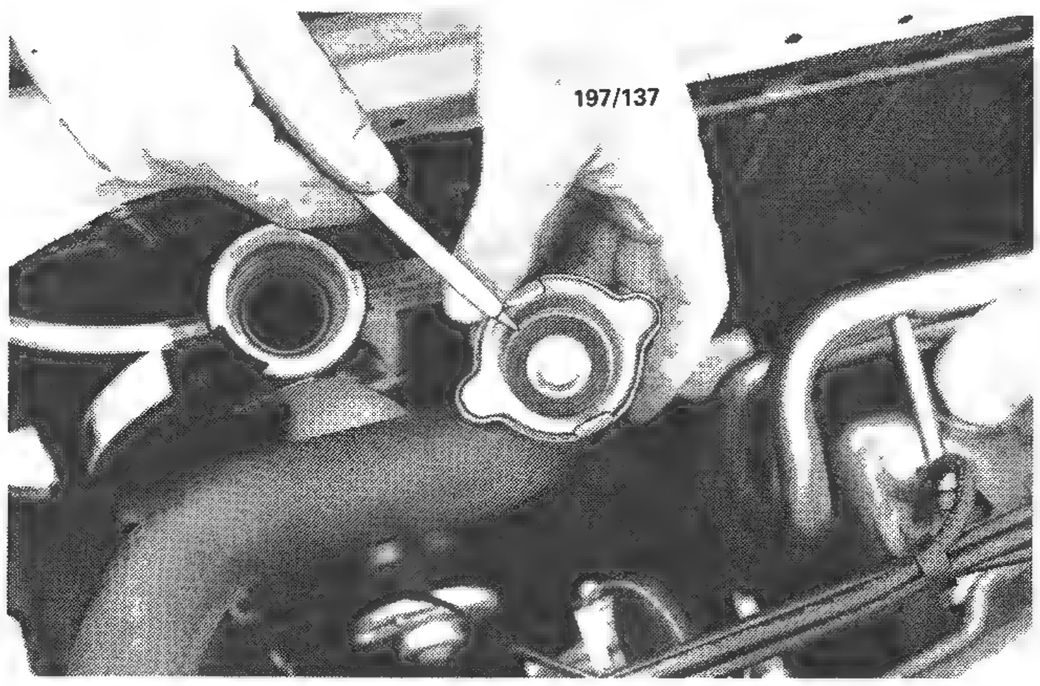

Renew the radiator pressure cap if the sealing quality of the sealing rubber is suspect.

COOLANT CIRCULATION FAULTY

(1) Partial blockage of radiator core tubes: Reverse flush or renew radiator core.

(2) Water sludge deposits in engine water jackets: Clean and flush engine water jackets and add new corrosion inhibitor to coolant.

(3) Drive belt broken or slipping: Renew or adjust drive belt.

(4) Faulty water pump: Overhaul water pump.

(5) Faulty thermostat: Renew thermostat.

(6) Insufficient coolant in system: Replenish coolant and check for leaks.

NOTE: This condition is best checked out by removing radiator cap and running engine to check for water turbulance in radiator. A normal system should show turbulance at part throttle when the engine is at operating temperature.

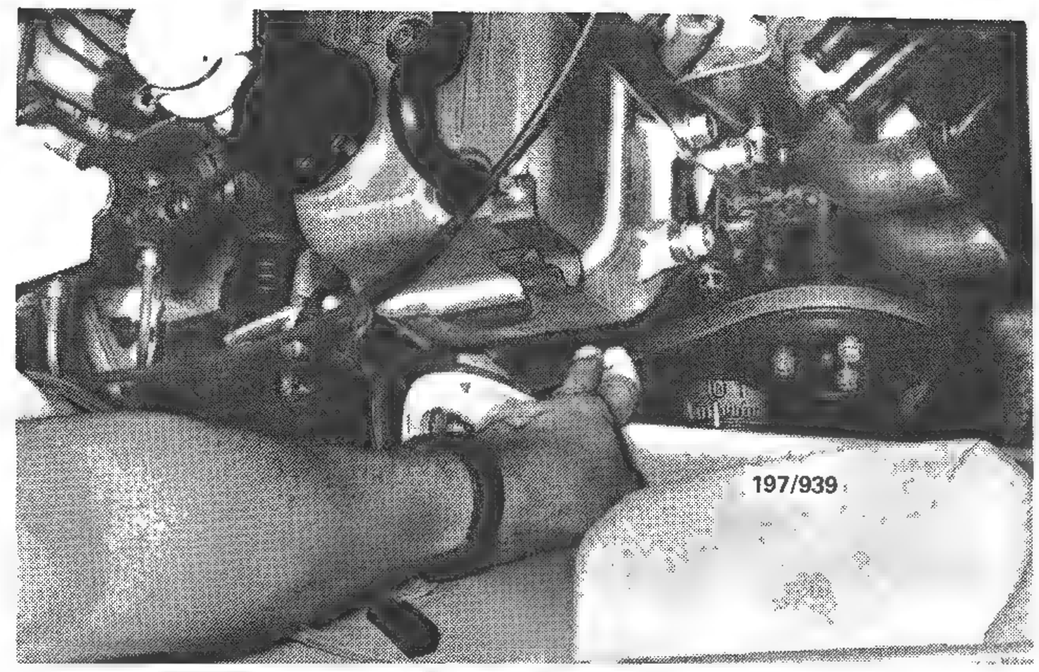

Check for loose or broken water pump drive belt.

2. DESCRIPTION

The cooling system is of the thermo-syphon type with fan and water pump assistance. Provision for pressure and vacuum relief of the system is incorporated in the radiator filler cap. The operating temperature of the cooling system is controlled by a wax pellet type thermostat which is located in the cylinder head. An anti corrosive inhibitor should always be added to the coolant to protect the engine from corrosion.

The water pump is driven by the crankshaft pulley via a V belt which also drives the alternator.

The fan is driven by a fan motor actuated by a thermo switch located in the thermostat housing cover.

On vehicles fitted with automatic transmission the lower radiator tank houses the transmission oil cooler pipes.

3. RADIATOR

NOTE: To avoid scalding, use caution when releasing the radiator cap on an engine which is running or at normal operating temperature. Switch off the engine and allow the engine to cool. Turn the cap anti-clockwise to the first stop and allow any pressure in the system to purge. Use a cloth when turning the cap past the stop and removing the cap from the radiator.

TO DRAIN AND REFILL

(1) Remove the radiator cap.

(2) Position a suitable drain tin below the radiator drain plug and remove the drain plug.

(3) Slide the heater control lever to the 'hot' position and drain the cooling system completely.

(4) Instal the radiator drain plug, do not over tighten.

(5) Fill the system with a mixture of clean water and corrosion inhibitor using the correct quantity and procedure in the manufacturer's instructions.

(6) With the radiator cap removed, start the engine and slowly add additional coolant as required.

(7) Fit the radiator cap and allow the engine to reach normal operating temperature and the thermostat to open. Check for water leaks.

NOTE: As the thermostat opens, hot water is allowed to flow from the engine to the radiator via the top radiator hose thus increasing the temperature of the top hose and the top of the radiator.

(8) Switch off the engine and after the engine has cooled down check the coolant level once more.

TO REMOVE

WARNING: The removal of the radiator is best done when the coolant is in a cool or cold state and there is no pressure in the radiator to prevent scalding.

(1) Raise the engine bonnet and fit covers to both front fenders.

(2) Drain the radiator as previously described.

(3) Disconnect the top radiator hose from the radiator.

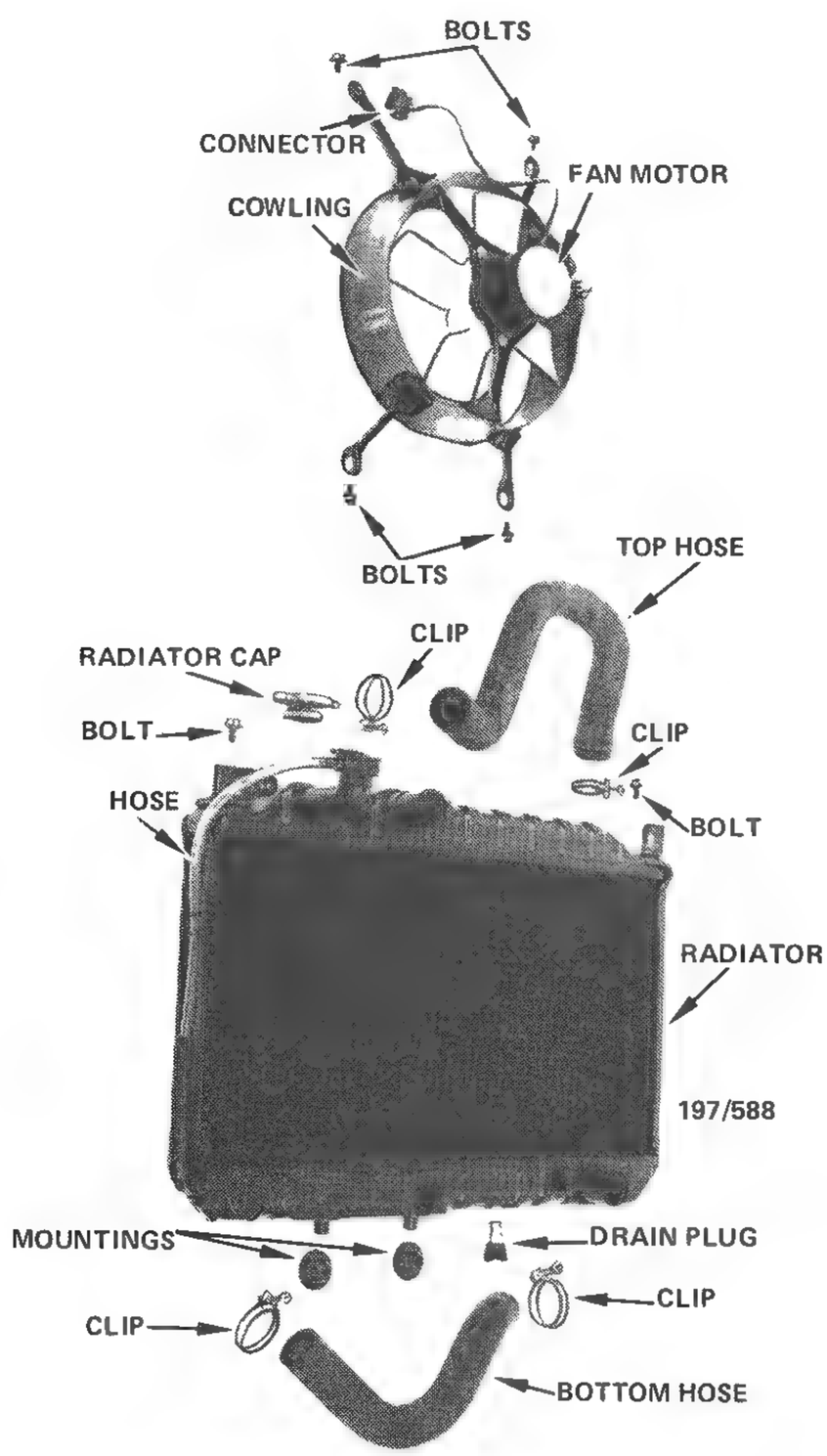

View of radiator and associated components removed from the vehicle.

(4) Disconnect the fan motor wiring at the wire connector.

(5) Disconnect the bottom radiator hose from the radiator.

(6) Remove the bolts that retain the fan motor and fan cowling assembly to the radiator and remove the fan assembly from the vehicle.

(7) On vehicles fitted with automatic transmission remove the oil cooler pipes from the radiator. Plug the end of the pipes and unions to prevent entry of dirt and spillage.

NOTE: It may be necessary to remove the splash guards to gain access to the pipes.

(8) Remove the bolts that retain the radiator to the vehicle frame and lift the radiator up and out of the vehicle.

NOTE: The lower section of the radiator is retained to the crossmembers by two rubber dowels.

(9) Securely plug the water outlets in the upper and lower radiator tanks and fill the radiator assembly with clean water.

NOTE: When a radiator that has been in use for some time is removed from the vehicle to enable repairs to be carried out to the engine, it should not be allowed to stand empty for any length of time. The radiator should be immersed in a tank of fresh water or otherwise kept full. Failure to observe this precaution may result in overheating when the engine is put back into service. This is caused by internal deposits in the radiator drying and flaking, and so obstructing the circulation of the coolant in the system.

TO FLUSH AND CLEAN

(1) Remove the radiator as previously described.

(2) Apply a water hose to the radiator outlet and reverse flush the radiator until the water flowing from it is clean.

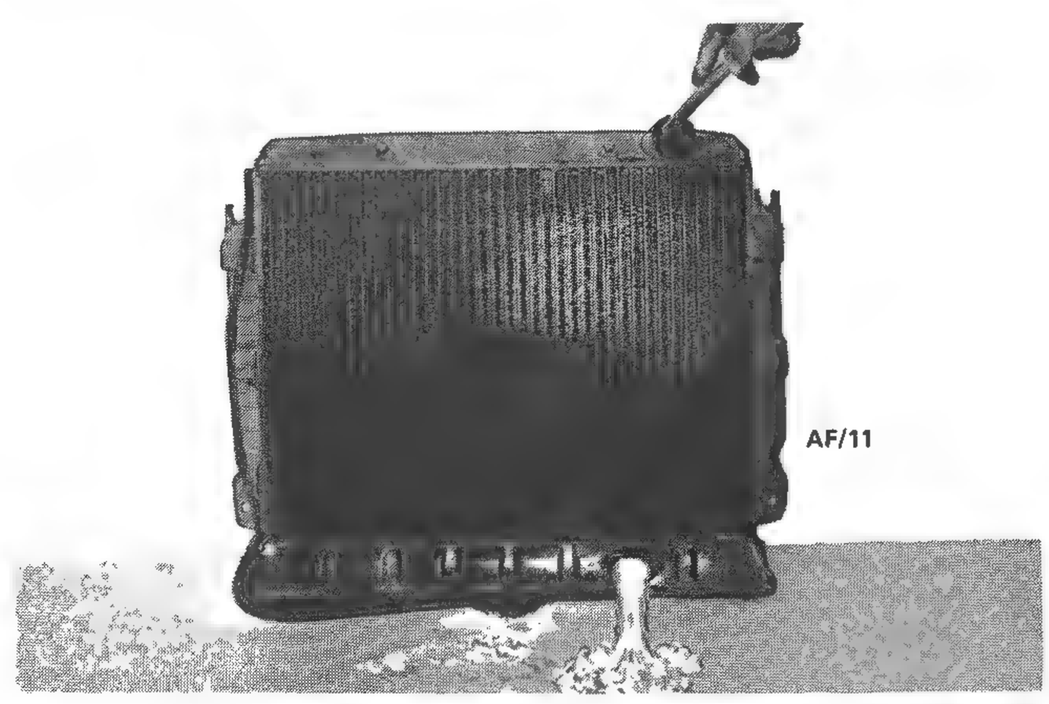

Reverse flush the radiator using water pressure.

(3) Stand the radiator upright and apply a stream of water or compressed air to the radiator core from rear to front. Maintain the procedure until all dirt and foreign matter is removed from the radiator core.

TO INSTAL

Installation is a reversal of the removal procedure with attention to the following points:

(1) Position the radiator assembly in the vehicle, whilst checking that the two rubber lower mounting dowels are positioned correctly in the crossmember. Instal the radiator retaining bolts, and the insulators where fitted, and secure the bolts.

(2) Instal the fan motor and fan cowling assembly, tighten the retaining bolts.

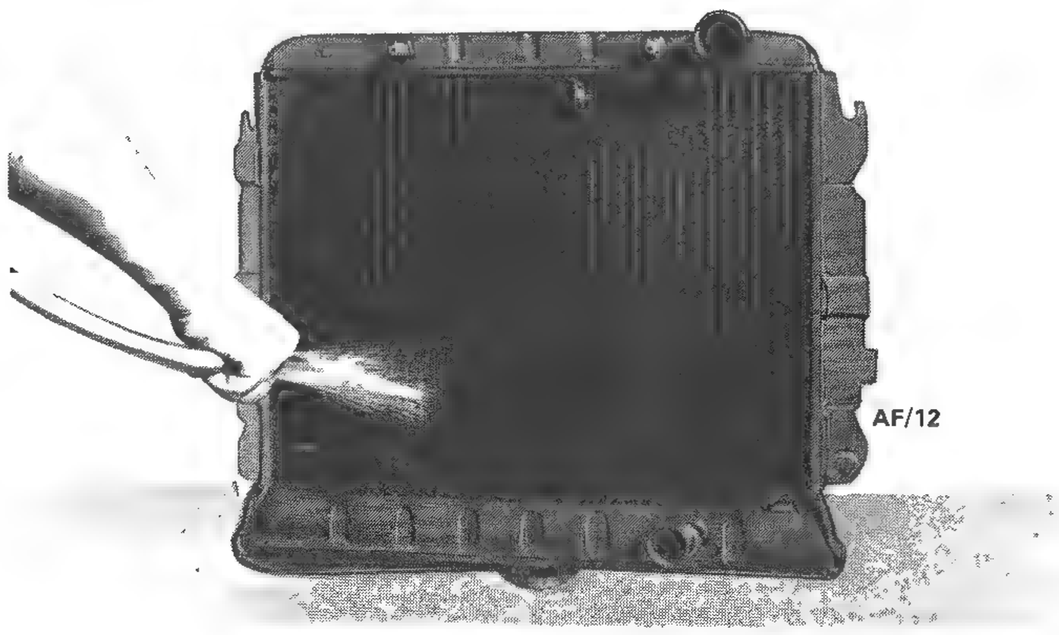

Clean obstruction from radiator core using water pressure.

(3) Remove the plugs from the automatic transmission oil cooler pipes and unions. Reconnect the pipes and, if removed, instal the splash guards.

(4) Reconnect the fan motor wire to the connector.

NOTE: Inspect all hoses for cracking or perishing and renew if unserviceable.

(5) Refit the top, bottom and overflow hoses and tighten the hose clips securely.

(6) Ensure the radiator drain plug is installed and secure.

(7) Connect the battery earth lead.

(8) Refill the cooling system as previously described, start and run the engine and check for coolant leaks.

(9) On automatic transmission models check the fluid level of the transmission and check for leaks.

4. THERMOSTAT

Special Equipment Required:
To Check – Thermometer

TO REMOVE

(1) Drain the cooling system as previously described under the Radiator heading.

(2) Disconnect the top radiator hose from the thermostat housing cover.

(3) Remove the wire from the fan motor thermo switch on the thermostat housing cover.

(4) Remove the bolts securing the thermostat housing cover to the thermostat housing.

(5) Remove the thermostat housing cover and gasket then withdraw the thermostat from the recess in the thermostat housing.

TO TEST

NOTE: A visual examination of thermostat will often determine its serviceability and obviate the necessity for further testing. For instance a thermostat with its valve fully open when removed from a cold engine is obviously faulty and should be discarded and a new unit fitted.

(1) Check that the thermostat is closed when it is cold.

(2) Suspend and immerse the thermostat together with a reliable thermometer in a vessel of cold water, ensuring that neither the thermostat nor the thermometer is touching the bottom or sides of the vessel.

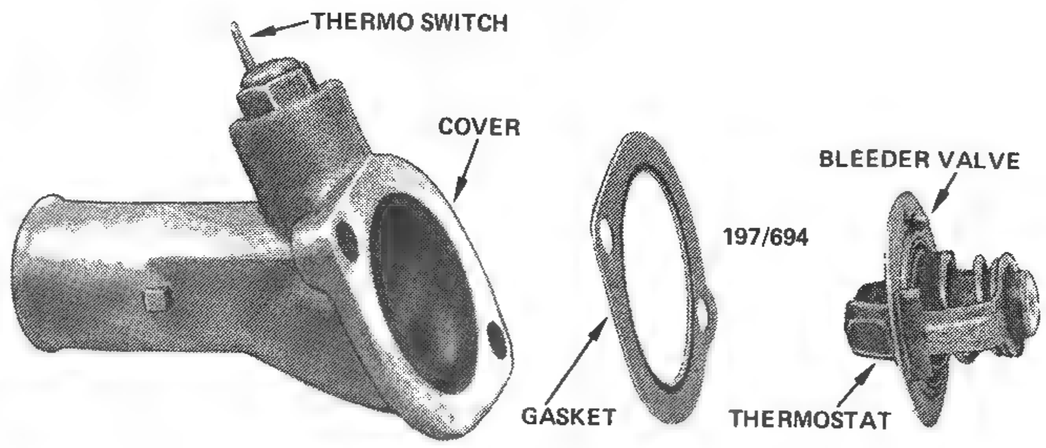

View of thermostat and components.

(3) Progressively heat the water, noting the temperature reading on the thermometer as the thermostat valve starts to open.

(4) Continue heating the water until the valve is completely open and then measure the lift of the thermostat valve.

See Specifications for the valve lift measurement and valve opening temperature.

A thermostat with opening temperatures and valve lift not within Specifications should be renewed.

TO INSTAL

Installation is a reversal of the removal procedure with attention to the following points:

(1) Instal the thermostat with the bleeder valve uppermost.

(2) Ensure that all gasket faces are clean and free from any traces of the old gasket.

(3) Use a new gasket and instal the side with the green colored sealant ring towards the cylinder head.

(4) Refill the cooling system with coolant as previously described and check for coolant leaks.

5. WATER PUMP

Special Equipment Required:
To Dismantle – Press and press plates, puller
To Assemble – Press and press plates

TO REMOVE

NOTE: Before removal of the water pump a visual inspection will determine the coolant leakage points. Coolant leaking from the hole located in the water pump body indicates a defective seal and necessitates the overhaul of the water pump.

After removing the drive belt, bearing failure can readily be tested by rocking the water pump pulley in and out. Any excessive movement indicates a badly worn bearing. Bearing noise can also be tested by spinning the water pump pulley by hand. To rectify bearing failure the water pump will have to be overhauled.

(1) Drain the cooling system as previously described.

(2) Loosen the alternator adjusting and mounting bolts, move the alternator towards the engine and remove the drive belt.

(3) Raise the front of the vehicle and support on chassis stands.

(4) Remove the splash guards from the underside of the vehicle.

(5) Working beneath the vehicle loosen the bottom radiator hose clips and remove the bottom radiator hose.

(6) Disconnect the by-pass pipe hose from the water pump.

(7) Remove the retaining bolts and nut that retain the water pump to the cylinder block.

(8) Remove the water pump and gasket from the cylinder block. Discard the gasket.

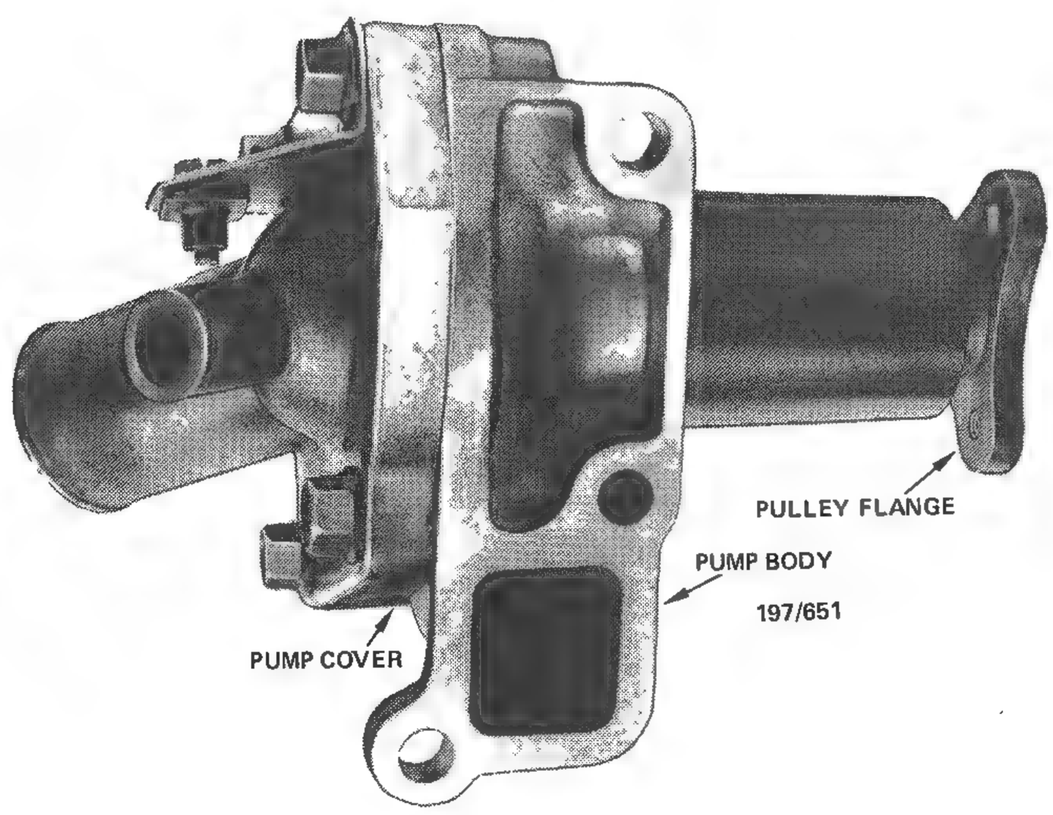

View of assembled water pump.

TO DISMANTLE

(1) Remove the bolts retaining the water pump drive pulley to the water pump flange. Remove the pulley.

(2) Remove the bolts retaining the water pump cover to the water pump body. Remove the cover and the gasket. Discard the gasket.

(3) Place the water pump body in a suitable press with the press plates positioned under the water pump pulley flange.

(4) Press the shaft out of the water pump flange. Ensure that the water pump does not fall when the shaft is separated from the flange.

(5) Using a suitable grinder, grind off the end of the impeller head to bare the end of the bearing shaft.

(6) Using a suitable puller, remove the impeller and the seal from the bearing shaft.

(7) Support the front of the pump body on a suitable sleeve and press the bearing and shaft assembly out towards the front of the pump body.

(8) Remove the water seal from the pump body.

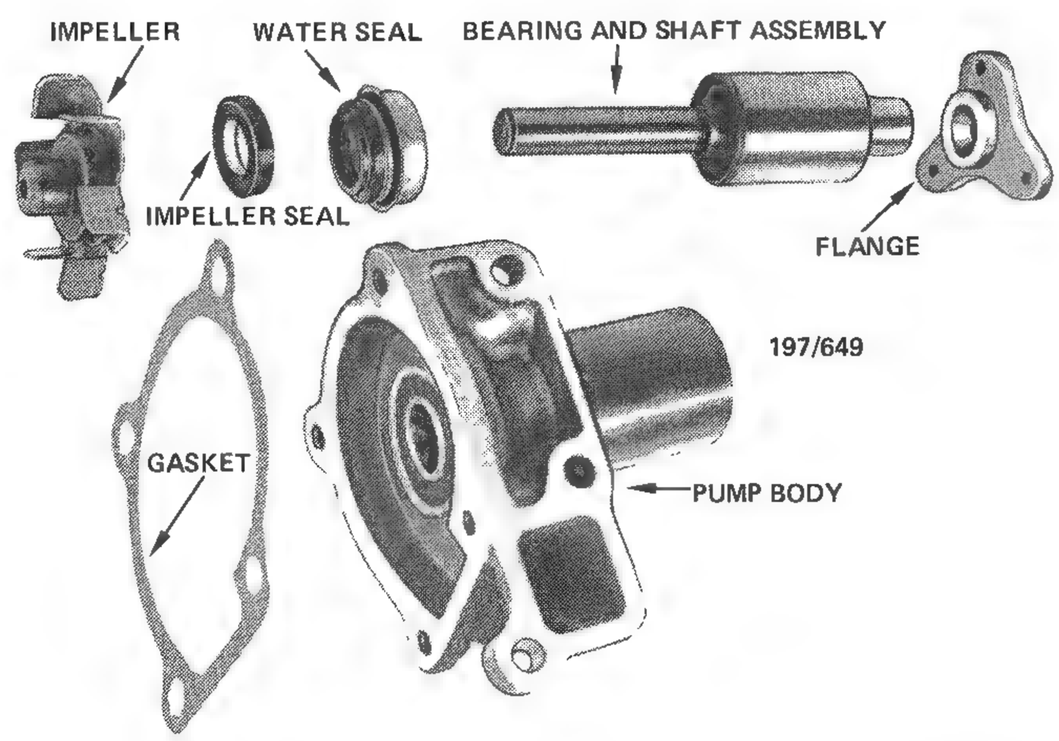

View of dismantled water pump body and components.

TO CLEAN AND INSPECT

(1) Wash the water pump body and remove all traces of the old gasket.

(2) Check the pump body for distortion, cracks or corrosion, if any of these faults are apparent the water pump assembly must be renewed.

(3) Check that the water drain hole in the pump body is clear.

TO ASSEMBLE

(1) Press the new bearing and shaft assembly into the water pump body from the front of the water pump.

NOTE: Using a suitable sleeve, press on the outer race of the bearing only and press the bearing and shaft assembly into the pump body until the end of the bearing outer race is flush with the bottom of the bevel in the pump body bore.

(2) Instal the pulley flange to the bearing shaft with the plain face of the pulley flange uppermost. Support the pump on the rear end of the bearing shaft and press the pulley flange onto the bearing shaft until the end of the bearing shaft protrudes 4 mm.

(3) Instal the water seal into the pump body. Using a suitable sleeve press the seal squarely into its recess with its sealing surface up and pressing on the metal lip only.

(4) Smear a small amount of engine oil on the sealing surface of the water seal.

(5) Instal the ceramic washer inside the impeller seal and instal the assembly inside the impeller with the ceramic washer towards the outside of the impeller.

(6) Support the water pump on the front end of the bearing shaft and instal the impeller and seal assembly.

(7) Press down the impeller boss until the impeller bottoms on the bearing shaft.

NOTE: Do not apply pressure to the impeller past the point where it bottoms as this will damage the impeller. Do not apply pressure to the centre of the impeller, doing so will block the air escape hole in the centre of the impeller and cause the impeller to crack.

(8) Instal the pump cover to the pump body using a new gasket coated both sides with a suitable gasket cement.

(9) Instal the water pump pulley to the water pump pulley flange and secure the retaining bolts.

TO INSTAL

Installation is a reversal of the removal procedure with attention to the following points:

(1) Ensure that all mating faces are clean and free from any traces of the old gasket.

(2) Use a new gasket coated both sides with a suitable gasket cement.

(3) Ensure that the drive belt is correctly fitted and adjusted as described later in this section.

(4) Ensure that all hoses are correctly fitted and the hose clips secured.

(5) Refill the cooling system as previously described and check for coolant leaks.

6. WELCH PLUGS

To facilitate the casting of the cylinder block and cylinder head passages and water jackets, a number of openings had to be made at manufacture.

These openings are plugged with welch plugs. The welch plugs will have to be renewed when cleaning the engine water jackets or when the plugs become defective due to corrosion.

TO RENEW

NOTE: If a welch plug is found to be defective, it is good policy to renew all welch plugs.

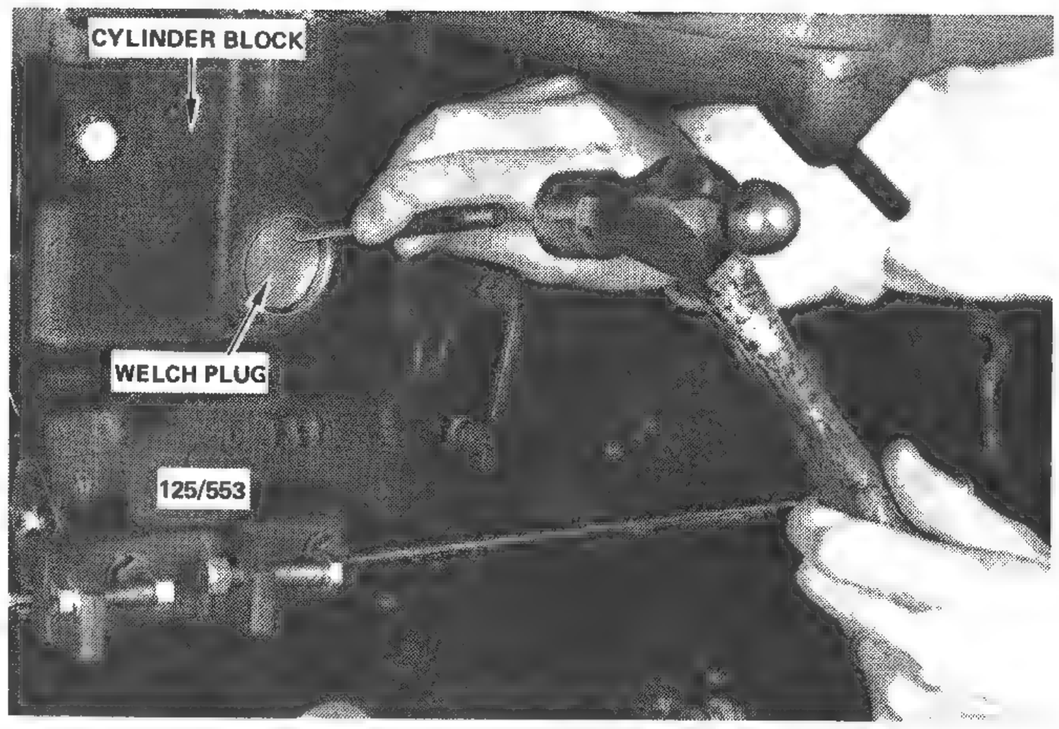

Tap the welch plug on its outer circumference into cylinder block. Typical.

(1) Drain the cooling system as previously described.

(2) Remove the necessary engine components or accessories to gain ample working space around the damaged plug.

(3) Using a suitable punch and hammer tap the welch plug on its outer circumference into its opening.

(4) Grasp the edge of the welch plug with a pair of multigrip pliers and using the shoulder of the multigrip pliers as a fulcrum, lever the plug out of its opening.

(5) Thoroughly clean and dry the welch plug opening.

(6) Lightly smear the edge of a new welch plug and the opening with 'Stag' jointing compound.

(7) Place the new welch plug onto the opening and using a piece of tubing or socket equal in size to the rim of the welch plug, drive the welch plug squarely into its opening.

NOTE: The welch plug must be driven straight and squarely into its opening otherwise leaks may occur.

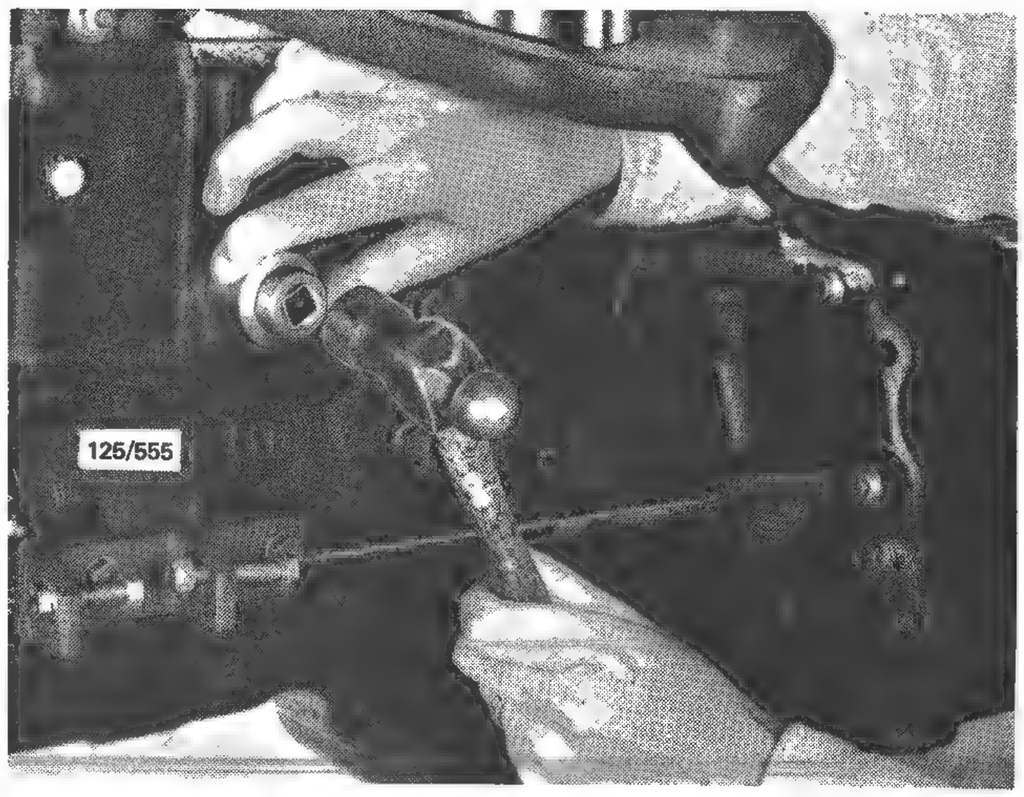

Using correct fitting tube or socket, drive welch plug into its opening. Typical.

(8) Instal the components which were removed to gain access to the welch plug.

(9) Fill the cooling system as previously described. With the radiator cap installed run the engine until it reaches normal operating temperature and check for coolant leaks.

7. DRIVE BELT

TO RENEW

(1) Loosen the alternator mounting bolt.

(2) Loosen the alternator adjusting bracket bolt.

(3) Push the alternator as far as possible towards the cylinder block assembly.

(4) Slip the old belt off the alternator pulley and then manoeuvre it off the water pump and crankshaft pulleys and remove it from the engine.

(5) Manoeuvre the new belt over the crankshaft and water pump pulleys and run it onto the alternator pulley.

(6) Adjust the drive belt tension as described later in this section and securely tighten all bolts.

TO ADJUST

(1) Loosen the alternator mounting bolt.

(2) Loosen the alternator adjusting bracket bolt.

(3) Pull the alternator away from the cylinder block sufficiently to give the belt enough tension to prevent it slipping on the pulleys.

NOTE: Do not overtighten the drive belt. An overtightened belt will cause rapid wear in the water pump and alternator bearings. The drive belt will have sufficient tension when it can be flexed 12–14 mm with finger and thumb pressure between the alternator and water pump pulleys.

(4) Hold the alternator in this position and securely tighten the adjusting bracket and mounting bracket bolts.

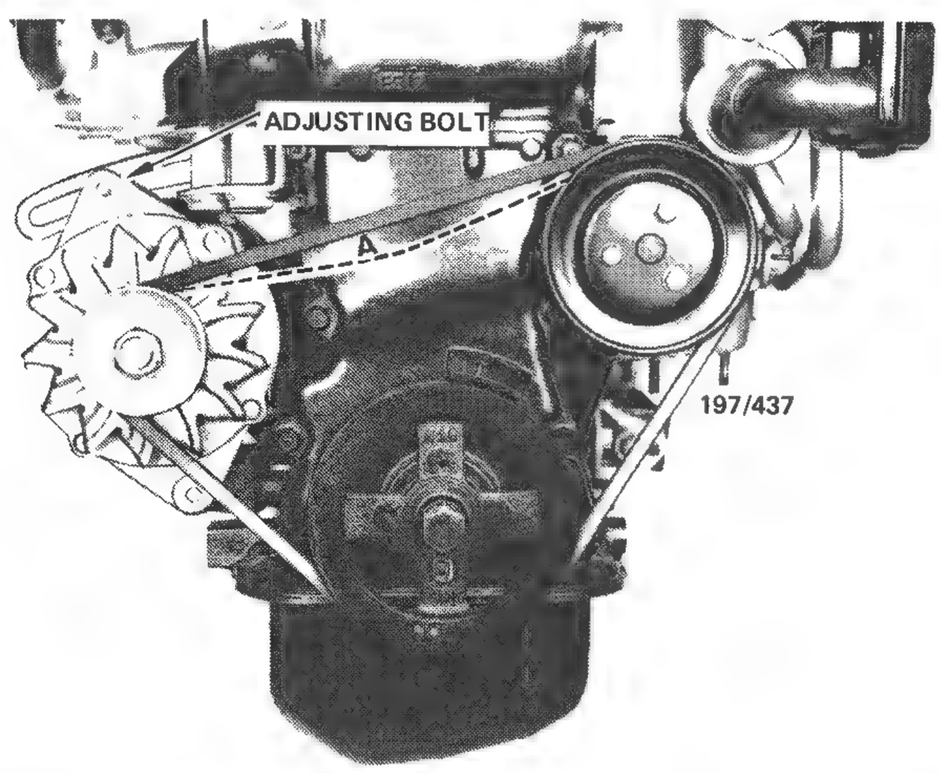

The drive belt should be adjusted so that there is a deflection of 12–14 mm at point A.

8. HEATER UNIT AND CONTROLS

HEATER UNIT

To Remove and Instal

(1) Raise the engine bonnet and fit fender covers to both front fenders.

(2) Disconnect the battery negative lead.

(3) Slide the heater temperature control lever to the 'hot' position.

(4) Remove the radiator drain plug and drain the cooling system.

(5) Remove the centre console from the vehicle as described in the Body section.

(6) Remove the steering column from the vehicle as described in the Steering section.

(7) Remove the instrument cluster from the vehicle as described in the Electrical section.

(8) Remove the radio control knobs and remove the retaining nuts and washers from the radio control shafts.

(9) Loosen the small grub screw that retains the choke cable knob to the choke cable and remove the choke cable knob. Remove the choke cable assembly retaining nut.

(10) Remove the screws that retain the radio panel to the instrument panel.

(11) Carefully prise the top lip of the radio panel down and outwards, then starting at the left hand side, prise the radio panel off the instrument panel.

(12) Remove the clock retaining screws, disconnect the clock wire at the connector and remove the clock from the instrument panel.

(13) Working inside the engine compartment disconnect the bonnet release cable from the bonnet lock. Tape the bonnet lock to prevent accidental closure of the bonnet.

(14) Loosen the heater unit inlet and outlet water hose clips and remove the water hoses from the heater unit inlet and outlet tubes.

(15) Working inside the vehicle, pull the bonnet release cable assembly into the cabin through the bulkhead taking care not to damage the bonnet release cable grommet as it is pulled through.

(16) Remove the radio retaining screws at the front of the radio and the retaining screw at the rear. Disconnect the radio wires at the connectors and disconnect the aerial at the rear of the radio. Withdraw the radio from the instrument panel.

(17) Remove the screws that retain the fuse box to the instrument panel and swing the fuse box out of the way.

(18) Where applicable, remove the parcel tray retaining screws and remove the parcel tray from the vehicle.

(19) Remove the heater control unit retaining nuts retaining the heater control unit to the instrument panel.

(20) Disconnect the cigarette lighter wire at the wire connector.

(21) Disconnect the side defroster ducts from the defroster nozzles.

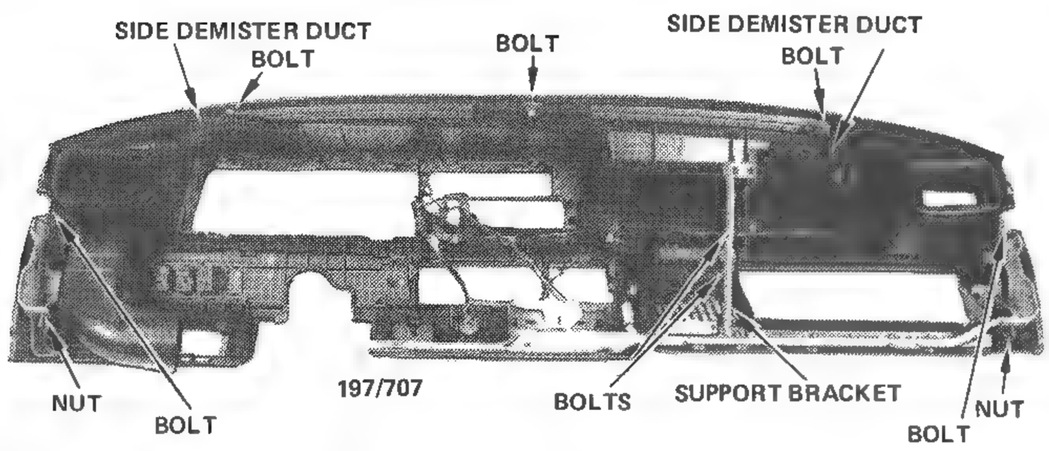

Rear view of instrument panel showing the location of the mounting bolts and nuts.

(22) Disconnect the ventilator ducts from the heater unit.

(23) Remove the instrument panel retaining bolts near the heater core and the retaining nuts at the right and left hand lower side.

(24) Remove the dress caps from the top three instrument panel retaining bolts, one in between the demister duct outlets and one at the outer end of each demister duct.

(25) Remove the dress caps from the instrument panel far left and far right hand side retaining bolts. Remove the retaining bolts.

(26) Remove the retaining bolts from the instrument panel support bracket.

(27) Squarely withdraw the instrument panel from its mounted position a short distance, and disconnect the instrument and switch wire connectors, taking note of their fitted positions.

(28) Remove the instrument panel from the vehicle.

(29) Remove the clips that retain the defroster hoses to the heater unit and remove the defroster hoses.

(30) Remove the boost ventilation duct from the heater unit.

(31) Remove the air duct connector piece from between the heater unit and the rear duct, where fitted, by pulling it outwards in a straight line.

(32) Disconnect all control cables from the heater unit.

NOTE: All control cables are color coded, take note of their fitted positions to ensure correct assembly.

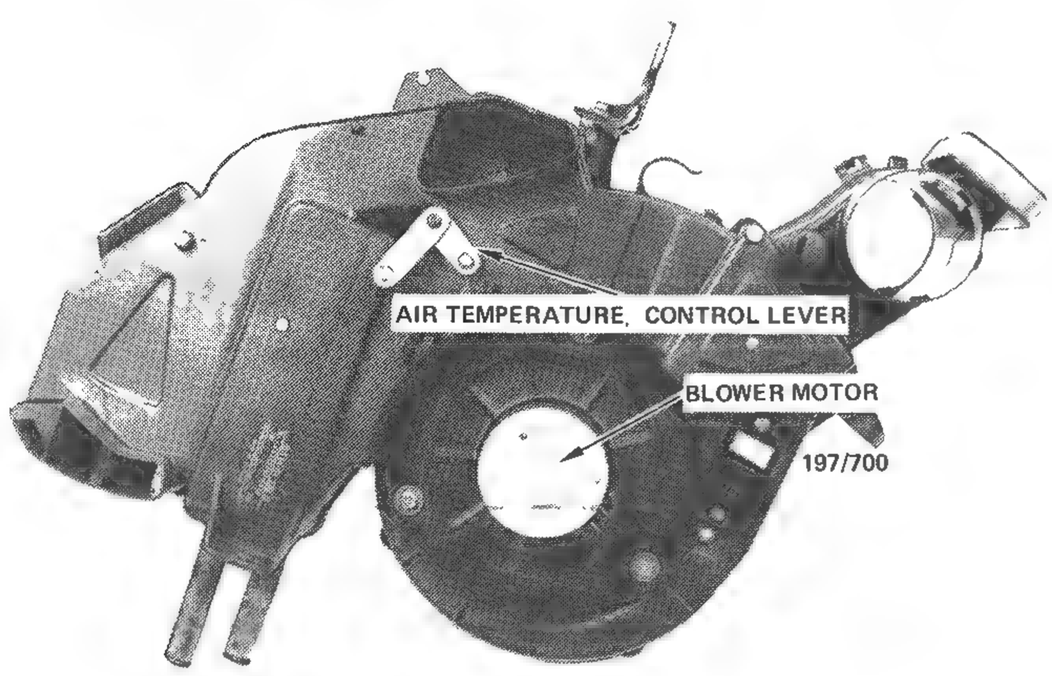

Right hand side view of heater unit.

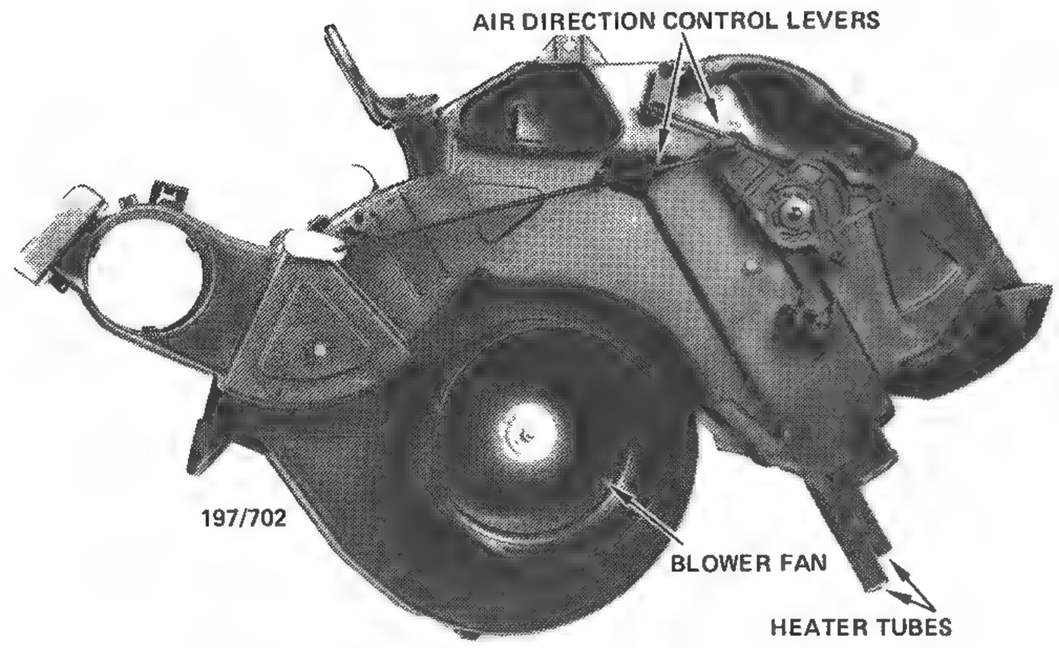

Left hand side view of heater unit.

(33) Remove the two retaining bolts and the one retaining nut that retain the heater unit to the bulk head. Disconnect the blower motor wires and the heater coil wires at the terminals.

(34) Remove the heater unit from the vehicle.

Installation is a reversal of the removal procedure with attention to the following points:

(1) Manoeuvre the instrument panel into the vehicle and instal the retaining bolts and nuts loosely.

(2) Before tightening the retaining bolts and nuts inspect that wire connectors and wires are not interfering with any body panels and are not pinched in between any components.

(3) As each control cable is connected to its respective lever on the heater unit, ensure that the control levers and the cables move freely without binding and that the control levers do not foul on either end of the slots in the heater control unit before the valve it operates is either fully open or closed.

(4) Instal the heater water hoses and secure the hose clips.

(5) Instal the radiator drain plug and refill the radiator as previously described.

HEATER CONTROLS

To Remove and Instal

(1) Disconnect the battery earth lead.

(2) Mark the position of the heater control valve cable and remove the cable from the heater control valve.

(3) Remove the heater control lever knobs by

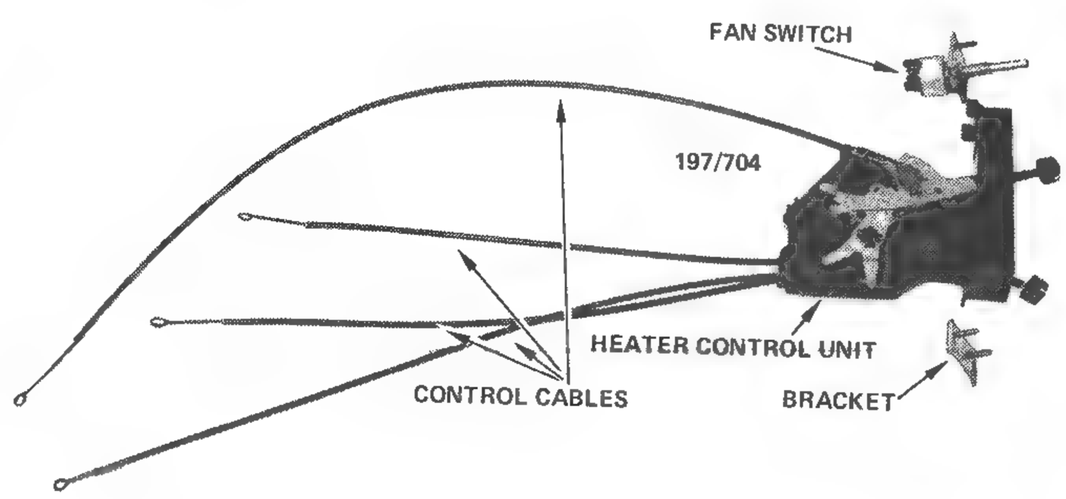

View of heater control unit and cables.

loosening the small grub screw beneath the knobs and withdraw the heater fan switch knob.

(4) Remove the instrument cluster hood as described under the Instrument Cluster heading in the Electrical section.

(5) Remove the glove box lid striker plate retaining screws and remove the striker plate.

(6) Remove the glove box assembly retaining screws and remove the glove box assembly from the instrument panel.

NOTE: Mark and note the position of each control cable as it is removed from each corresponding lever.

(7) Working on the right hand side of the heater unit, disconnect the yellow coded air temperature control cable from the heater unit by opening the retaining clip and sliding the end of the inner cable off the lever pin.

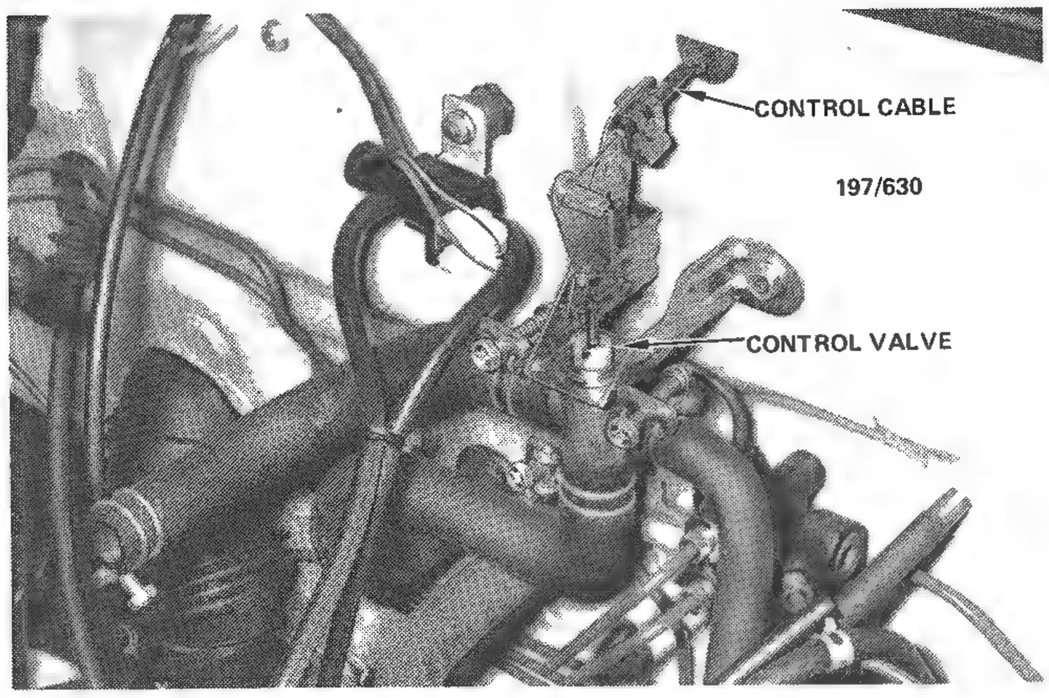

Installed view of heater control valve.

(8) Working on the left hand side of the heater unit, disconnect the green coded control cable from the heater unit air direction flap lever by opening the retaining clip and sliding the end of the inner cable off the lever pin.

(9) Working on the left hand side of the bulkhead disconnect the white coded control cable from the fresh air recirculation box by opening the retaining clip and sliding the end of the inner cable off the lever pin.

(10) Remove the four screws that retain the heater control unit to the instrument panel.

(11) Remove the heater control unit and control cables from the instrument panel a short distance then disconnect the illumination lamp socket from the heater control unit.

(12) Remove the heater control unit and cables from the vehicle.

Installation is a reversal of the removal procedure with attention to the following points:

(1) When installing the heater control unit to the instrument panel, ensure to instal the illumination lamp socket before fully installing the heater control unit.

(2) As each control cable is connected to its respective lever on the heater unit and control valve, ensure that the control levers and cables move freely without binding and that the control levers do not foul on either end of the slots in the heater control unit before the valve it operates is either fully open or closed.

Refer to supplement for more information

FUEL SYSTEM

SPECIFICATIONS

CARBURETTOR

Make ..... Hitachi
Type ..... Twin throat downdraught
Venturi diameter:
Primary ..... 23 × 8 mm
Secondary ..... 27 × 13 × 7 mm

Throat diameter:
Primary ..... 26 mm
Secondary ..... 30 mm

Main jet:
Primary ..... # 110
Secondary ..... # 160

Slow jet:
Primary ..... # 48
Secondary ..... # 160

FUEL PUMP

Type ..... Mechanical diaphragm
Delivery pressure ..... 19.5–26.5 kPa
Delivery capacity ..... 800 cc/min at idle

FUEL FILTER

Type ..... Disposable

AIR CLEANER

Type ..... Disposable paper element

1. FUEL SYSTEM TROUBLE SHOOTING

ENGINE WILL NOT START

(1) Lack of fuel in float chamber: Check fuel pump delivery, sticking needle valve or blocked fuel filter.

(2) Engine flooded with fuel when cold, by excessive use of choke or accelerator: Hold accelerator flat until engine starts and revise starting procedure.

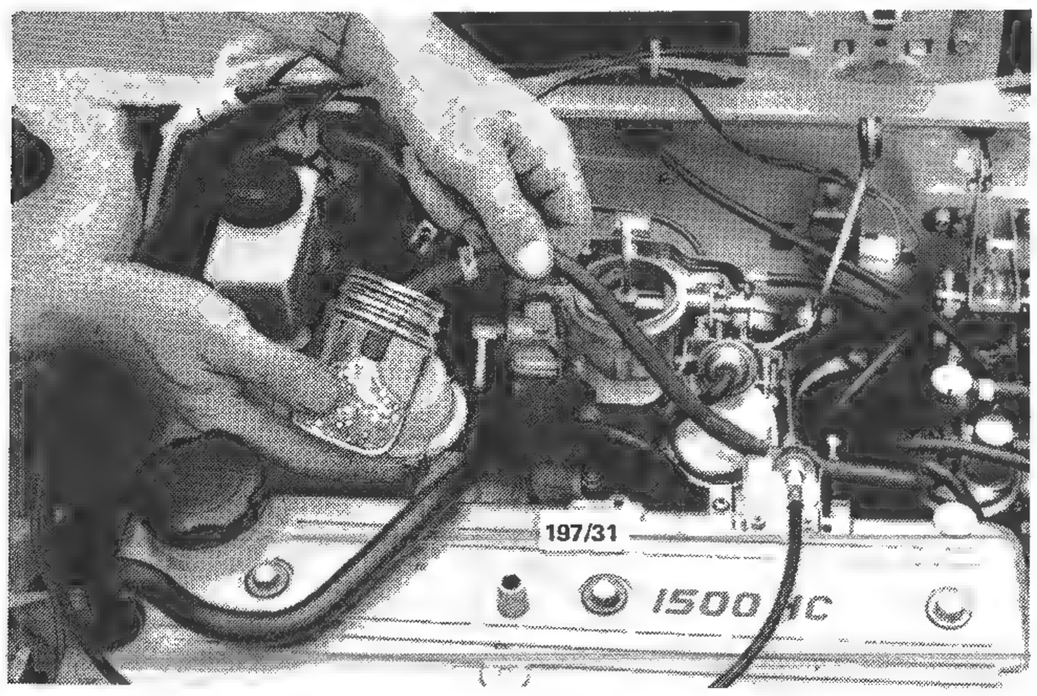

Checking for fuel flow at carburettor supply hose.

(3) Engine flooded when hot by excessive use of accelerator: Hold accelerator flat until engine starts.

NOTE: Check for fuel in float chamber by removing air cleaner and inspecting sight glass. Check faulty fuel delivery by disconnecting fuel supply hose at carburettor and cranking engine. Engine flooding is indicated by a strong petrol smell and fuel leaks at the throttle shafts.

ENGINE STALLS AT IDLE SPEED

(1) Incorrect adjustment of idling speed: Check and adjust as described in the Engine Tune-up section.

(2) Carburettor float bowl flooding: Check for sticking needle valve or punctured float. Clean out and blow out carburettor.

(3) Carburettor starving for fuel: Check fuel delivery at needle valve. Check fuel pump and fuel filter.

(4) Blocked slow jet or air bleed: Clean and blow out carburettor.

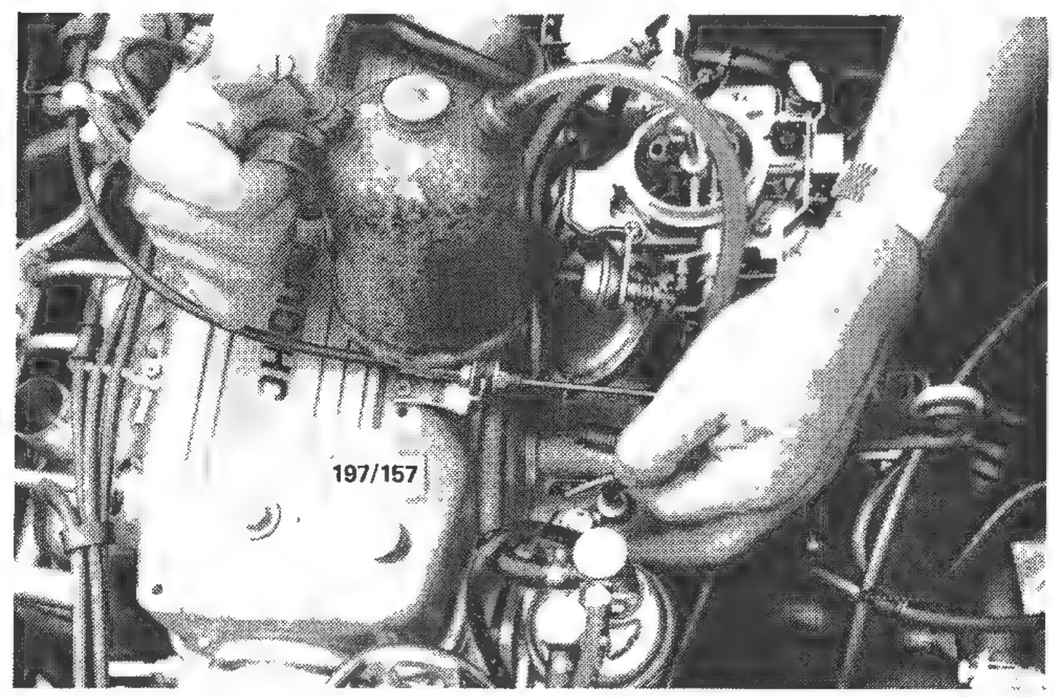

Air leaks at the inlet manifold can sometimes be located by running engine oil around the suspect joints.

(5) Carburettor to inlet manifold nuts loose: Tighten nuts and check for air leaks.

(6) Leaking carburettor or inlet manifold gaskets: Check and renew faulty gaskets.

(7) Inoperative idle cut solenoid: Check solenoid and electrical connections.

NOTE: Check out this condition by a process of elimination in the fault order given. Only remove and dismantle the carburettor as a last resort. Air leaks at the manifold can be checked out by running engine oil around the suspect joints with the engine running.

FLAT SPOT ON ACCELERATION

(1) Blocked accelerator pump discharge nozzle or sticking check valve: Clean and blow out carburettor as described under the appropriate heading.

(2) Faulty accelerator pump linkage: Check and rectify pump linkage.

(3) Faulty accelerator pump plunger cup: Renew pump plunger.

NOTE: Check out the pump circuit by removing the air cleaner and actuating the throttle lever by hand. A squirt of fuel should be seen in the carburettor throttle bore.

ENGINE MISFIRES OR CUTS OUT AT HIGH SPEED

(1) Obstruction in main or power jets: Dismantle and blow out jets.

(2) Low fuel level in float chamber or float chamber starving for fuel: Check float level setting, check fuel pump and supply lines.

(3) Failure of fuel pump to deliver sufficient fuel: Renew fuel pump.

(4) Blockage in fuel tank pipe: Remove blockage and clean pipe.

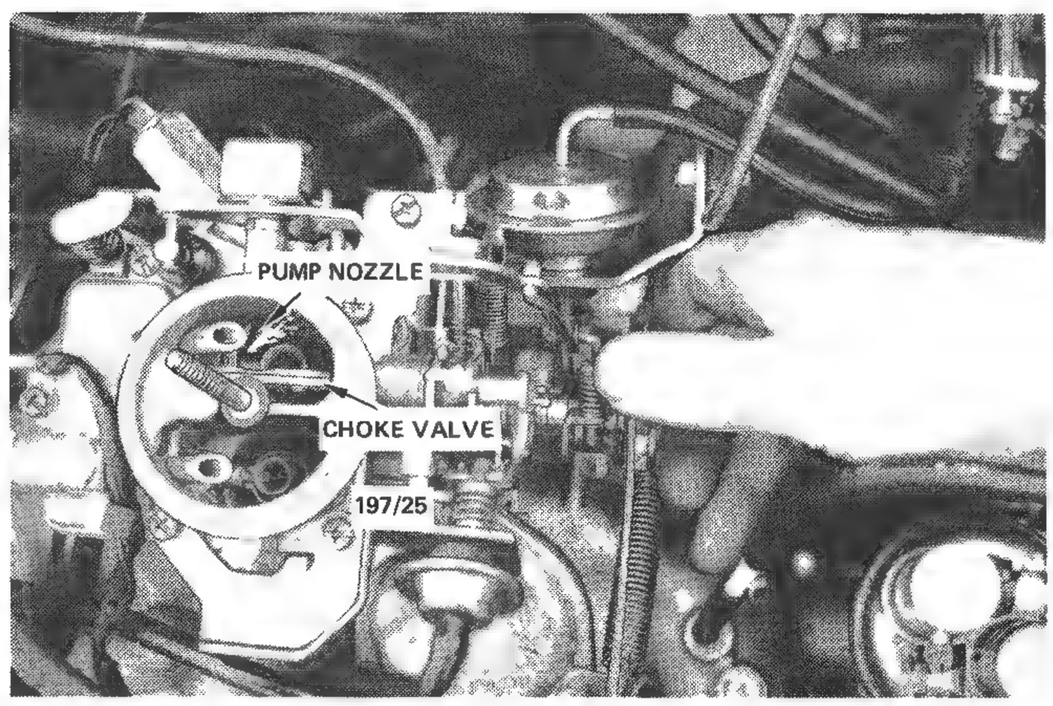

Check for discharge of fuel at carburettor accelerator pump nozzle by actuating the throttle lever by hand.

(5) Restriction in fuel filter: Instal a new fuel filter.

(6) Air leak between carburettor main body assemblies: Check and renew gaskets and tighten securing screws.

(7) Water in carburettor: Drain and clean fuel system.

NOTE: Check out possible faults by a process of elimination in the fault order given. Check out fuel pump delivery pressure and capacity as outlined in the appropriate part of this section. Check for water in float chamber and low float level by inspecting sight glass. Carburettor removal and dismantling procedure is fully outlined in this section.

EXCESSIVE FUEL CONSUMPTION

(1) Fuel level too high: Check and adjust fuel level.

(2) Choke valve partially closed: Check and rectify choke operation.

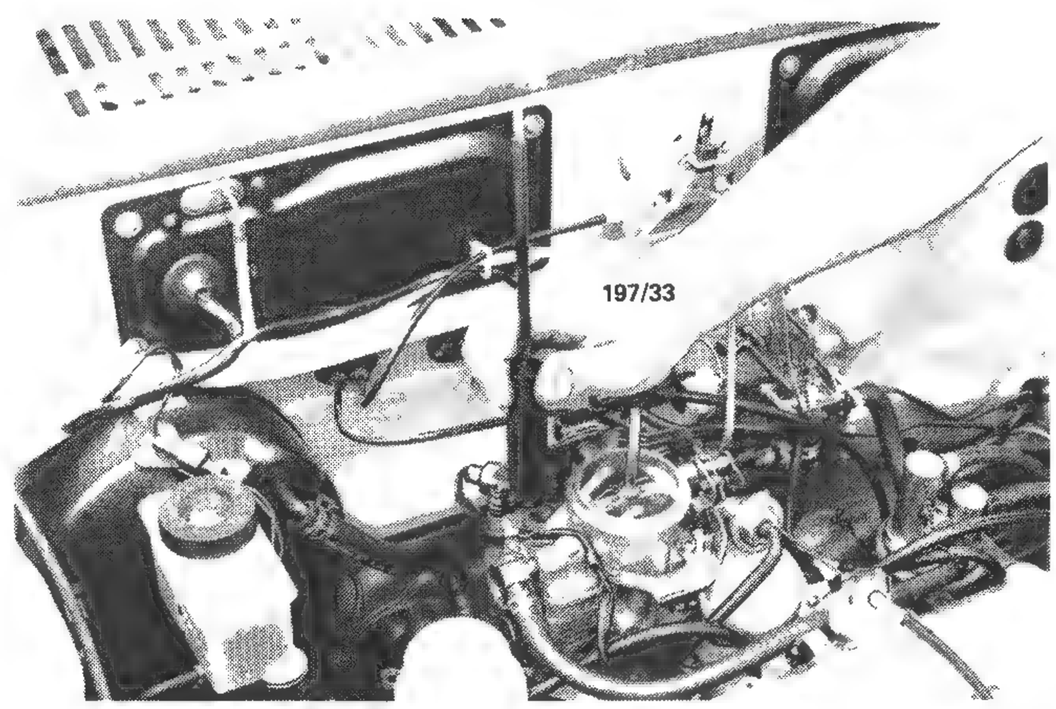

Float chamber flooding can sometimes be rectified by tapping the carburettor float chamber in the vicinity of the needle valve and seat.

(3) Air cleaner element dirty or requires renewal: Clean element or renew.

(4) Leaks between fuel pump and carburettor: Check and rectify leaks.

(5) Worn or damaged main jets: Check and renew faulty componets.

(6) Excessive use of accelerator pump: Revise driving habits.

(7) Manual choke incorrectly set: Check and adjust the choke setting.

NOTE: Most common causes for excessive fuel consumption are a blocked air cleaner element, which can be removed and checked visually, and external fuel leakage from system components which can also be checked visually. Choke setting and operation of the choke should also be held suspect as a likely trouble source.

2. AIR CLEANER

DESCRIPTION

The air cleaner assembly consists of a top cover, a paper type element, and the air cleaner main body.

The servicing of the air cleaner assembly is confined to periodical cleaning or renewal of the paper element.

An air temperature control valve is installed in the air cleaner to control the temperature of the air being drawn into the carburettor.

TO REMOVE AND INSTAL

(1) Raise the engine bonnet and fit fender covers to both front fenders.

(2) Disconnect the hot air hose from the air intake spout of the air cleaner main body.

(3) Remove the bolts securing the air cleaner assembly to the rocker cover and the nut on the side of the air cleaner.

(4) Mark and disconnect the hoses to the rocker

cover, the charcoal canister and the air injection system from the air cleaner assembly.

(5) Remove the wing nut and sealing washer from the centre of the air cleaner assembly and lift the air cleaner assembly from the carburettor.

(6) Remove the air cleaner top cover and withdraw the paper element from the main body.

Installation is a reversal of the removal procedure with attention to the following points:

(1) Check the condition of the air cleaner top cover and main body rubber seals.

(2) Instal the air cleaner element centrally to the air cleaner main body and instal the main body to the carburettor. Ensure the hot air hose is aligned with the air intake spout.

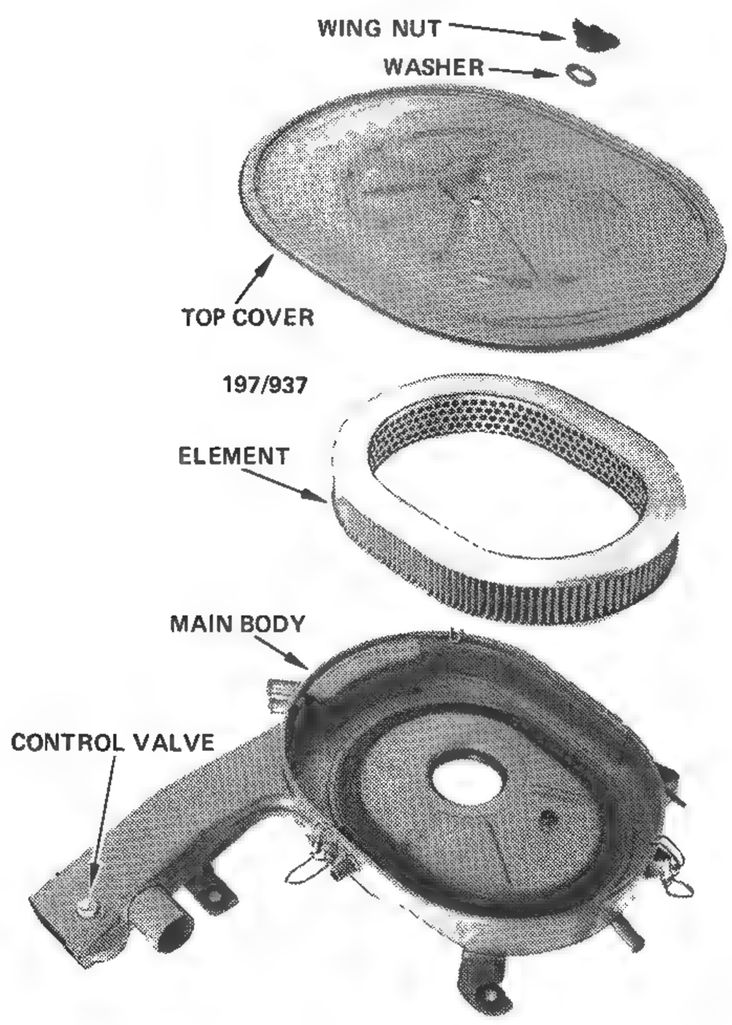

Dismantled view of air cleaner.

(3) Instal the top cover to the air cleaner body, fit the sealing washer and securely tighten the wing nut. Connect the hose from the rocker cover to the top cover of the air cleaner.

(4) Instal and securely tighten the air cleaner to rocker cover bolts. Connect the hoses from the charcoal canister and the air injection system to the air cleaner.

(5) Instal and securely tighten the nut on the side of the air cleaner.

TO TEST AIR TEMPERATURE CONTROL VALVE

(1) With a cold engine and a low ambient temperature, ensure that the bimetal valve in the air cleaner inlet duct is in the closed position (directed to the exhaust manifold and closed to the atmosphere direct).

(2) With the engine bonnet closed, run the engine until normal temperature has been reached.

(3) The bimetal valve should now be open to the atmosphere direct.

3. CARBURETTOR

DESCRIPTION

The carburettor is a twin throat downdraught type, so constructed that only the primary system is operating when the engine is running under a light load. The primary system also provides adequate mixtures for starting, when the choke is closed, and is directly activated by the accelerator cable.

The secondary throttle valve is operated by a vacuum diaphragm, which comes into operation when the primary throttle valve opens 46 degrees. Thereby unlocking the lever, permitting venturi vacuum to operate the secondary throttle valve diaphragm and opening the secondary throttle valve.

The idle mixture screw is factory adjusted and sealed and should only be adjusted by qualified personnel.

A fuel cut off solenoid valve, connected through the ignition switch, provides an instant fuel cut off when the engine is switched off thereby preventing engine 'running on'.

A mechanical operated accelerator pump provides extra fuel during acceleration by means of a plunger type accelerator pump, to prevent flat spots during acceleration.

A glass covered inspection window is built in the float chamber with a centrally located dot in the sight glass, which should correspond with the fuel level in the float chamber if the fuel level is correctly adjusted.

The choke is cable operated. When the choke valve is in the closed position the fast idle linkage and the throttle valve are slightly opened. When the engine is started, manifold vacuum overcomes the spring tension on the choke diaphragm and partially opens the choke valve. Venturi vacuum also opens the off set choke valve against spring tension.

NOTE: It is advisable to refer to the Emission Control section before commencing work on the fuel system as both sections are closely related.

TO REMOVE AND INSTAL

(1) Raise the engine bonnet and fit fender covers to both front fenders.

(2) Remove the air cleaner assembly from the vehicle as previously described under the Air Cleaner heading.

(3) Disconnect the battery earth cable from the battery.

(4) Disconnect the main fuel line from the carburettor.

(5) Disconnect the remaining hoses from the carburettor, carefully noting their position for correct assembly.

(6) Disconnect the fuel cut solenoid wire connector.

(7) Manually move the accelerator cable cam to the full throttle position. Unclip the now exposed cable end through the slot at the end of the throttle cam and

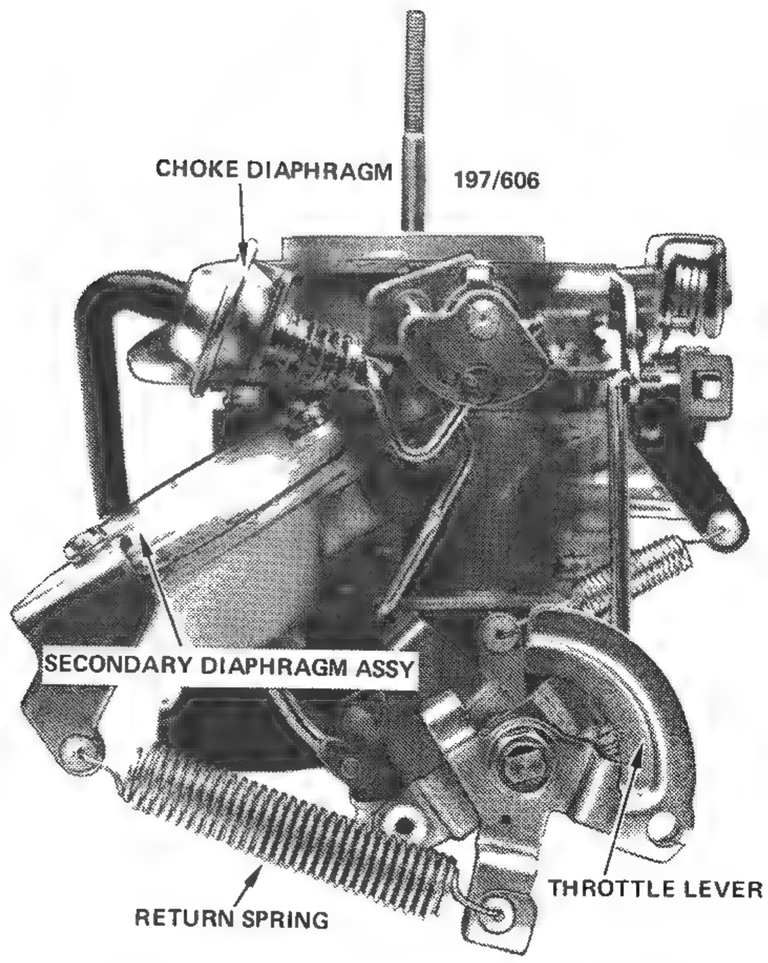

Throttle lever side view of carburettor.

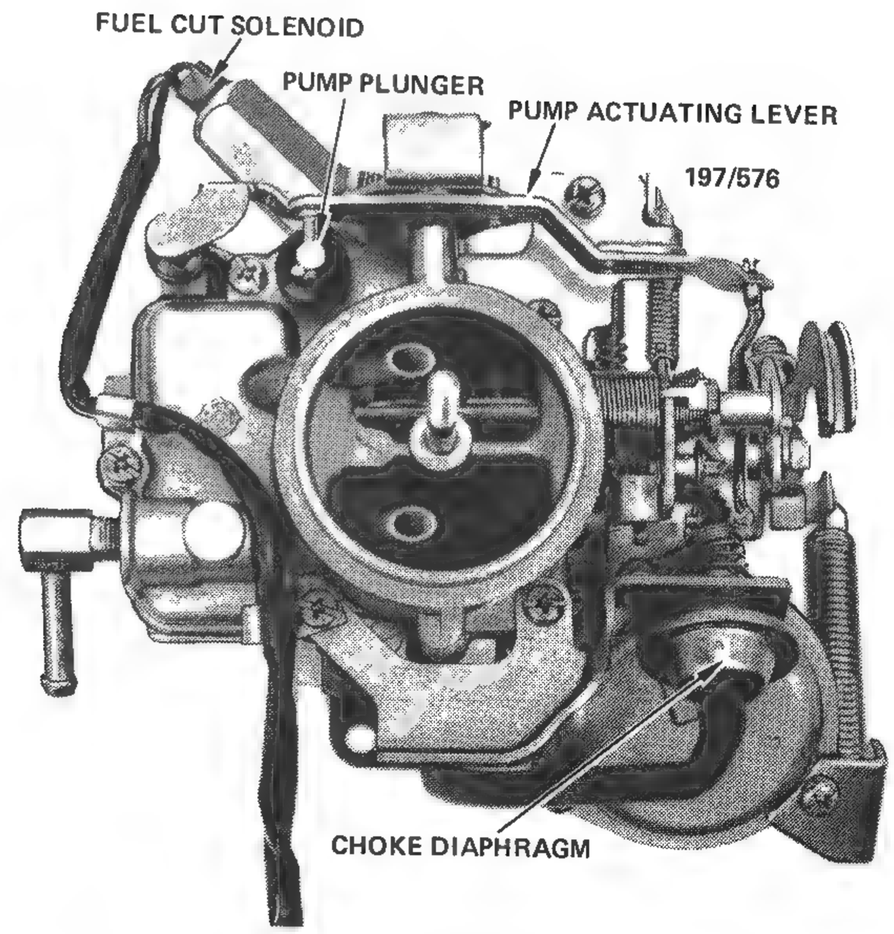

Top view of carburettor.

disconnect the accelerator cable from the carburettor.

(8) Loosen the screws at the choke outer cable clamp and the choke lever and disconnect the choke cable from the carburettor.

(9) Remove the four retaining nuts from the base of the carburettor.

(10) Raise the carburettor from its base just above the four mounting studs and move the carburettor sideways, away from the servo diaphragm to unhook the primary throttle linkage from the servo diaphragm. Remove the carburettor from the vehicle.

(11) Remove the old gasket from the inlet manifold and plug the hole in the inlet manifold with a piece of lint free cloth to prevent the entry of dirt.

Installation is a reversal of the removal procedure with attention to the following points:

Use a new gasket between the carburettor and the inlet manifold. If necessary carefully scrape the gasket surfaces clean, making sure that no gasket material is dropped into the inlet manifold.

Check the carburettor for fuel and vacuum leaks and adjust the idling speed after the engine has warmed up. Refer to the Engine Tune-up section for the correct procedure.

TO DISMANTLE

NOTE: Keep each section of the carburettor separate and, as far as possible, in the order of removal. This will assist in assembly.

(1) Remove the carburettor as previously described.

(2) Disconnect the accelerator pump actuating lever from the top cover. Remove the actuating lever from the accelerator pump plunger and disengage it from the rod to the throttle lever.

(3) Remove the screws securing the top cover to the main body and place them aside together with the choke cable mounting bracket and the choke diaphragm.

(4) Separate the top cover from the main body and disengage the fast idle rod from the choke lever. Place the top cover aside.

(5) Invert the main body and remove the accelerator pump spring from the accelerator pump plunger well. Also remove the two discharge weights and the spring from the outlet port.

(6) Disconnect the diaphragm lever from the throttle lever and disconnect the throttle return spring.

(7) Remove the hollow screw from the bottom centre of the throttle body.

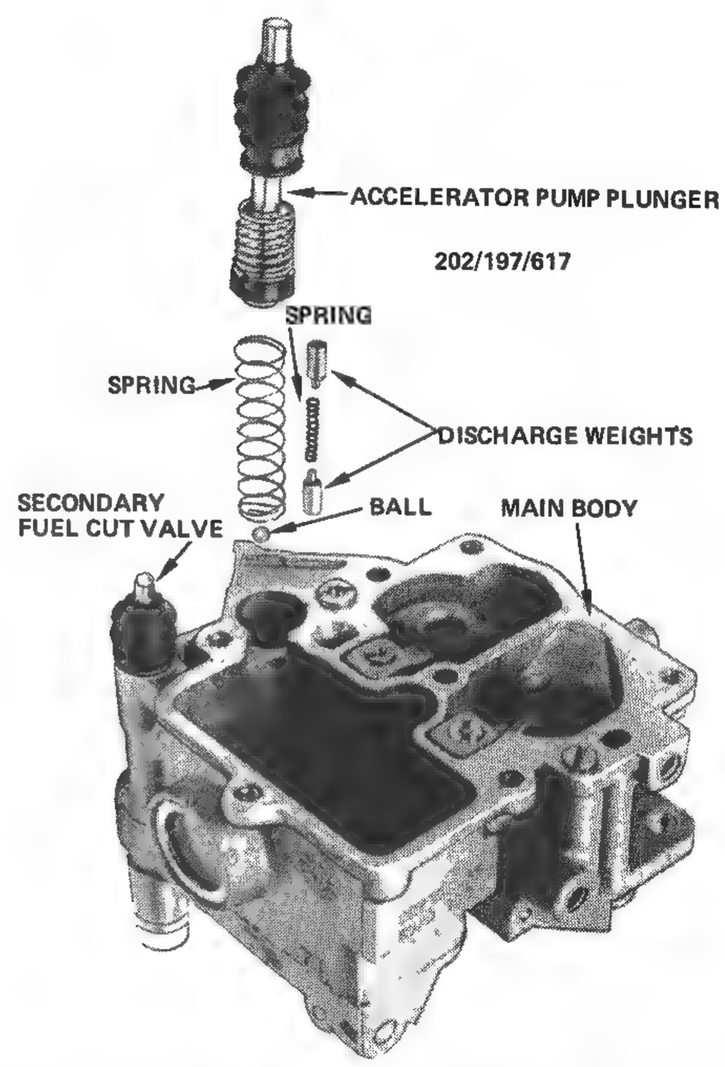

Dismantled view of accelerator pump components.

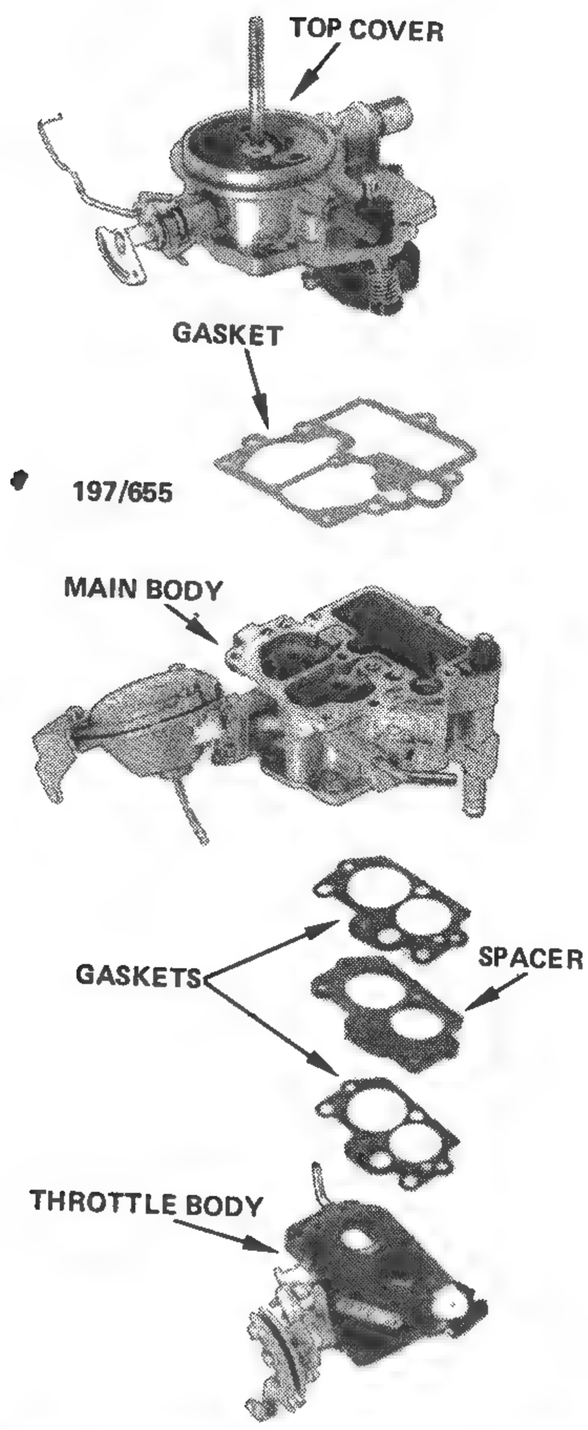

View of carburettor dismantled into its main components.

(8) Turn the main body over and remove the screws securing the main body to the throttle body.

(9) Separate the main body from the throttle body. The carburettor is now separated into its main components for servicing.

TO SERVICE TOP COVER

(1) Remove the accelerator pump plunger and dust boot from the top cover. Inspect the plunger cup for wear or scoring on the lip and renew the plunger assembly where necessary.

(2) Thoroughly clean the top cover in a suitable solvent.

(3) Unscrew the slow air bleeds and wash them out in solvent. Do not use wire or drills to clean out the air bleeds as damage could result. Instal and firmly tighten the slow air bleeds.

(4) Withdraw the float lever pin, lift away the float and using a suitable spanner remove the needle valve assembly. Clean out or renew the gauze filter above the needle valve as necessary. Remove the spring clip retaining the needle into the needle valve and inspect the sealing surface of the needle for scores and pits. Renew the needle valve assembly where necessary.

(5) Check the float for punctures and obvious damage. Renew the float where necessary.

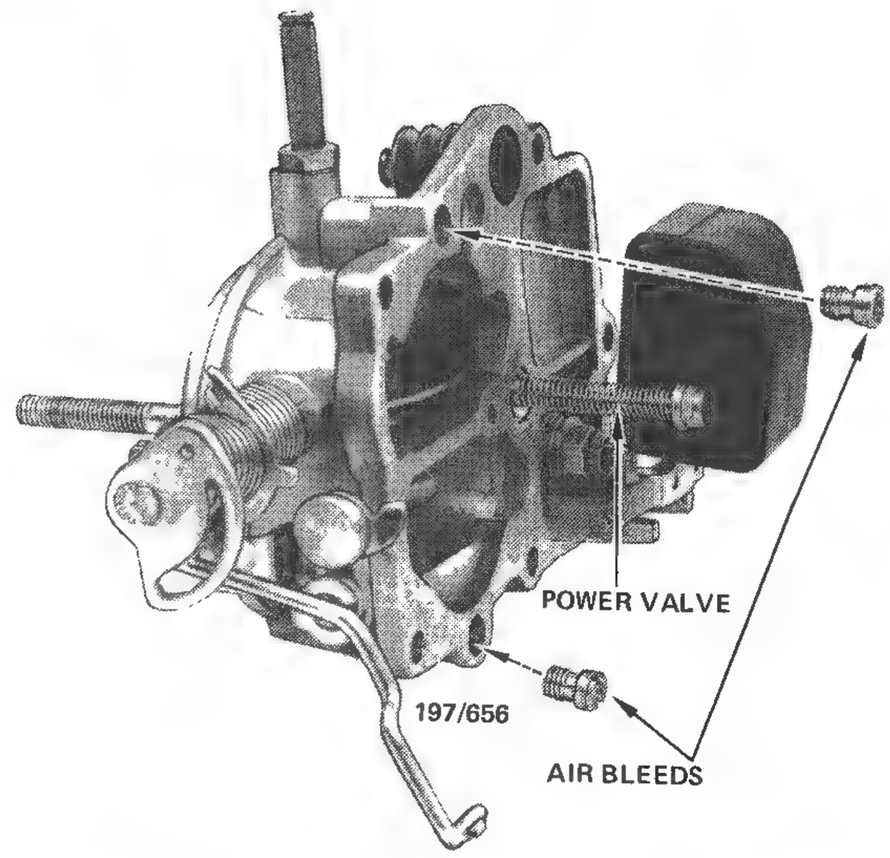

View of top cover with air bleeds removed.

(6) Assemble the needle valve and instal it with the gauze filter to the top cover.

(7) Instal the float to the top cover and insert the float lever pin. Check and if necessary adjust the float level as described later in this section.

(8) Instal the accelerator pump plunger and rubber boot.

NOTE: Do not remove the choke valve or power valve piston from the top cover. If they are excessively worn or damaged, the top cover assembly should be renewed. Any binding or sticky linkages should be freed up to ensure correct operation.

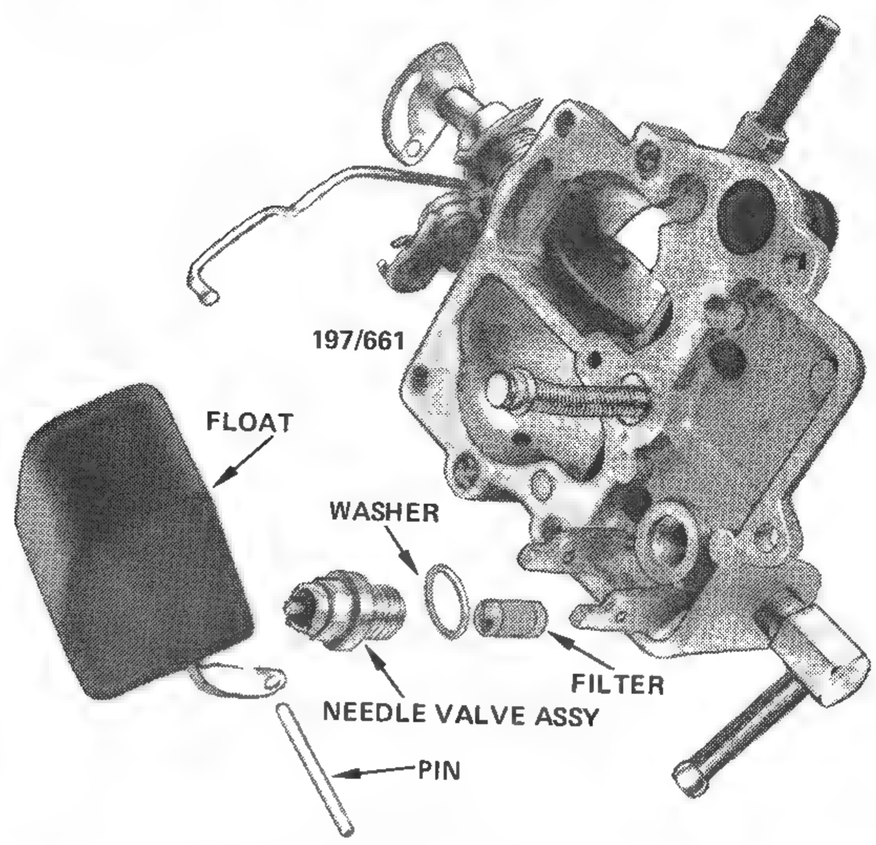

Dismantled view of the float and needle valve assembly removed from the top cover.

TO SERVICE MAIN BODY

NOTE: A secondary fuel cut off system is fitted to cut the fuel flow to the secondary throttle valve during deceleration. Do not attempt to dismantle the valve and observe correct lever clearances as described under Adjustments.

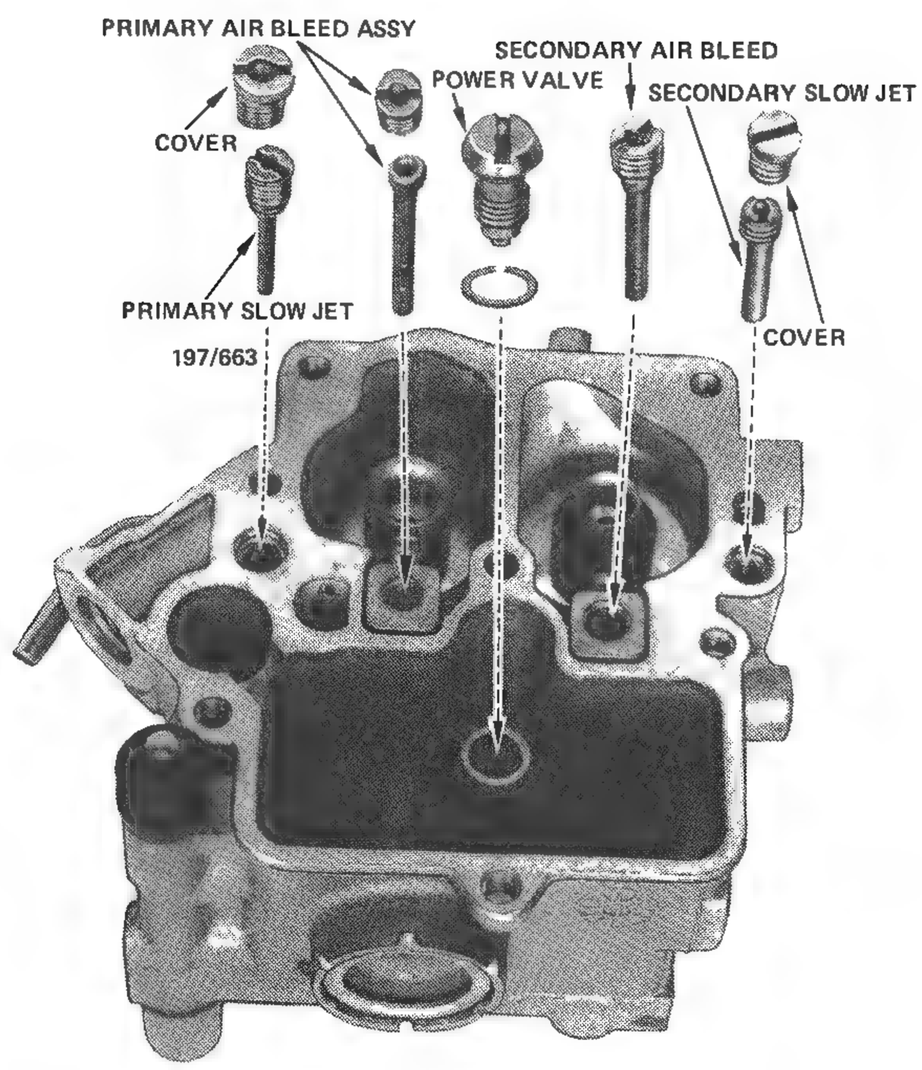

View of main body with jets removed.

(1) Remove the fuel cut solenoid and check with the aid of a 12 volt battery. The solenoid plunger should move inwards when the leads of the solenoid are connected to a battery.

(2) Remove the screws attaching the secondary throttle valve diaphragm body to the main body and remove the valve body. Check the valve by pushing in the diaphragm lever, then blocking the vacuum inlet port. Release the diaphragm lever but keep vacuum inlet port covered for approximately half a minute, check that the diaphragm lever does not move during that time and renew as necessary.

(3) Thoroughly clean the main body in a suitable solvent and blow dry with compressed air.

(4) Remove the primary slow jet cover and jet from its position near the accelerator pump plunger well.

(5) Remove the secondary slow jet cover and jet from its position beside the secondary barrel.

(6) Unscrew the primary and secondary air bleeds from their positions above the venturis.

(7) Remove the power valve from the bottom of the float chamber.

(8) Unscrew the plugs on the base of the float chamber and remove the primary and secondary main jets.

NOTE: The jets in the primary and secondary circuits must not be intermixed or poor performance or economy will result.

(9) Clean each jet thoroughly in a suitable solvent and blow out with compressed air. Do not clean out any jet with wire or a drill bit as damage will result.

(10) Renew any jet which is obviously worn and instal the jets to their respective positions using new gaskets where necessary.

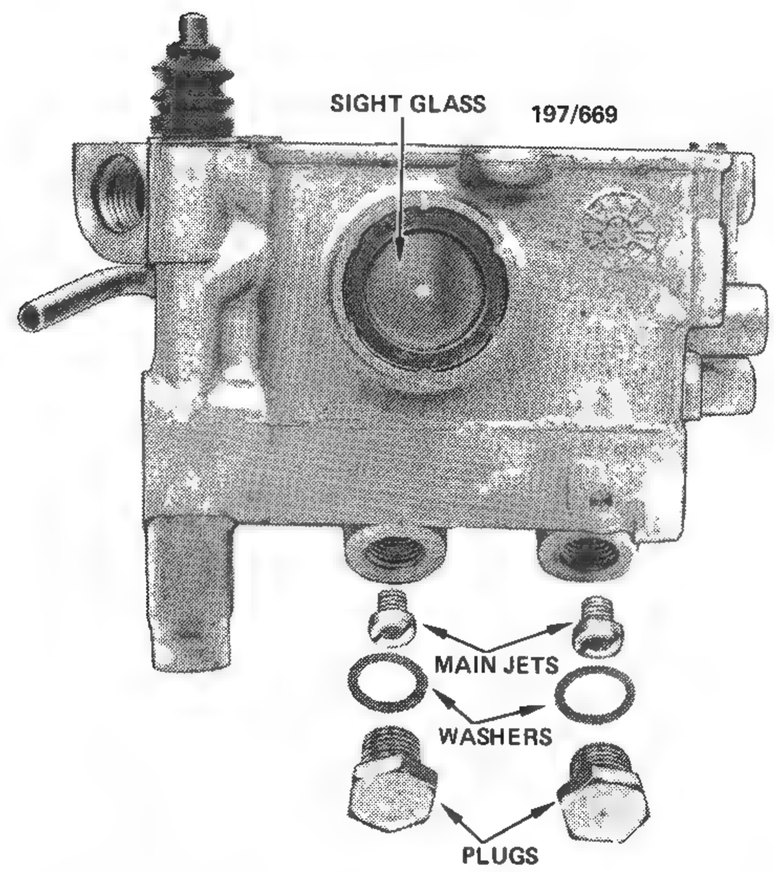

View of main body with main jets removed.

(11) Using feeler gauges and a straight edge check the top and bottom surfaces of the main body for distortion and if found to be excessive, the main body should be renewed.

TO SERVICE THROTTLE BODY

Due to the close tolerances used by the manufacturer it would be impossible to reproduce the fit of the throttle valve shafts in the throttle body. For this reason if any damage or wear is apparent in the throttle valves or shafts the complete throttle body should be renewed.

Servicing of the throttle body consists of cleaning the body in a suitable solvent and blowing dry with compressed air. The mixture screw should not be removed or adjusted as this will disturb the idle mixture which is set to comply with the emission control regulations. The external levers and linkage should be checked for ease of movement and any sticking of the linkage should be rectified.

TO ASSEMBLE

Assembly is a reversal of the dismantling procedure with attention to the following points:

(1) Using new gaskets, assemble the throttle body to the main body and securely tighten the retaining screws. Ensure that the hollow screw is installed to its original position.

(2) Place the accelerator pump ball and spring into the pump plunger well. Position the weights with the spring interposed into the pump outlet port.

(3) Instal a new top cover gasket to the top cover then fit the fast idle rod to the choke lever.

(4) Assemble the top cover to the main body, correctly position the brackets and fit and securely tighten the retaining screws.

(5) Connect the accelerator pump actuating lever to the throttle lever rod, the accelerator pump plunger and the top cover.

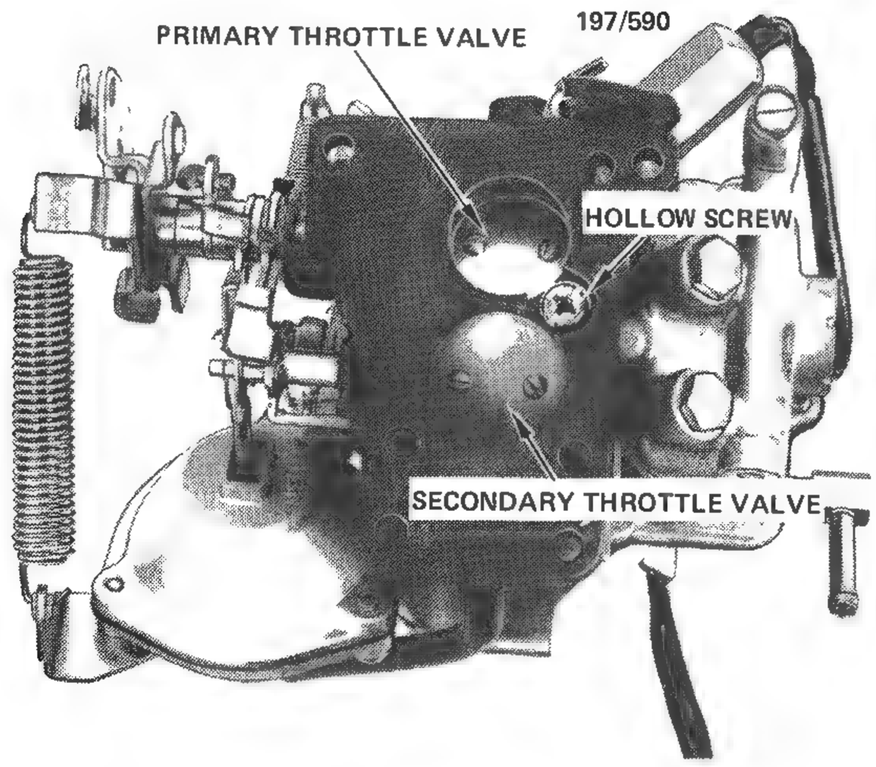

Underside view of carburettor.

(6) Check the operation and adjustment of all linkages.

(7) Instal the carburettor to the inlet manifold as previously described.

ADJUSTMENTS

To Adjust Float Level

NOTE: A dot in the centre of the sight glass indicates the correct fuel level with the vehicle on a level surface. If the fuel level was correct before the carburettor was removed and dismantled and the needle valve or float assembly was not renewed then the fuel level should not require adjustment.

(1) With the top cover removed from the carburettor, invert the top cover and allow the float seat tab to rest against the needle valve.

(2) Remove the top cover gasket and measure the distance from the upper edge of the float to the carburettor top cover gasket surface. This distance should be 11 mm.

If adjustment is required bend the float seat tab

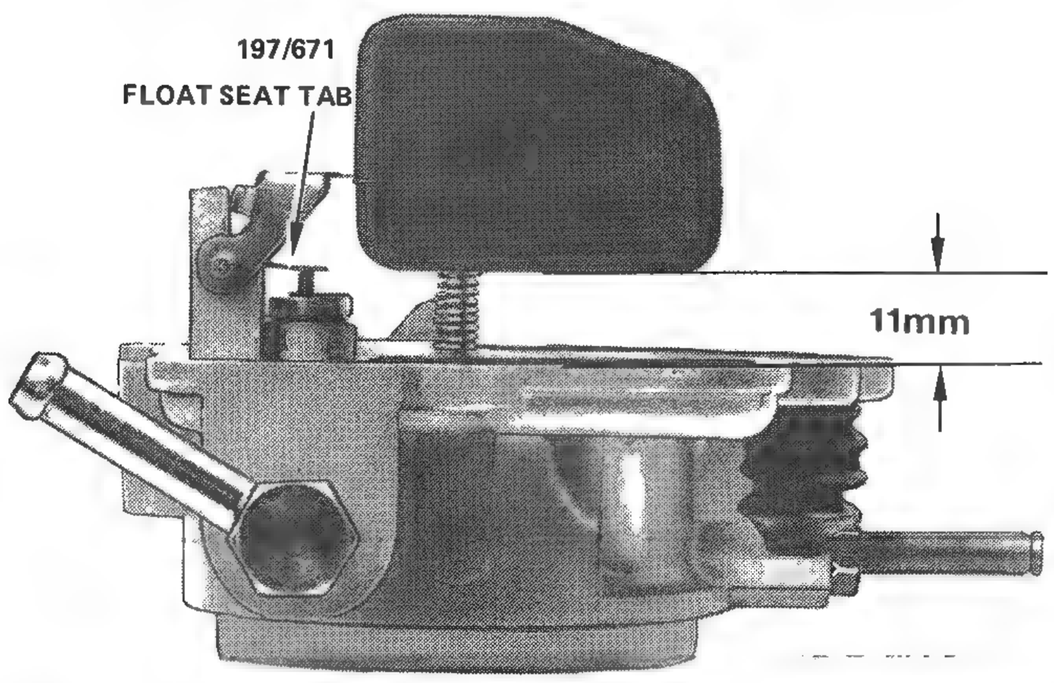

With the top cover inverted measure the distance between the float and the top cover gasket surface.

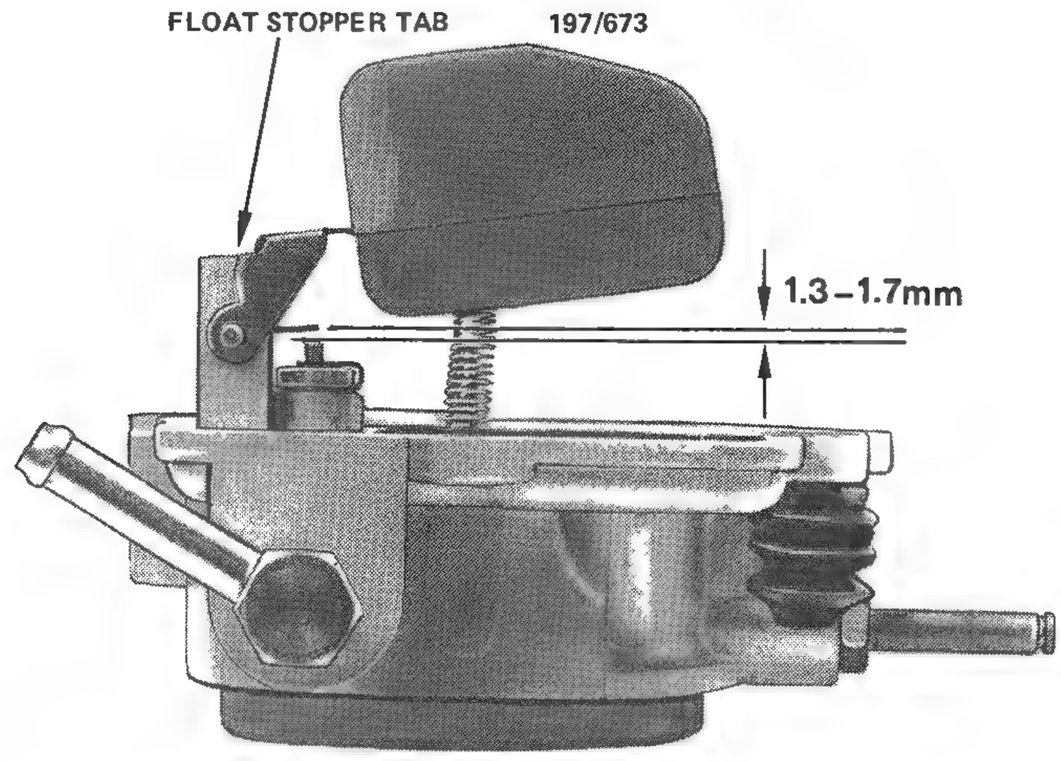

With the top cover inverted and the float lifted up measure the distance between the needle valve and the float seat tab.

gently with a pair of long nosed pliers until the desired measurement is obtained.

(3) With the top cover still inverted raise the float with the fingers until the float stopper tab contacts its stop.

(4) Measure the distance between the needle valve and the float seat tab, this distance should be between 1.3 and 1.7 mm.

If adjustment is required gently bend the float stopper tab with a pair of long nosed pliers until the desired measurement is obtained.

To Adjust Secondary Throttle Valve

NOTE: The secondary throttle valve should be allowed to open when the primary throttle valve is opened 46 degrees from the fully closed position. This angle can be assessed by positioning a 6.0 mm drill shank between the primary throttle valve and bore.

(1) Remove the carburettor from the vehicle as previously described.

(2) Position a 6.0 mm drill shank between the primary throttle valve and bore.

(3) Ensure that the secondary throttle valve is fully closed.

(4) Bend the connecting rod with a pair of pliers until it just comes into contact with the primary throttle lever.

(5) Check the adjustment by withdrawing the drill, closing both throttle valves and then gradually opening the primary throttle valve until the secondary throttle valve just commences to open. In this position the drill should just slide neatly between the primary throttle valve and the primary throttle bore.

To Adjust Secondary Fuel Cut Valve

(1) Remove the air cleaner assembly from the vehicle as previously described.

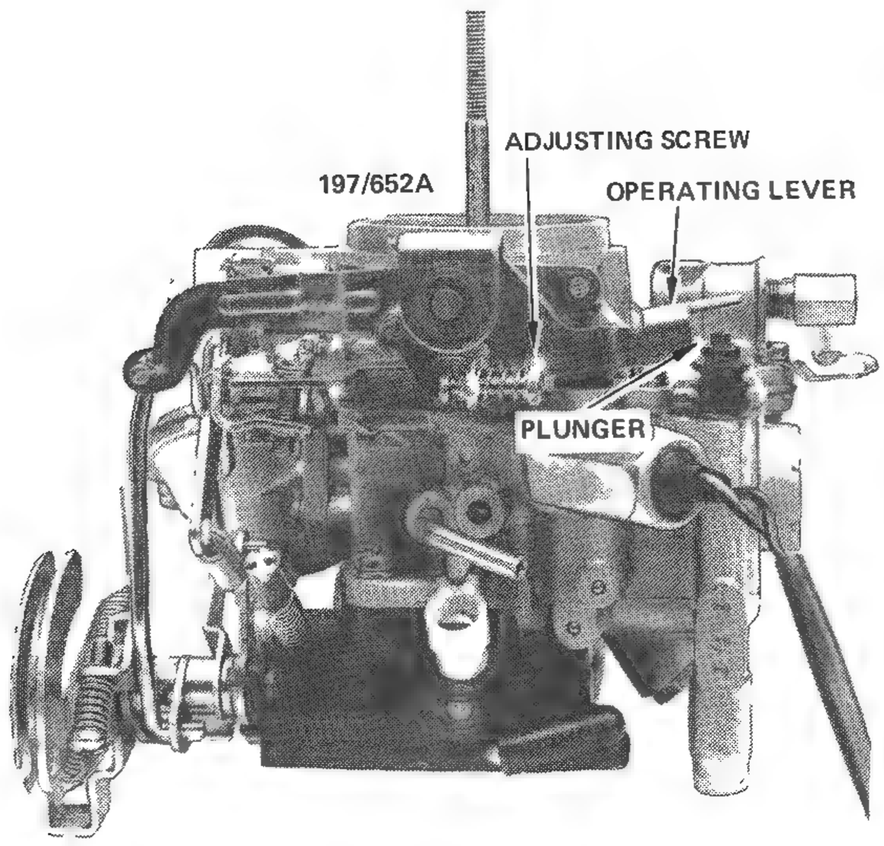

Side view of carburettor showing the location of the secondary fuel cut valve checking and adjusting points.

(2) Ensure that the throttle lever is in the fully released position.

(3) Measure the clearance between the secondary fuel cut valve plunger and the operating lever. The clearance should 1.9 to 2.3 mm.

(4) If necessary adjust the springloaded adjusting screw, located below the secondary fuel cut valve operating lever, to achieve the correct clearance.

4. FUEL PUMP

Special Equipment Required:

To Test Pump – Suitable pressure gauge, calibrated measuring beaker, 'T' junction

DESCRIPTION

The fuel pump is mechanically driven by the camshaft and is mounted on top of the engine next to the carburettor. Three fuel hoses are connected to the fuel pump, one from the fuel tank, one to the carburettor and the other fuel hose is a fuel return line to the fuel tank.

The fuel pump is non adjustable and non repairable and must be renewed as a unit when found to be defective.

TO TEST PUMP

If the fuel pump is thought to be defective because of insufficient fuel supply to the carburettor, carry out the following tests before removing the fuel pump from the engine:

(1) Check the fuel filter and fuel lines for blockage. Ensure that fuel is in the fuel tank.

(2) Remove the air cleaner as previously described and instal a 'T' junction in the fuel hose at the carburettor float chamber connection, fit a pressure gauge at, or as near as possible to the 'T' junction.

(3) Start the engine and ensure that the fuel system

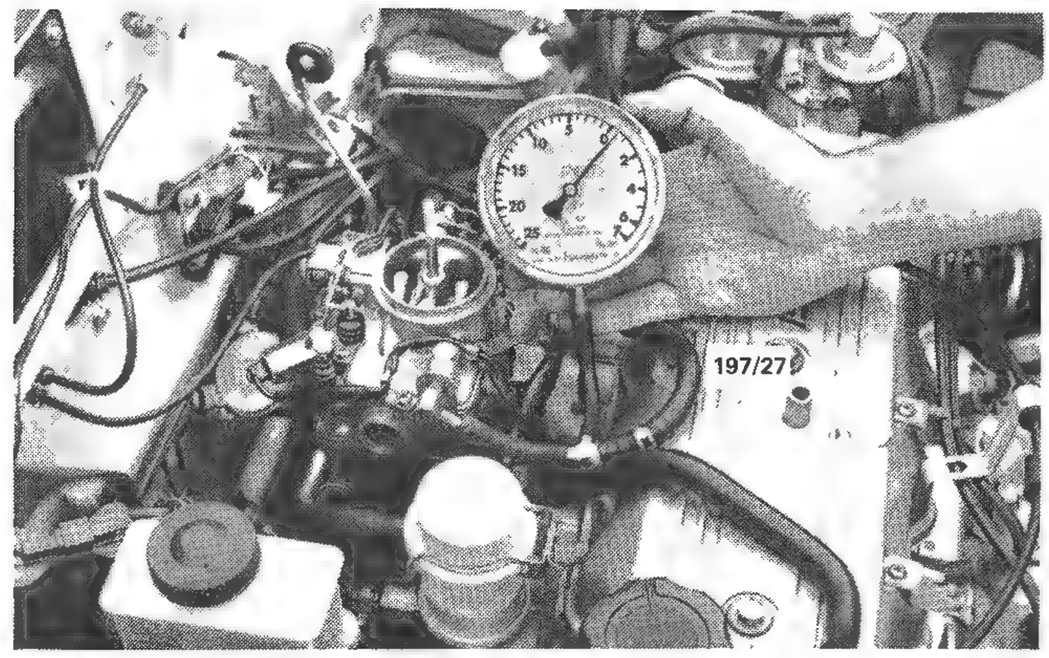

Checking fuel pump pressure.

is clear of trapped air otherwise an incorrect reading on the gauge will be obtained.

(4) With the engine running at idle speed check the reading on the gauge. This reading should be within Specifications.

(5) If the pressure reading is correct then stop the engine and remove the 'T' junction and gauge.

(6) Place the still disconnected fuel delivery hose into a suitable calibrated measuring beaker.

(7) Start the engine, not exceeding idle speed, and run the engine for one minute. The amount of delivered fuel must be to Specifications.

If the fuel pump is found to be defective it must be renewed.

TO REMOVE AND INSTAL

(1) Raise the engine bonnet and fit covers to both front fenders. Remove the air cleaner assembly as previously described.

(2) Disconnect the hoses from the fuel pump and plug the hoses to prevent the entry of dirt.

(3) Remove the bolts securing the fuel pump to the cylinder head and withdraw the fuel pump, spacer and gaskets.

Installation is a reversal of the removal procedure with attention to the following:

Ensure that all traces of old gasket material is removed from the fuel pump, spacer and cylinder head.

Instal new gaskets to both sides of the fuel pump spacer with a suitable sealer.

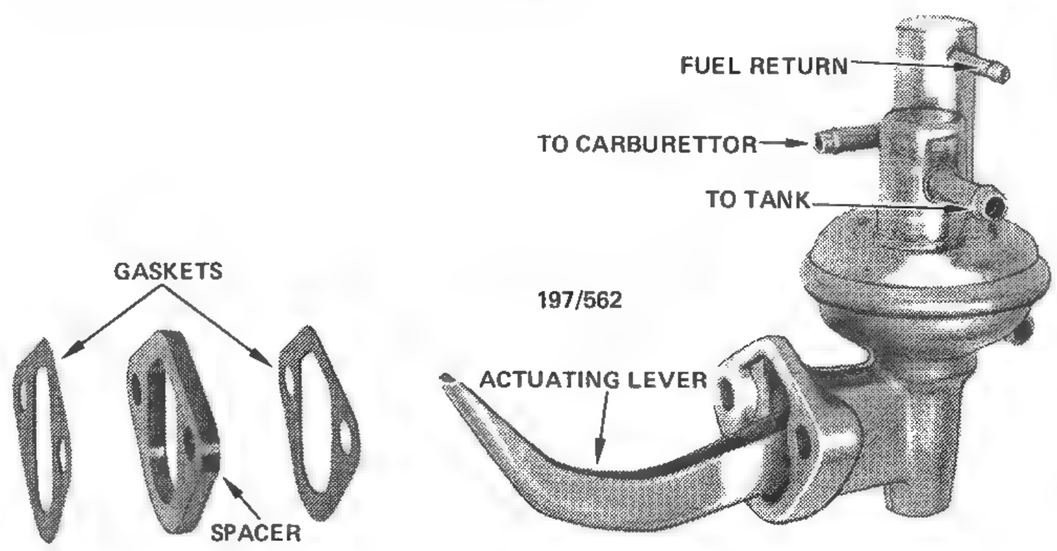

View of fuel pump removed.

5. FUEL FILTER

The fuel filter is an inline paper element type and is installed between the fuel tank and the fuel pump in the fuel delivery line. It is situated in the engine compartment and should be periodically renewed as described in the Engine Tune-up section.

6. FUEL TANK

TO REMOVE AND INSTAL

(1) Open the luggage compartment lid and position the luggage compartment carpet over the backrest of the rear seats thus exposing the hinges of the backrests.

(2) Remove the bolts attaching the backrests hinges to the body.

(3) Taking care not to tear the carpet, carefully lay the backrests in the luggage compartment.

NOTE: Two hooks retain the rear seat in position. These hooks are located under the front of the seat, approximately 30 cm either side of the centre.

(4) Simultaniously push down and backwards over each hook to release the rear seat.

(5) Remove the now exposed fuel sender unit cover and disconnect the wire connector from the sender unit.

(6) Through the fuel tank filler neck, syphon out the fuel from the fuel tank.

NOTE: If difficulty is incurred syphoning the fuel out through the filler neck, remove the sender unit and syphon the fuel out through the sender unit aperture in the fuel tank.

(7) Raise the rear of the vehicle and place on safety stands.

(8) To assist in assembly, suitably mark all the hoses to the fuel tank.

(9) Disconnect the fuel return hose from the front of the fuel tank.

(10) Disconnect the fuel delivery hose from the fuel delivery line.

(11) Disconnect the vapour hose from the check valve pipe.

(12) Disconnect the breather hose from the pipe to the filler neck.

(13) Disconnect the filler hose from the filler neck.

(14) Remove the two bolts retaining the front of the fuel tank to the body.

(15) Support the fuel tank, remove the two bolts retaining the rear of the fuel tank to the body and remove the fuel tank from the vehicle.

NOTE: Should the sender unit require removal, mark the sender unit position and, with a suitable tool, twist the locking ring securing the sender unit to the tank. Withdraw the sender unit from the tank. Renew the sealing gasket before replacing the sender unit.

Installation is a reversal of the removal procedure with attention to the following points:

Ensure that all the hoses are in a serviceable condition and that they are returned to their original positions.

Fill the fuel tank with clean fuel and check for fuel leaks.

7. ACCELERATOR CABLE

TO REMOVE AND INSTAL

(1) Disconnect the accelerator cable from the accelerator pedal by pushing the plastic grommet containing the cable through the hole at the end of the accelerator pedal arm.

(2) Pull the cable through the now exposed slot in

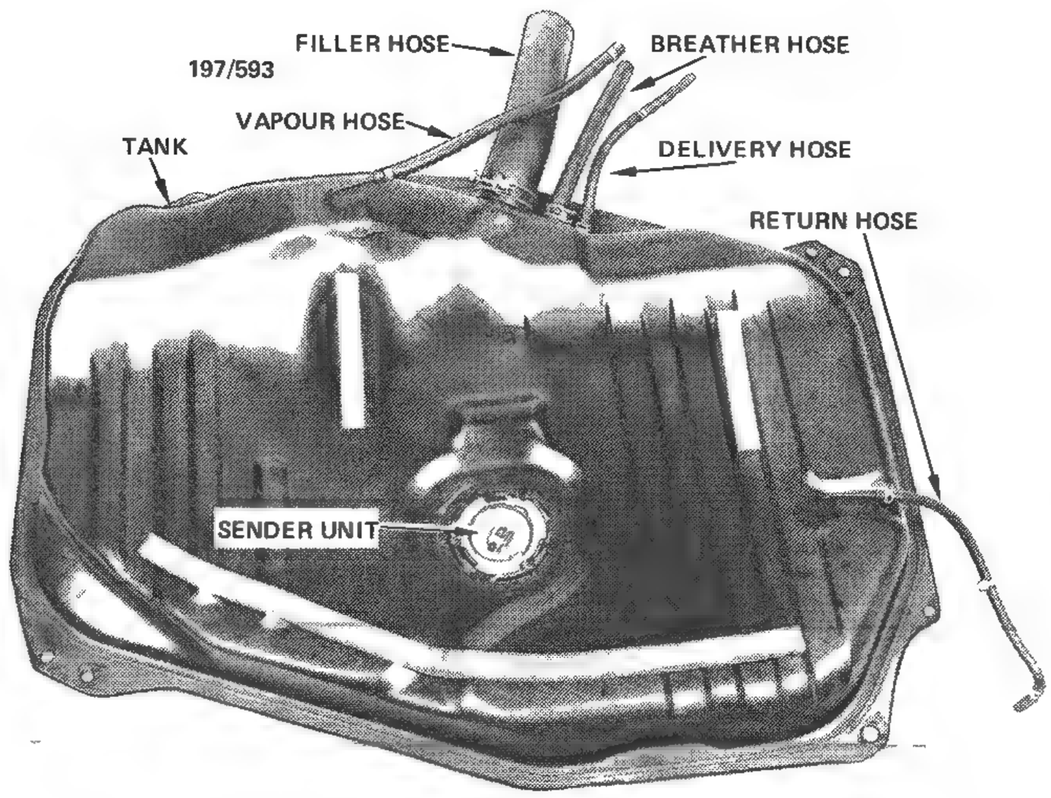

Fuel tank removed from vehicle.

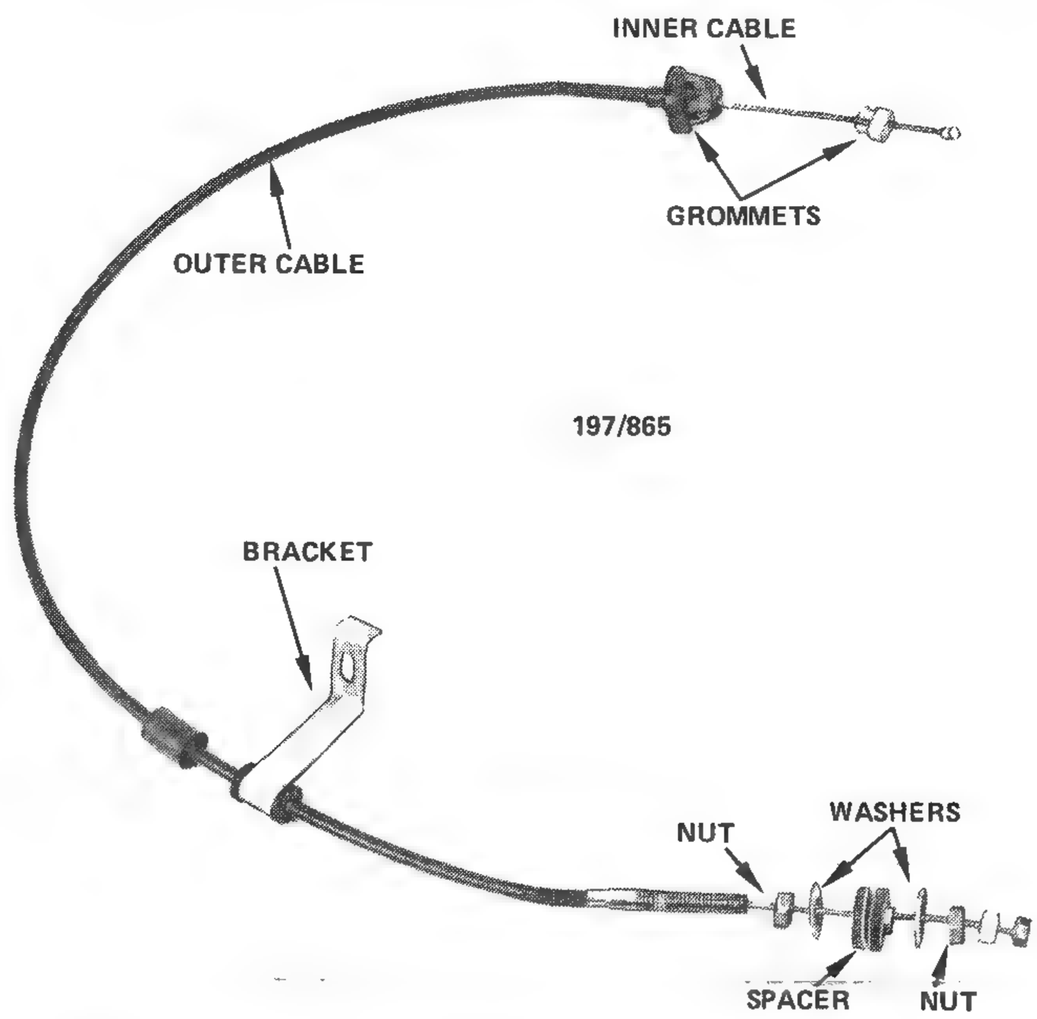

View of accelerator cable removed from the vehicle.

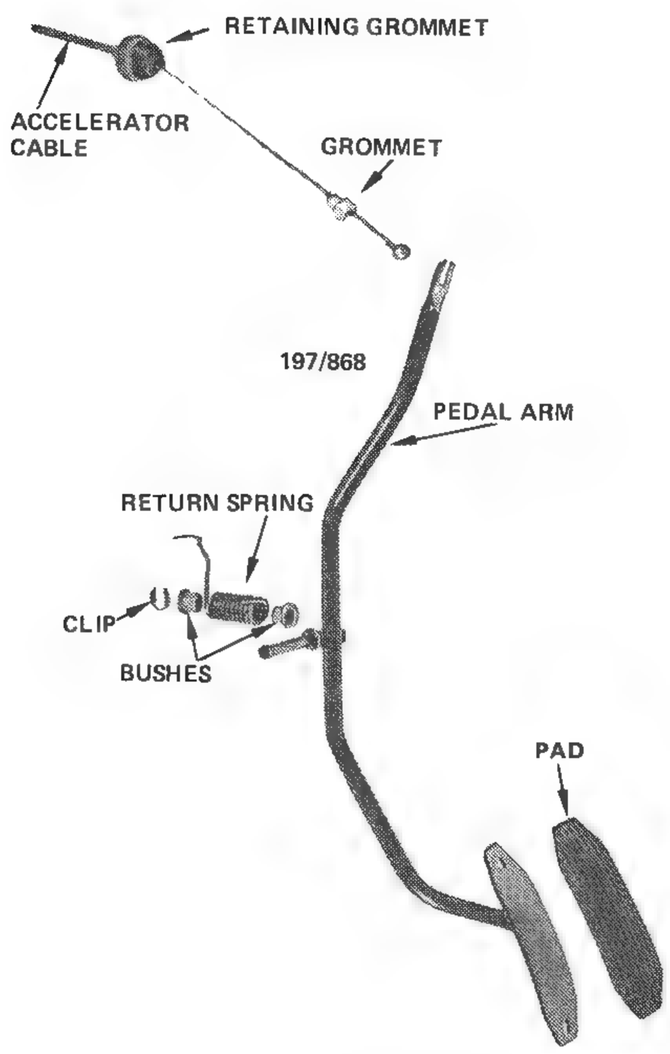

Dismantled view of accelerator pedal.

the accelerator pedal arm and disconnect the cable from the arm.

(3) Working in the engine compartment, remove the air cleaner assembly from the vehicle as previously described.

(4) Remove the cable bracket from the rocker cover.

(5) Loosen the nut at the end of the cable on the accelerator cable adjuster and withdraw the cable from the adjustment bracket.

(6) Rotate the throttle lever on the carburettor to the full throttle position and disconnect the inner cable from its retainer slot.

(7) Using a pair of suitable screwdrivers, push in the upper and lower lock tabs of the cable retaining grommet to release the accelerator cable from the bulkhead.

(8) Remove the cable from the engine compartment, by withdrawing the cable through the aperture in the bulkhead and removing it from the vehicle.

Installation is a reversal of the removal procedure with attention to the following point:

Ensure that the grommets are correctly seated prior to adjusting the accelerator cable as later described in this section.

TO ADJUST

(1) Raise the bonnet and fit fender covers to both front fenders.

(2) Remove the air cleaner assembly from the vehicle as previously described.

(3) With the aid of an assistant, depress the accelerator pedal fully and check that the throttle valve on the carburettor is fully open.

(4) If necessary loosen the locknuts and adjust the accelerator cable adjuster.

(5) If correctly adjusted the free play of the inner cable at the throttle lever on the carburettor should be approximately 1.3 mm.

SPECIFICATIONS

Type	Single dry plate
Pressure plate spring	Diaphragm type
Operation	Cable
Driven plate:	
Wear limit	0.3 mm above rivet heads
Run out limit	1.0 mm
Outside diameter –	
1.3 litre	184 mm
1.5 litre	190 mm
Clutch pedal:	
*Height	230 mm
Free travel	11–17 mm
Release lever free play	2–3 mm
Release bearing	Ball thrust type, prelubricated and sealed

*Measured horizontally from centre of clutch pedal pad to bulkhead, without carpet.

TORQUE WRENCH SETTINGS

Pressure plate to flywheel bolts	27 Nm
Flywheel to crankshaft bolts	88 Nm

1. CLUTCH TROUBLE SHOOTING

CLUTCH SLIPPING

(1) Weak or broken pressure plate diaphragm spring: Check and renew pressure plate assembly.

(2) Worn driven plate facings: Check and renew clutch driven plate.

(3) Worn or scored flywheel face: Check and renew flywheel or machine flywheel face.

(4) Worn or scored pressure plate face: Check and renew pressure plate assembly.

(5) Insufficient release lever free play: Check and adjust clutch cable.

NOTE: In most cases clutch slippage is first evident by a marked increase in engine revs, for no apparent reason, when pulling up a steep hill. The clutch condition can be positively diagnosed as follows: With the handbrake firmly applied, and with the road wheels chocked, place the transmission in top gear and with the engine revving at approximately 1500 rpm, slowly release the clutch. Clutch slipping is evident if the engine does not stall. Make the test as quickly as possible to prevent any further clutch damage. Always ensure that the release lever free play is correct before carrying out this test.

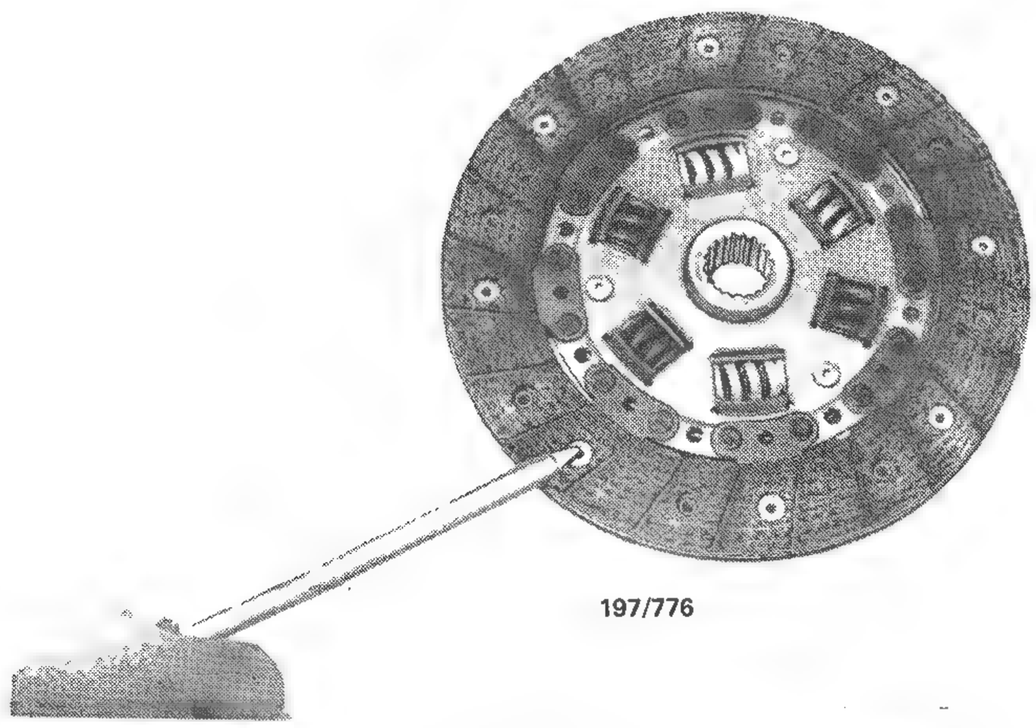

Renew the clutch driven plate if the friction material is worn down to or is within 0.3 mm of the rivets.

CLUTCH SHUDDER

(1) Oil on (gummy) driven plate facings: Check and renew clutch driven plate.

(2) Scored pressure plate or flywheel face: Renew pressure plate assembly or machine flywheel.

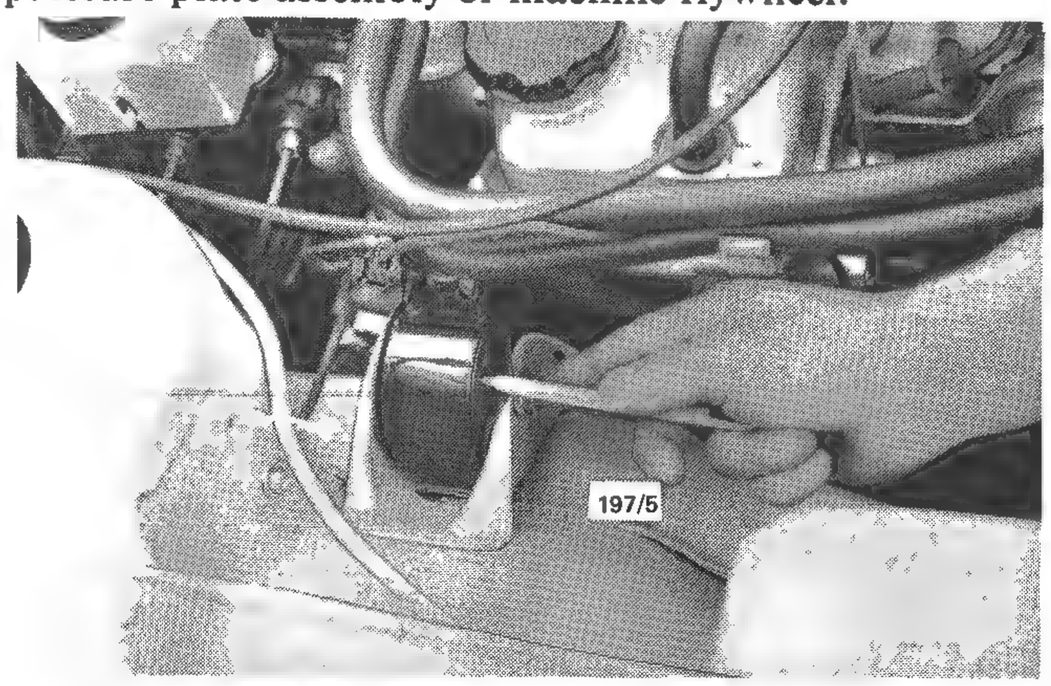

Check the engine mountings for damage and looseness.

(3) Loose or damaged driven plate hub: Check and renew clutch driven plate.

(4) Loose driven plate facings: Renew clutch driven plate.

(5) Cracked pressure plate face: Renew clutch pressure plate assembly.

NOTE: Clutch shudder is usually most evident when reversing up an incline. As loose or damaged engine mountings are a cause for clutch shudder, thoroughly check the engine mounting rubbers and mounting hardware for damage or looseness before removing the clutch for inspection.

CLUTCH GRAB

(1) Gummy driven plate facings: Renew clutch driven plate.

(2) Cracked pressure plate face: Renew clutch pressure plate assembly.

(3) Loose or broken engine mountings: Check and renew engine mountings as necessary.

NOTE: Thoroughly check the engine mounting rubbers and mounting hardware for damage or looseness before removing the clutch for inspection.

INSUFFICIENT CLUTCH RELEASE

(1) Clutch driven plate warped: Renew clutch driven plate.

(2) Excessive release lever free play: Adjust clutch cable.

(3) Clutch pedal height too low: Adjust clutch pedal height.

NOTE: In most cases insufficient clutch release is the result of excessive free play of the clutch release lever or insufficient pedal height. Ensure all adjustments are correct before removing the clutch for inspection.

RELEASE BEARING NOISE

(1) Dry or worn bearing: Check and renew bearing.

(2) Damaged pressure plate diaphragm spring: Check and renew pressure plate assembly.

(3) Insufficient release lever free play: Check and adjust clutch cable.

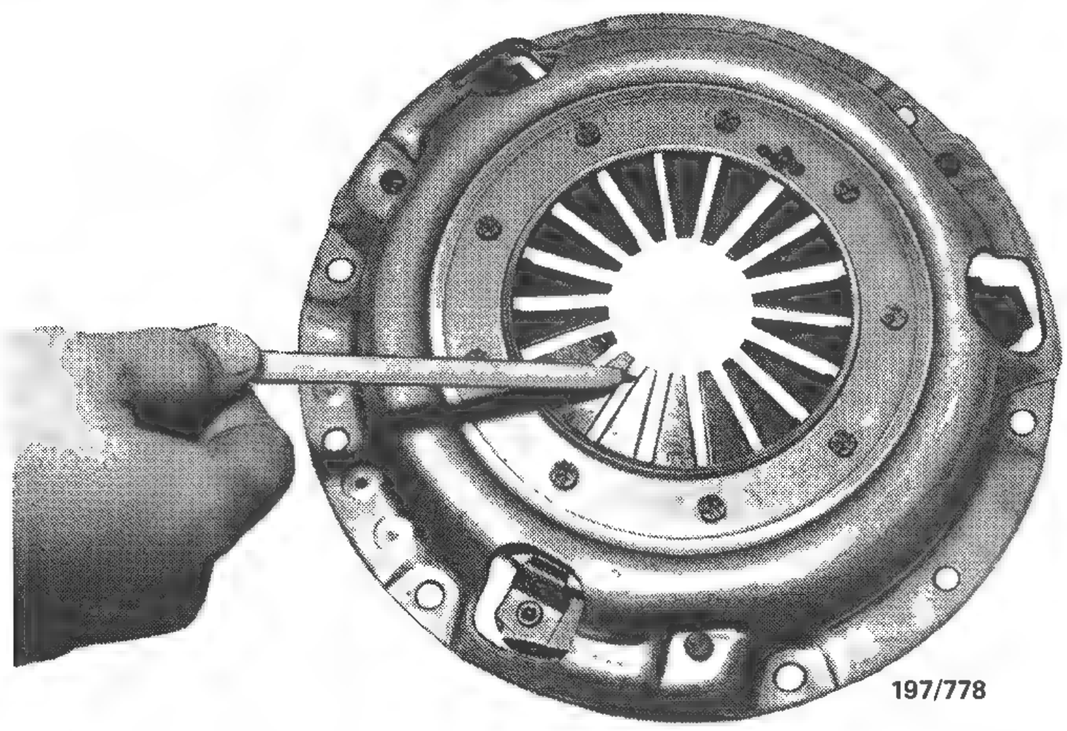

Check the clutch pressure plate diaphragm fingers for scoring and damage.

NOTE: Lightly depress the clutch pedal with the engine running to check for release bearing noise. If the release bearing is faulty and has to be renewed always check the other clutch components.

2. DESCRIPTION

The clutch consists of a single dry driven plate assembly, splined to slide on the transmission primary shaft. A diaphragm pressure plate assembly is bolted to the engine flywheel.

The driven plate is sandwiched between the pressure plate and flywheel and transmits the drive from the engine to the transmission.

Damper springs are interposed between the hub of the driven plate assembly and the plate friction surfaces in order to cushion the drive.

The release mechanism is activated by the clutch pedal via a clutch cable. The release mechanism consists of the release lever, release bearing and the diaphragm spring in the pressure plate assembly.

Operation of the clutch pedal moves the release bearing and diaphragm spring centre towards the flywheel. When the outer edge of the diaphragm deflects the clutch is caused to disengage.

3. CLUTCH UNIT AND RELEASE MECHANISM

Special Equipment Required:
To Instal – Expanding type clutch alignment tool

TO REMOVE

(1) Remove the transmission as described in the Manual Transmission section.

(2) Mark the pressure plate cover in relation to the flywheel with a dab of quick drying paint so that they may be assembled to their original positions.

NOTE: Carefully inspect the flywheel and pressure plate for alignment marks.

(3) Progressively loosen and remove the pressure plate assembly retaining bolts and washers, working in a diagonal fashion across the assembly.

(4) Remove the pressure plate and driven plate from the flywheel.

(5) Working on the transmission assembly, disconnect the return spring from the clutch release bearing.

(6) Remove the release bearing by pulling on the release bearing and pivoting the release fork outwards.

(7) Remove the lock bolt that retains the release fork to the release lever shaft. Take note of the installed positions of the components on the release lever shaft.

(8) Pull the release lever shaft upwards and remove the key, the release fork and the spring from the release lever shaft.

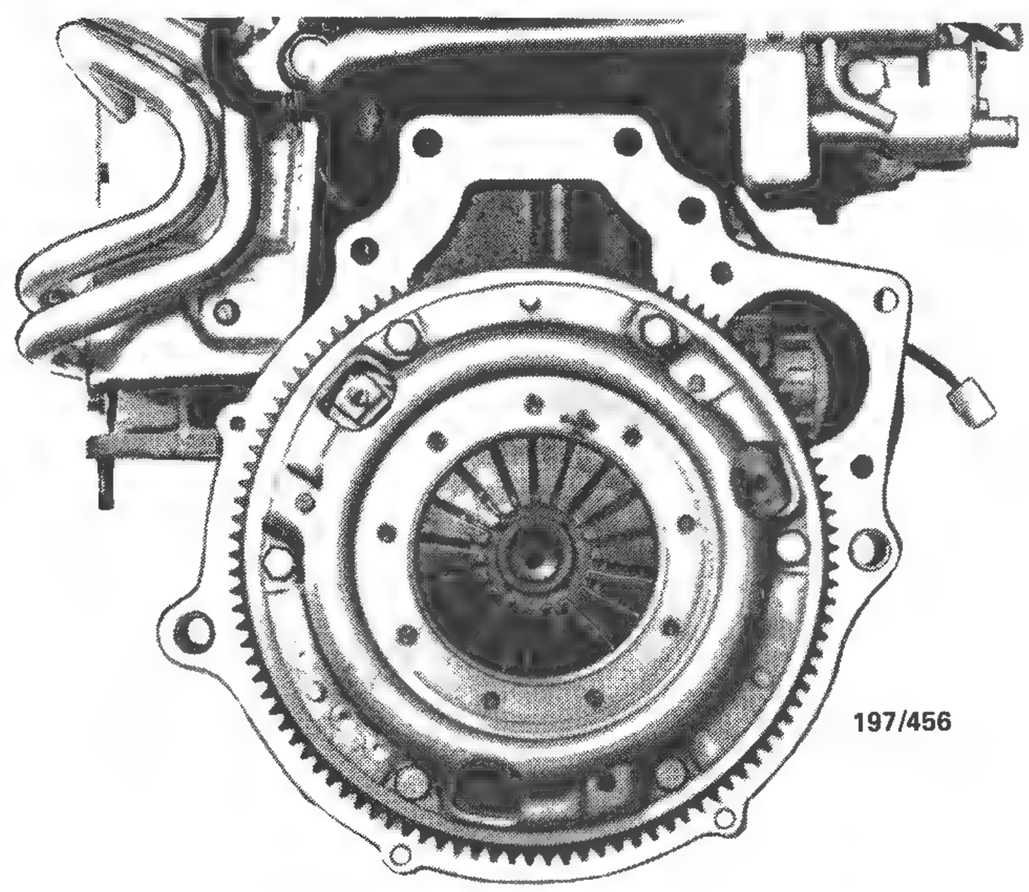

Installed view of clutch pressure plate.

(9) Withdraw the release lever shaft from the transmission taking care not to lose the dust seal on top of the transmission.

TO CHECK AND INSPECT

(1) Check the driven plate facings. If the driven plate facings are worn, highly glazed or gummy with oil, renew the driven plate as an assembly. If the driven plate is still serviceable, do not allow any cleaning fluid or grease to contaminate the plate facings.

NOTE: The driven plate must be renewed when the facings are down to or within 0.3 mm of the rivet heads. Should there be any traces of oil on the facings the source has to be investigated and rectified.

(2) Check the hub of the driven plate for looseness and the cushion springs for wear or breakage.

(3) Check the pressure plate assembly for wear on the diaphragm spring fingers, cracked diaphragm spring and distorted cover. Check that the pressure plate is not badly scored.

(4) Inspect the flywheel face for heat cracks, burn marks and scoring. Should the flywheel be scored, the flywheel can be removed and a light cut may be taken across its face in a lathe.

NOTE: The flywheel should be taken to a reliable workshop with the necessary equipment to successfully carry out this work and to ensure the run out of the flywheel is kept to a minimum.

(5) Check the release fork and release lever shaft for wear and damage. Check the release lever shaft key and groove for burrs and wear.

(6) Check the release bearing for noise or roughness. The release bearing and hub are renewed as an assembly.

(7) Check the release lever shaft bushes for wear, renew the bushes if necessary.

NOTE: When cleaning clutch parts, do not immerse the release bearing in cleaning fluid. This bearing is lubricated during assembly and requires no further lubrication in service.

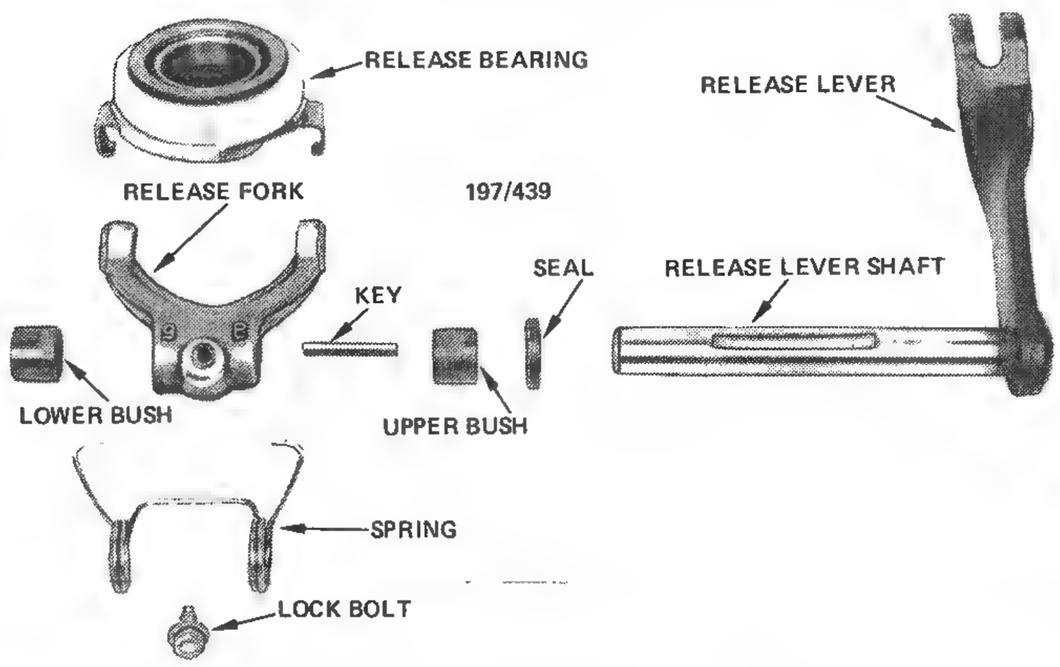

Dismantled view of clutch release components.

TO INSTAL

Installation is a reversal of the removal procedure with attention to the following points:

(1) Sparingly lubricate the splines of the transmission primary shaft with a high melting point grease. If a new driven plate is to be installed, slide the driven plate onto the primary shaft to test its ease of movement. Remove the driven plate and remove any excess grease from the driven plate hub and the primary shaft.

(2) Position the clutch driven plate onto the flywheel, with the raised cushion spring section toward the pressure plate.

NOTE: Some clutch driven plates are marked 'flywheel side' near the hub to assist in installation.

(3) Place the pressure plate assembly over the driven plate and align the marks made during dismantling, if the original pressure plate assembly is being used.

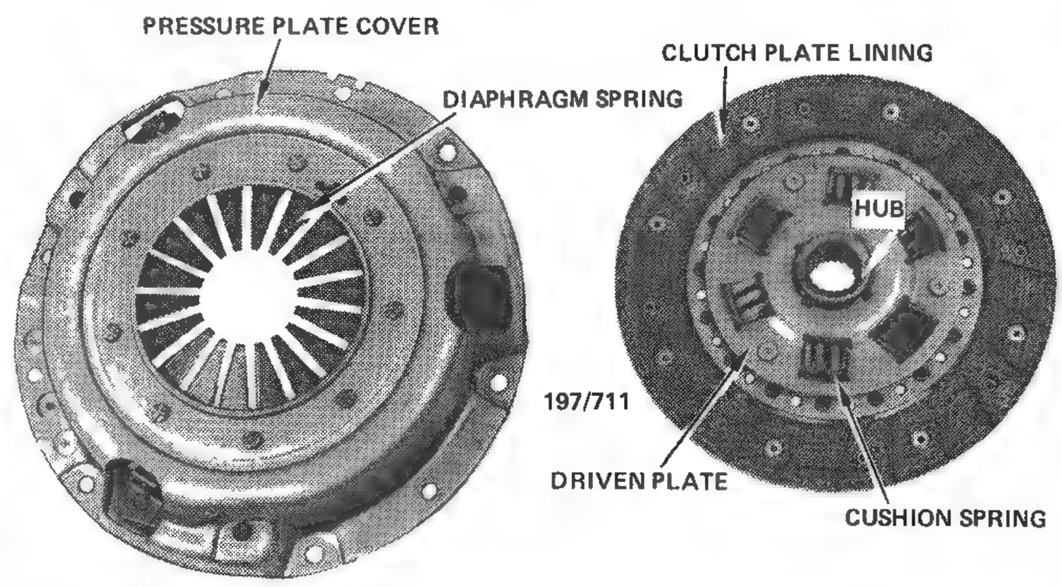

Dismantled view of clutch pressure plate assembly and driven plate.

(4) Use an expanding type clutch alignment tool to align the centre of the driven plate with the centre hole in the flywheel.

(5) Instal the pressure plate cover retaining bolts, start all bolts a few threads by hand before proceeding to tighten them in a diagonal sequence in stages to the specified torque. Refer to Specifications.

(6) Withdraw the alignment tool after tightening the pressure plate cover bolts.

(7) Instal the release lever shaft to the transmission, ensuring that the release lever shaft seal is installed in the transmission recess. Lubricate the release lever shaft bushes with a smear of universal chassis grease.

(8) As the release lever shaft is pushed down, instal the release fork key, the release fork and the spring onto the release fork shaft in that order and in the position as noted during the dismantling procedure.

(9) Instal the release bearing assembly and connect the return spring to the release bearing.

(10) Instal the lock bolt ensuring that the end of the bolt enters the locating hole in the release lever shaft correctly. Securely tighten the lock bolt.

(11) Instal the transmission assembly, if necessary

refer to the Manual Transmission section for the correct procedure.

(12) Check the clutch pedal height and adjust the release lever free play as described under Clutch Adjustments in this section.

4. CLUTCH PEDAL

TO REMOVE AND INSTAL

(1) Working inside the vehicle remove the lower dash panel, if applicable.

(2) Disconnect the clutch pedal return spring.

(3) Remove the 'C' clip and washer from the clutch pedal pivot shaft.

(4) Lift up the clutch pedal at the bottom and disconnect the clutch cable eye from the clutch pedal hook.

NOTE: Releasing the clutch cable adjusting nut and locknut at the transmission end will make this operation easier.

(5) Withdraw the pedal assembly from the pedal pivot shaft.

Installation is a reversal of the removal procedure with attention to the following points:

(1) Renew the pedal bushes if unserviceable.

(2) Lubricate the clutch pedal bushes, the clutch cable eye and the clutch pedal hook with universal chassis grease.

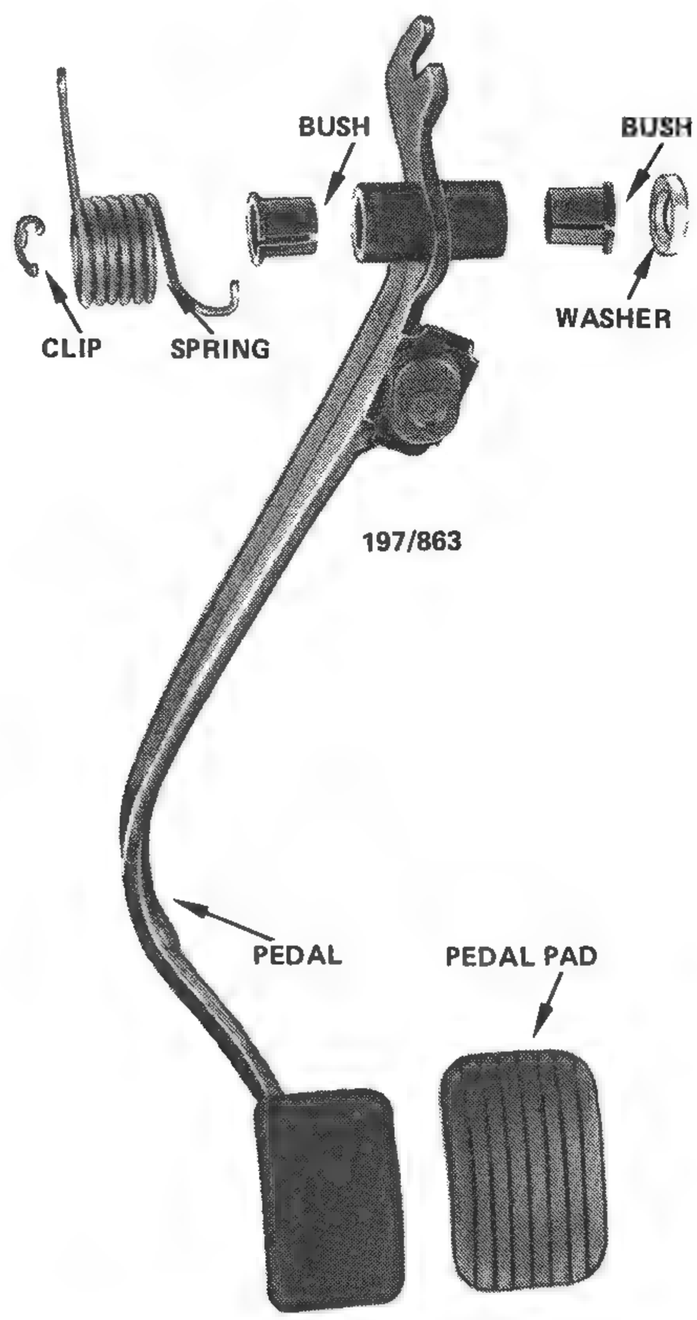

Dismantled view of clutch pedal and components.

(3) Adjust the pedal height and the clutch cable free play as described under Clutch Adjustments.

5. CLUTCH CABLE

TO REMOVE AND INSTAL

(1) Open the engine bonnet and fit fender covers to both front fenders.

(2) Remove the adjusting nut and locknut, the flat washer, the sleeve and the cable roller from the inner clutch cable at the clutch release lever.

(3) Open up the clutch cable retaining clip at the rear of the engine and remove the clutch cable from the clip.

(4) Withdraw the clutch cable from the support bracket on top of the transmission.

(5) Working inside the vehicle remove the lower dash panel, if applicable.

(6) Disconnect the clutch cable eye from the clutch pedal hook.

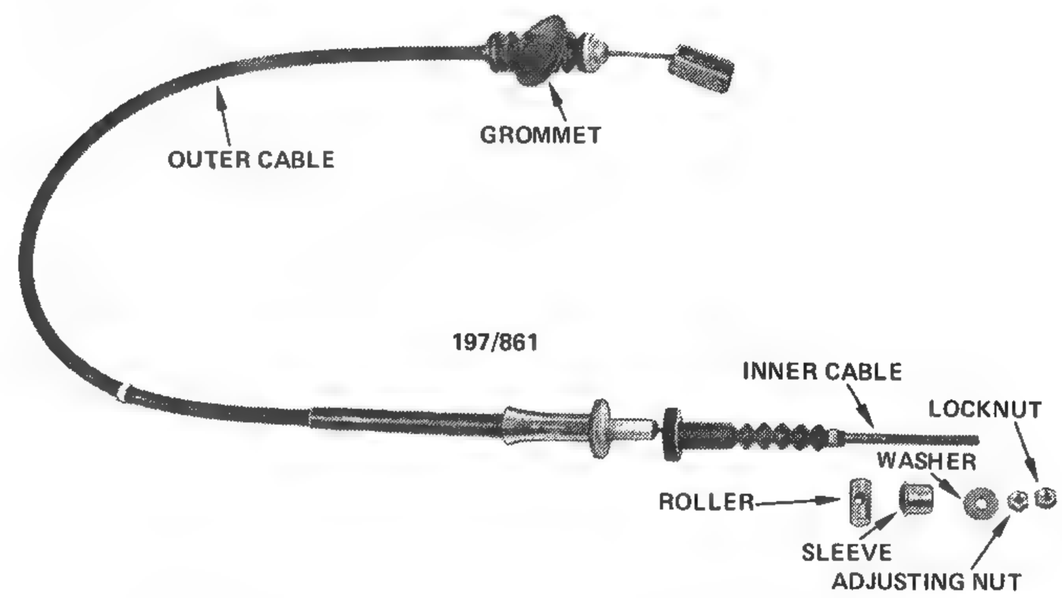

View of clutch cable and components.

(7) Remove the clip that retains the outer clutch cable to the bulkhead bracket, it may be necessary to push down the rubber grommet to gain access to the retaining clip.

(8) Remove the outer clutch cable from the bulkhead bracket.

(9) From inside the engine compartment remove the clutch cable assembly together with the rubber grommet from the bulkhead.

(10) Remove the clutch cable assembly from the vehicle.

(11) Inspect the inner and outer cable for wear and damage, check the inner cable for free movement. Renew the cable if necessary.

Installation is a reversal of the removal procedure with attention to the following points:

(1) Lubricate all moving parts with a universal chassis grease.

(2) When installing the rubber grommet to the bulkhead apply some body sealer to the inside groove on the grommet.

(3) Adjust the clutch pedal height and the release lever free play as described under Clutch Adjustments.

6. CLUTCH ADJUSTMENTS

TO ADJUST CLUTCH PEDAL HEIGHT

The dimension for the pedal height is measured horizontally from the bulkhead to the centre of the pedal pad.

When measuring, the floor covering and the sound insulating board should be pulled back.

Measure the pedal height and if adjustment is necessary, loosen the clutch cable lock and adjusting nuts at the clutch release lever so that the clutch pedal will not be held back by the clutch inner cable.

To adjust the pedal height loosen the locknut and turn the stop bolt in the required direction until the specified pedal height exists between the bulkhead and the centre of the pedal pad. Tighten the locknut on the stop bolt.

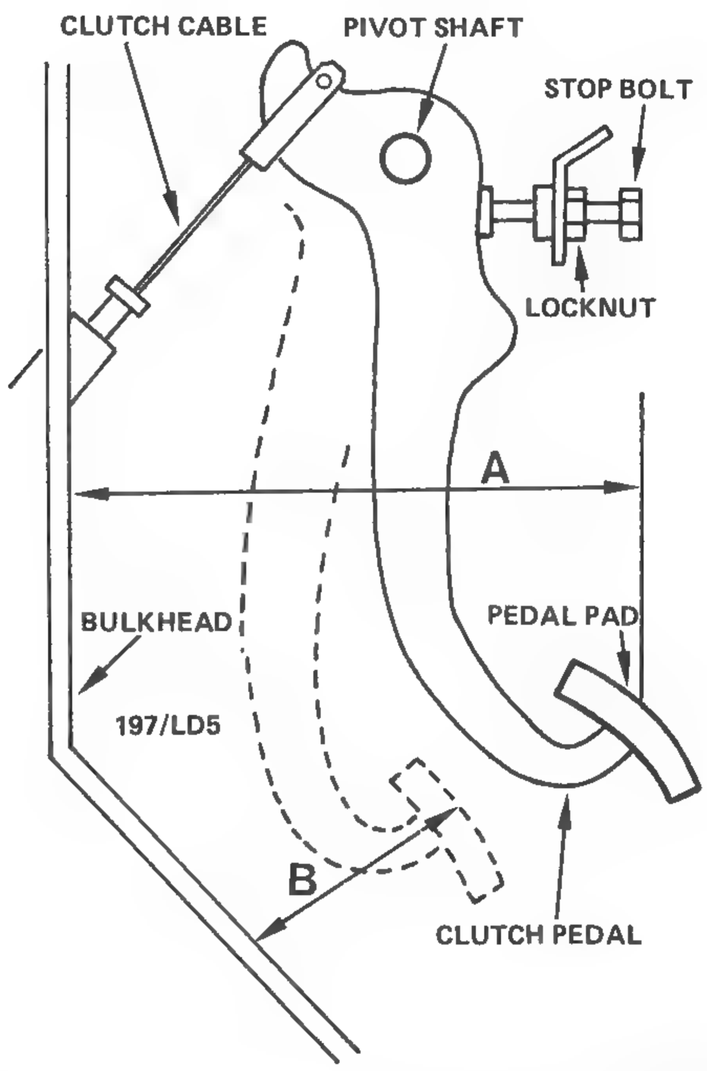

Illustration showing clutch pedal height measuring and adjusting points. Dimension A = 230 mm. Dimension B = 80 mm.

TO ADJUST PEDAL FREE TRAVEL AND RELEASE LEVER FREE PLAY

(1) Check and if necessary adjust the clutch pedal height.

(2) Lightly depress the clutch pedal by hand from the fully off position to the position where the clutch release bearing contacts the clutch diaphragm fingers. The free travel at the clutch pedal pad should be within Specifications.

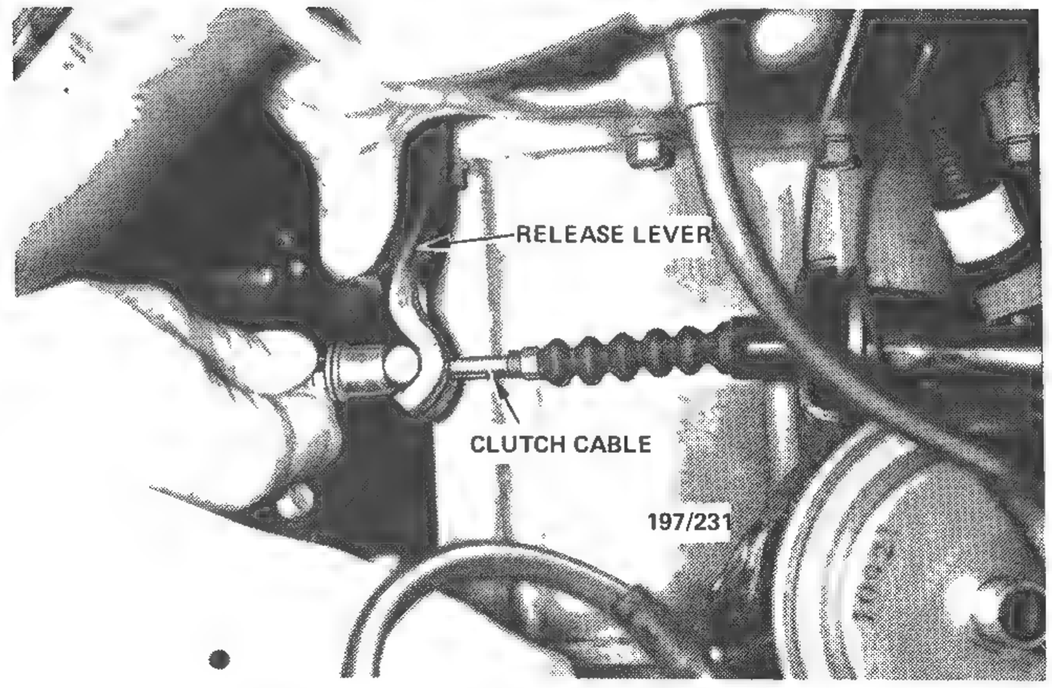

Checking the release lever free play.

If the free travel is outside Specifications, the clearance at the clutch release lever should be adjusted.

(3) Loosen the lock and adjusting nuts on the inner clutch cable at the clutch release lever.

(4) Turn the adjusting nut in the required direction to obtain the specified clearance between the cable roller and the clutch release lever.

(5) Operate the clutch pedal several times and recheck the pedal free travel.

(6) When satisfied that the free travel is correct, lock the adjusting nut with the locknut.

(7) With the pedal height and the pedal free travel adjusted correctly, the clutch should be disengaged when the clutch pedal is pushed down and the centre of the clutch pedal pad is a minimum of 80 mm away from the floor.

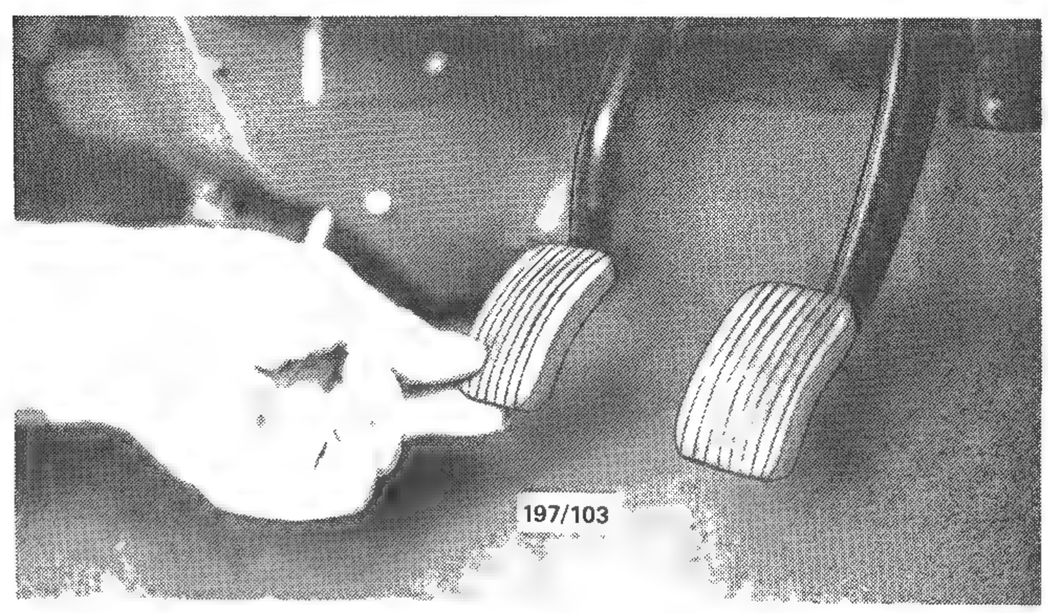

Checking the clutch pedal free travel.

SPECIFICATIONS

FOUR SPEED TRANSMISSION

Type ..... 4 speed synchromesh
Synchromesh ..... On all forward gears

Gear ratios:
- Fourth ..... 0.918 : 1
- Third ..... 1.290 : 1
- Second ..... 1.947 : 1
- First ..... 3.416 : 1
- Reverse ..... 3.214 : 1

FIVE SPEED TRANSMISSION

Type ..... 5 speed synchromesh
Synchromesh ..... On all forward gears

Gear ratios:
- Fifth ..... 0.775 : 1
- Fourth ..... 0.918 : 1
- Third ..... 1.290 : 1
- Second ..... 1.947 : 1
- First ..... 3.416 : 1
- Reverse ..... 3.214 : 1

DRIVE SHAFTS

Type of shaft ..... Front wheel drive, solid shaft

Type of joint:
- Differential side ..... Double offset, constant velocity, sliding
- Wheel side ..... Birfield, constant velocity, non sliding

TORQUE WRENCH SETTINGS

Starter motor bolts ..... 54 Nm

Transmission to engine bolts:
- 12 mm bolts ..... 93 Nm
- 14 mm bolts ..... 116 Nm

1. MANUAL TRANSMISSION AND DRIVE SHAFT TROUBLE SHOOTING

DIFFICULT GEAR CHANGE

(1) Faulty clutch or clutch release mechanism: Check and overhaul clutch or clutch release mechanism.

(2) Faulty gear lever assembly: Check and renew faulty components in gear lever assembly.

(3) Bent gear lever control rod: Renew the gear lever control rod.

(4) Worn or out of adjustment selector mechanism: Overhaul transmission and renew or adjust selector mechanism.

(5) Insufficient gear lever assembly lubrication: Check and lubricate gear lever assembly components.

(6) Faulty gear synchroniser mechanism: Check and overhaul transmission, renew faulty components as necessary.

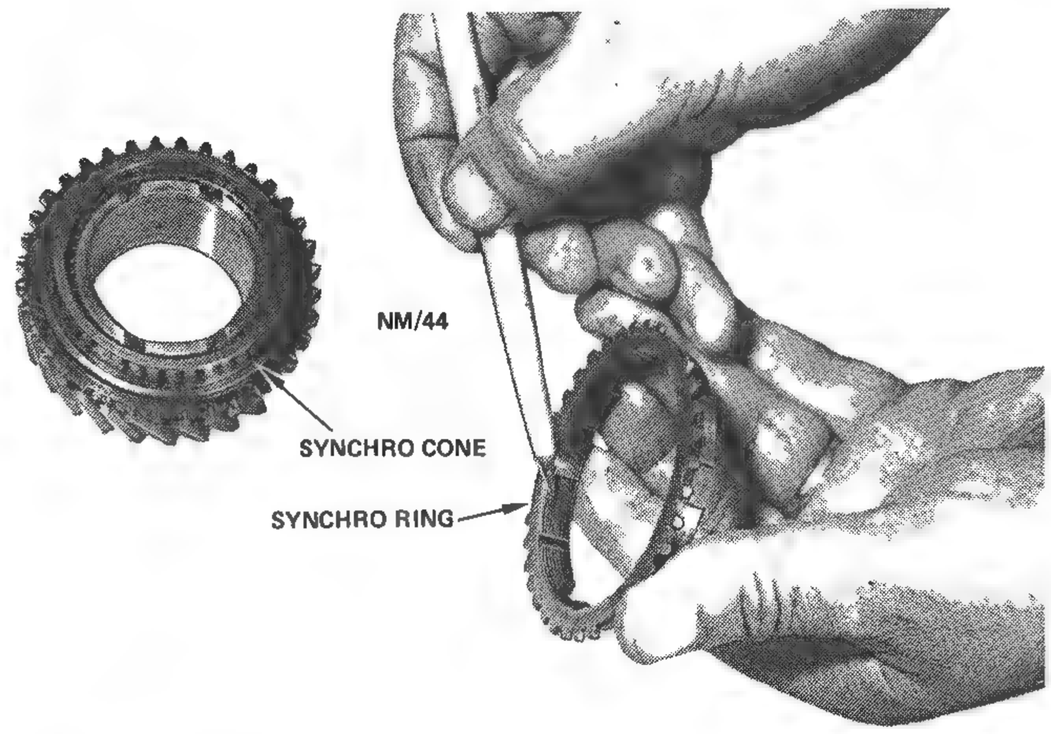

Check the friction surface of the synchro rings and cones for wear or damage.

(7) Broken or incorrect positioning of synchro shift plates or retaining springs: Check and overhaul transmission, renew components as necessary.

(8) Lubricating oil to heavy: Drain the transmission case and refill with the correct grade and quantity of oil.

> *NOTE: First check the clutch for correct operation. If reverse gear can be selected without any sign of gear 'clash' this is a fairly good indication that the clutch is operating normally.*
>
> *Also check that the correct type and viscocity oil is used in the transmission as this can also cause difficult gear changing.*

SLIPPING OUT OF GEAR

(1) Worn gear lever assembly bushes: Check and renew gear lever assembly components as necessary.

(2) Worn transmission front or rear bearings: Check and overhaul transmission, renew faulty components as necessary.

(3) Worn selector mechanism: Check and overhaul transmission, renew faulty components as necessary.

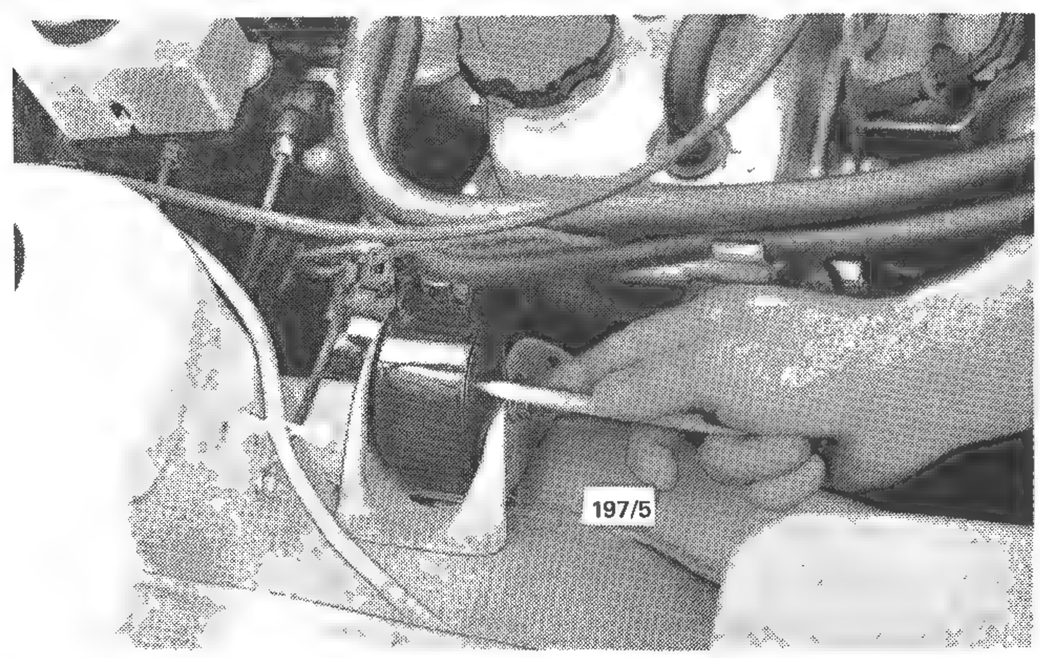

Check the engine mountings for damage and looseness.

NOTE: Check the engine mounting rubbers and mounting hardware, as vibrations caused by deteriorated mountings can also cause the transmission to slip out of gears.

TRANSMISSION LOCKED IN GEAR

(1) Worn or out of adjustment selector mechanism: Overhaul transmission and renew or adjust selector mechanism.

(2) Damaged or bent selector fork or forks: Overhaul transmission and renew faulty selector forks.

(3) Broken shift plates or broken retaining springs: Overhaul transmission and renew faulty components as necessary.

(4) Seizure of gear or gears: Overhaul transmission and renew faulty components as necessary.

TRANSMISSION NOISE (IN NEUTRAL)

(1) Lack of sufficient lubricant: Fill transmission with correct quantity and grade of lubricant.

(2) Worn transmission front bearing: Check and overhaul transmission, renew faulty components as necessary.

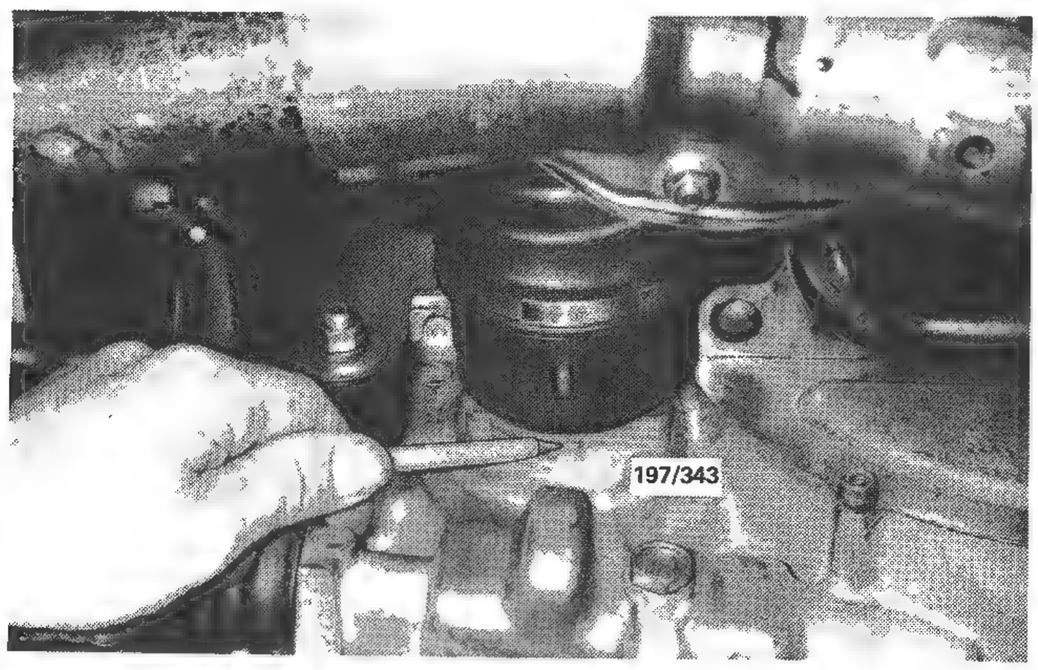

Check the drive shaft oil seals for leakage.

(3) Chipped or pitted constant mesh gears: Overhaul transmission and renew faulty components as necessary.

NOTE: First check lubricant level in transmission. To isolate transmission noise in neutral, run the engine, depress the clutch and engage any gear. If the noise ceases with the clutch depressed, this indicates that the noise is in the transmission.

TRANSMISSION NOISE (FORWARD GEARS ENGAGED, VEHICLE MOVING)

(1) Lack of sufficient lubricant: Fill transmission with correct quantity and grade of lubricant.

(2) Worn front or rear bearings: Check and overhaul transmission, renew faulty components as necessary.

(3) Chipped or pitted gears: Check and overhaul transmission, renew faulty components as necessary.

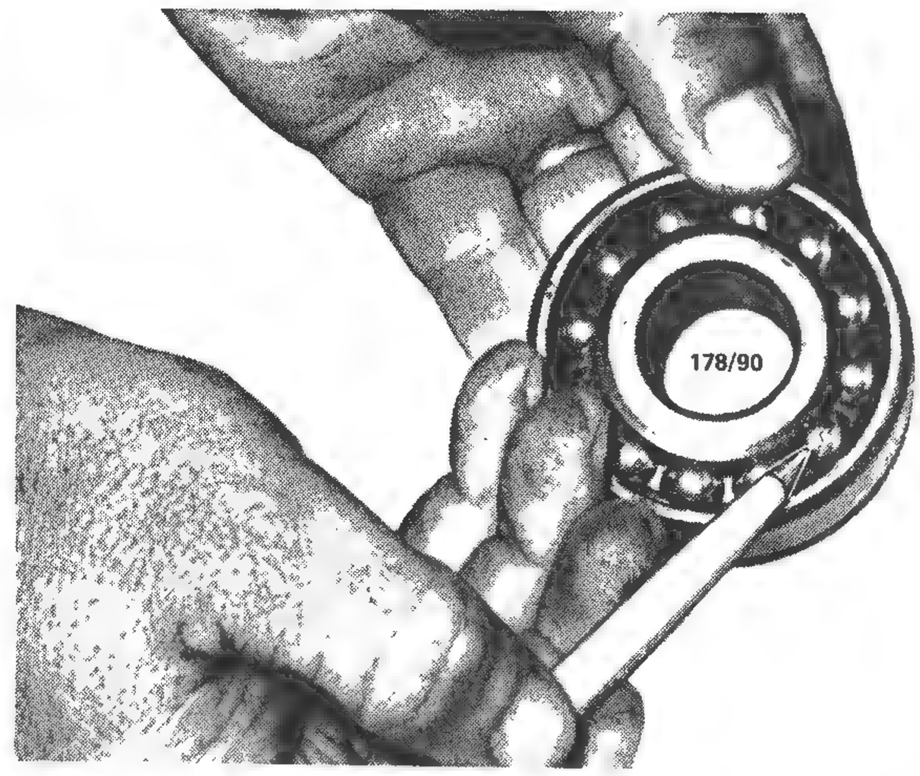

Check the bearings for pitting in the hardening of the balls and tracks.

GEAR CLASH ON CHANGING DOWN

(1) Faulty clutch or clutch release mechanism: Check and overhaul clutch or release mechanism.

(2) Faulty synchro rings and cones: Check and overhaul transmission, renew components as required.

(3) Worn primary shaft bearings: Overhaul transmission and renew faulty components as necessary.

(4) Excessive wear on secondary shaft or gears: Overhaul transmission and renew faulty components as necessary.

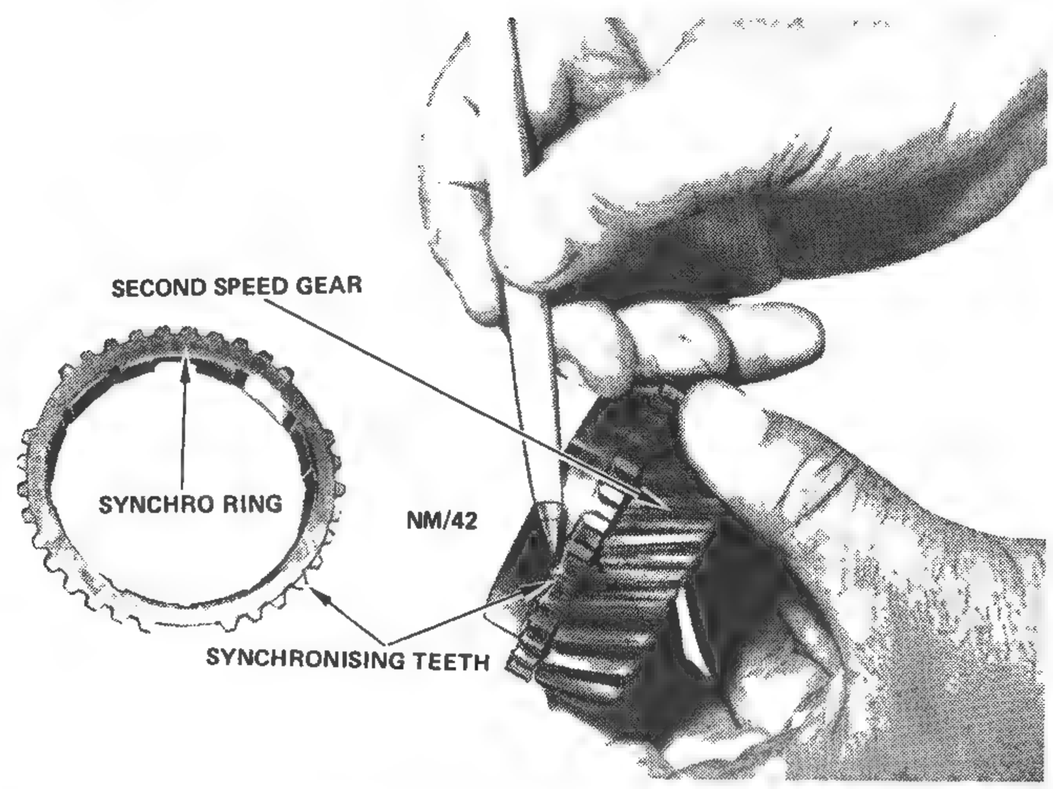

Check the synchronising teeth on the gears and synchro rings for chipping or wear.

NOTE: Check lubricant level in transmission before dismantling transmission.

DRIVE SHAFT VIBRATION

(1) Bent drive shaft: Renew drive shaft.

(2) Damaged or missing dynamic damper: Renew dynamic damper.

(3) Wear in constant velocity joint: Check and renew faulty components or drive shaft as an assembly.

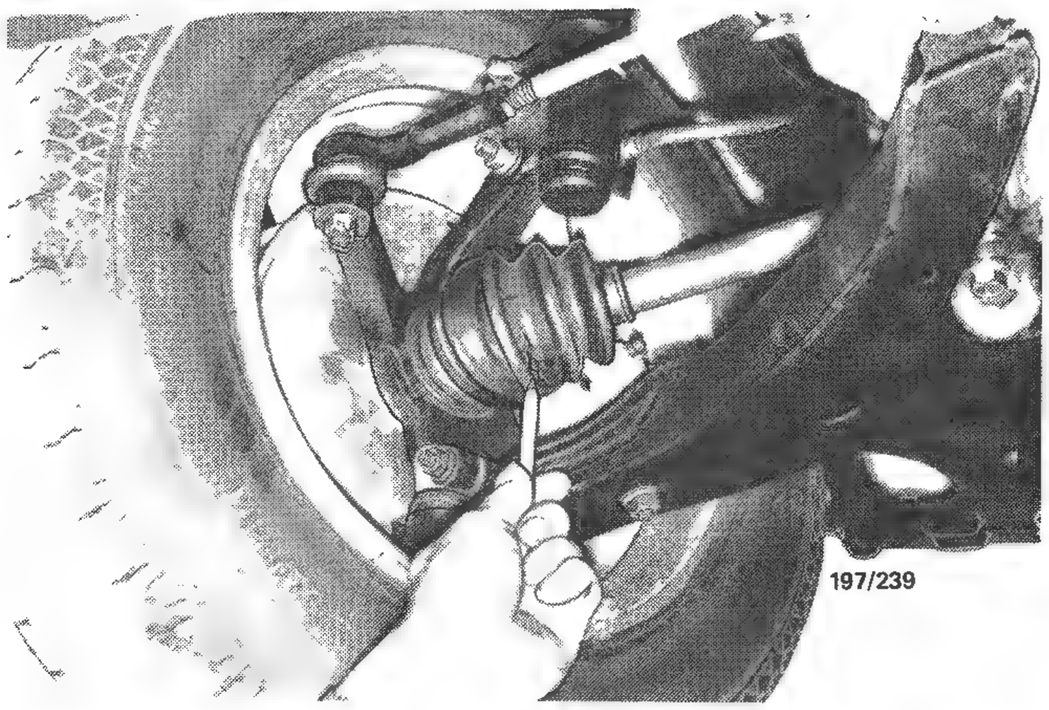

Check the drive shaft dust boot for damage and deterioration.

DRIVE SHAFT NOISE

(1) Dry or worn constant velocity joint: Check and renew faulty components or drive shaft as an assembly.

(2) Loose or faulty front hub bearings: Check and tighten or renew hub bearings.

(3) Loose drive shaft hub nut: Tighten nut to specified torque.

(4) Worn splines on drive shaft or C.V. joint inner race: Check and renew faulty components or drive shaft as an assembly.

2. DESCRIPTION

The four and five speed transmissions used in this range of vehicles have synchromesh on all forward gears and all constant mesh gears are helical cut.

First, second, third and fourth gears are common to both transmissions, as is the reverse gear which is selected by sliding a spur type idler gear into mesh with the primary and secondary shaft gears.

On five speed transmissions, the primary shaft is extended to allow a fifth gear to be positioned in the rear cover. The secondary shaft is also machined to accept the fifth gear and synchro assembly.

Tapered roller bearings are installed to support the primary and secondary shafts in the transmission case.

The transmission and differential assemblies are accomodated in the same case. The same oil is used and the one oil level check covers both assemblies. Oil leakage is prevented by a liquid sealing compound applied to the mating surfaces of each transmission case component. Oil seals are fitted where the drive shafts enter the transmission case.

Gear selection is by three selector forks which are secured to selector shafts. The selector shafts are operated by a floor mounted gear lever assembly via a control rod through an interlock/selector mechanism assembly. The gear lever assembly is stabilised with a stay bar.

Each drive shaft has a constant velocity joint at each end of the shaft. The differential side is the sliding type, the wheel side is the non-sliding type. The C.V. joint comprises of an outer housing, an inner race and a ball cage containing six steel balls. The bore of the inner race is splined to the drive shaft and is retained by a snap ring. The outer housing has six ground mating grooves for the balls.

The differential side C.V. joint can be dismantled and be serviced, however if any component of the C.V. joint is worn or damaged the complete joint will have to be renewed. The wheel side C.V. joint cannot be dismantled, but the dust boot can be renewed after dismantling the differential side C.V. joint. If any component of the wheel side C.V. joint is worn or damaged the C.V. joint and shaft need to be renewed as an assembly.

NOTE: As extensive knowledge and specialised equipment is required to overhaul the manual transmission assembly and with the cost of the equipment normally exceeding the repair charges of a transmission specialist, the transmission overhaul is therefore not a worthwhile repair proposition for the person who has limited knowledge and does not have the required special tools.

If the transmission must be removed for clutch overhaul or flywheel ring gear renewal or if the transmission is to be replaced by a reconditioned unit the removal and installation procedures are described later in this section.

3. MANUAL TRANSMISSION

DRIVE SHAFT OIL SEAL

To Renew

(1) Raise the front of the vehicle, support it on chassis stands and remove the road wheel.

(2) Remove the bolts that retain the splashguards to the crossmember and body frame and remove the splashguards.

(3) Remove the drive shaft from the vehicle as described later in this section.

(4) Prise the oil seal out of the transmission hous-

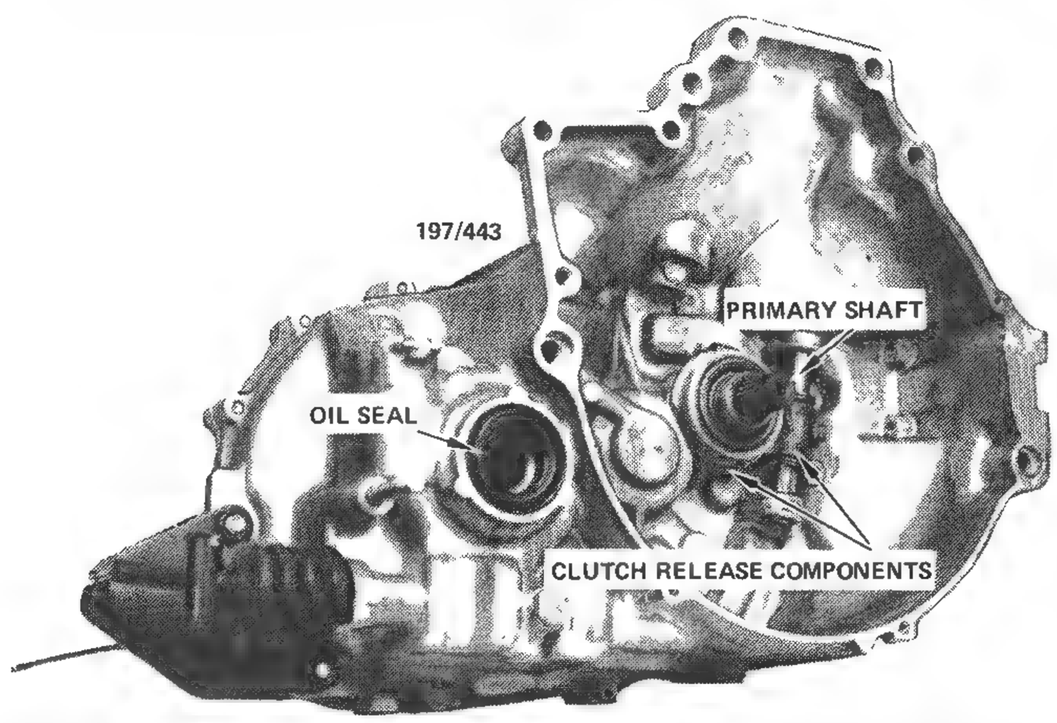

Right hand side view of manual transmission showing right hand side drive shaft oil seal.

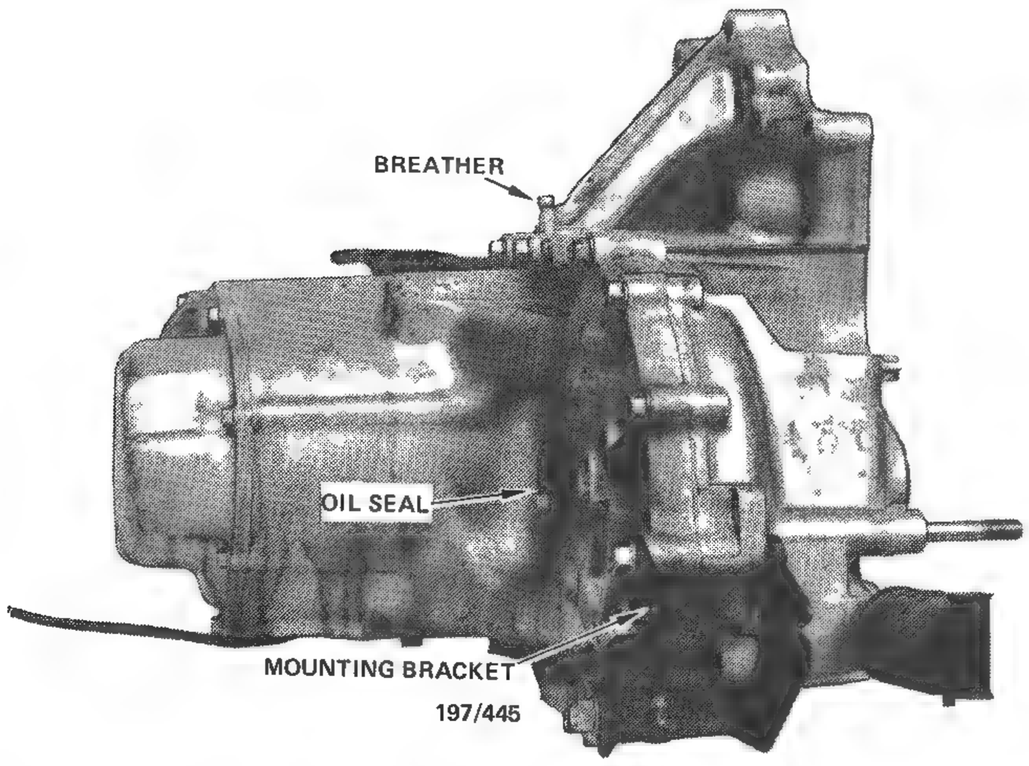

Rear view of manual transmission showing left hand side drive shaft oil seal.

ing, taking care not to damage the transmission housing or the oil seal seat.

Installation is a reversal of the removal procedure with attention to the following points:

(1) Prior to installing the new oil seal ensure that the oil seal seat is free from any burrs or nicks and is clean.

(2) Coat the outer surface of the new seal lightly with a sealing compound and lubricate the seal lip with clean transmission oil.

(3) Instal the new oil seal loosely into the transmission housing and ensure that the lip of the seal is facing towards the differential side bearing.

(4) Using a suitable tubular drift tap the oil seal squarely into the transmission housing.

(5) Instal the drive shaft assembly as described later in this section. Ensure that the open end of the drive shaft snap ring is uppermost and that the drive shaft is entered squarely through the oil seal.

(6) Instal the front suspension components, refer to the Front Suspension section if necessary and refill the transmission with the recommended grade and quantity of transmission oil.

TRANSMISSION ASSEMBLY

To Remove and Instal

(1) Raise the engine bonnet and fit fender covers to both front fenders.

(2) Disconnect the battery negative lead from the battery.

(3) Disconnect the speedometer cable from the transmission.

(4) Loosen the clutch cable locknut and adjusting nut at the clutch release lever and disconnect the clutch cable from the release lever. Remove the clutch cable support brackets.

(5) Remove the wiring harness retaining clips from the top of the transmission and place the harness away from the working area.

(6) Disconnect the wires from the starter motor

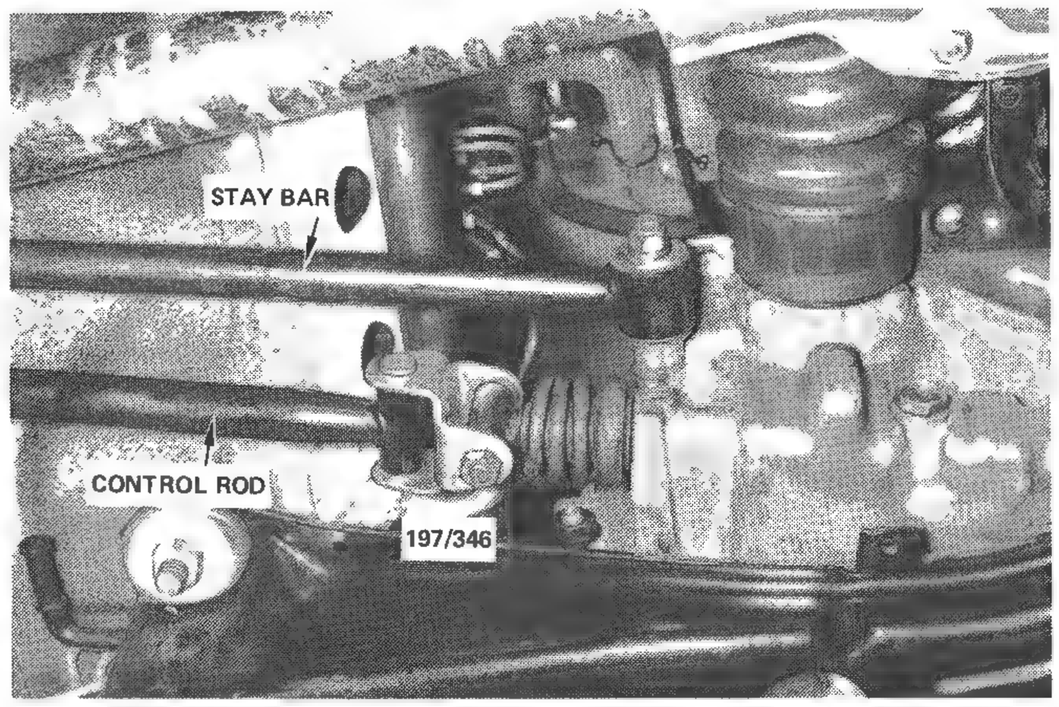

Installed view of control rod and stay bar. Transmission end.

solenoid. Remove the starter motor retaining bolts and withdraw the starter motor from the vehicle.

(7) Raise the front of the vehicle, support it on chassis stands and remove both the front wheels.

(8) Remove the bolts retaining the splash guards to the crossmember and the body frame. Remove the splash guards from the vehicle.

(9) Using a suitable drain tin, drain the transmission oil from the transmission.

(10) Withdraw the drive shafts from the transmission as described later in this section.

(11) Where applicable, remove the stabiliser bar from the vehicle. Refer to the Front Suspension section if necessary.

(12) Support the engine on a suitable jack with a block of wood between the sump and the jack head to protect the sump.

(13) Slightly raise the engine, enough to take the weight off the engine mountings.

(14) Remove the nut and washers retaining the gear lever assembly stay bar to the transmission and slide the stay bar off the stud.

(15) Remove the nut and washer from the gear lever assembly control rod retaining bolt, at the transmision end, and withdraw the retaining bolt.

(16) Disconnect the reverse lamp switch wire at the connector.

(17) Remove the nut and washers retaining the front engine mounting to the crossmember.

(18) Remove the bolts retaining the front engine mounting assembly to the transmission. Remove the engine mounting assembly.

(19) Remove the nut and washer retaining the rear engine mounting to the transmission bracket.

(20) Remove the crossmember retaining bolts and washers and remove the crossmember from the vehicle.

(21) Support the transmission with a jack and remove the bolts retaining the transmission to the engine assembly. Withdraw the transmission from the engine assembly and remove it from the vehicle.

Installation is a reversal of the removal procedure with attention to the following points:

(1) Ensure that the splines on the primary shaft are lightly lubricated with a suitable grease.

(2) Instal the transmission ensuring that its weight is not carried on the clutch driven plate.

(3) Check that there are no cables or wires caught between the engine assembly and the transmission.

(4) Ensure that all cable clamps and support brackets are installed to their original positions and all mounting bolts and nuts are firmly secured.

(5) Tighten the transmission drain plug securely and refill the transmission with the correct grade and quantity of lubricant.

GEAR LEVER ASSEMBLY

To Remove

(1) Raise the front of the vehicle and support it on chassis stands.

(2) Remove the gear lever knob by unscrewing it from the gear lever.

(3) With a suitable screwdriver, pry under the centre console upper plate, starting at the rear and unclip the upper plate. Remove the upper plate and grommet.

(4) Working beneath the vehicle, remove the nut, the washer and the bolt retaining the gear lever control rod to the transmission. Suitably mark the control rod, to ensure that it is returned to its original position and disconnect the control rod from the transmission.

(5) Remove the nut and washers retaining the gear lever assembly stay bar to the transmission and slide the stay bar off the stud.

(6) Working inside the vehicle, remove the hooked section of the gear lever retaining spring from the groove in the gear lever bracket and manoeuvre the retaining spring from the gear lever bracket.

(7) Remove the gear lever from the gear lever bracket.

(8) Remove the nuts and washers retaining the gear lever bracket to the floor.

(9) With an assistant supporting the gear assembly beneath the vehicle, depress the two rubber lugs on the side of the gear lever bracket inwards and remove the gear lever assembly from the underside of the vehicle.

(10) Remove the following components from the gear lever assembly for inspection: The control rod, the gear lever ball upper seat, the dust boot and holder, the guide plate and the gear lever lower seat.

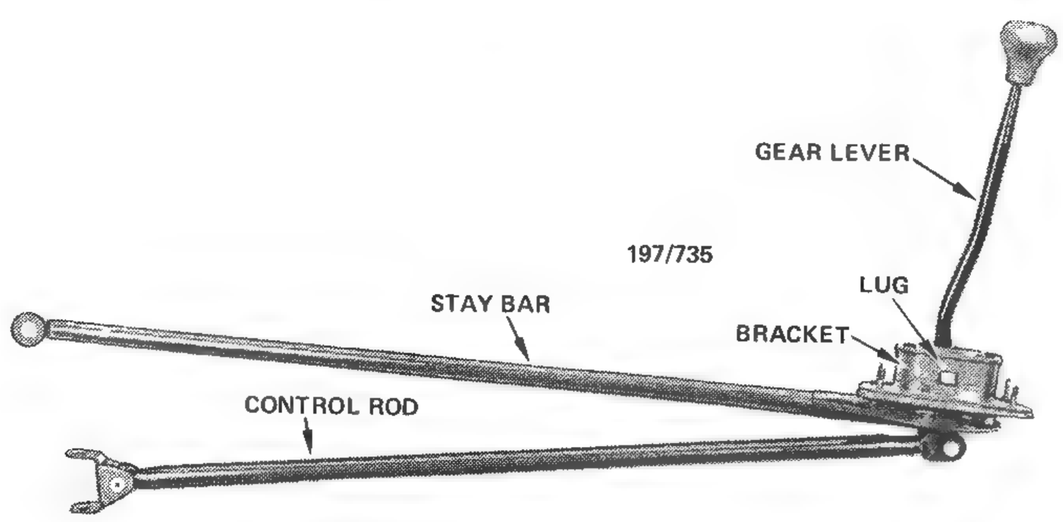

Assembled view of gear lever assembly.

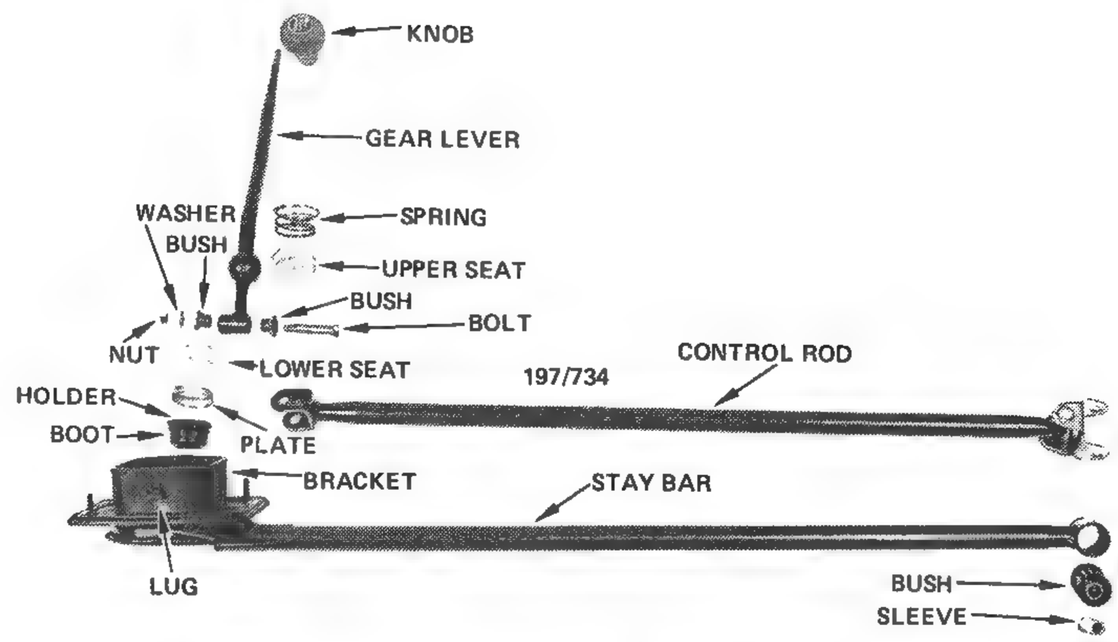

Dismantled view of gear lever assembly.

To Clean and Inspect

(1) Wash all components in cleaning solvent and blow dry.

(2) Check the gear lever bracket for damage or wear.

(3) Check the control rod bushes, the gear lever lower bushes and the upper and lower ball seats for wear and cracking.

(4) Check the gear lever retaining spring for fatigue.

(5) Check the insulator rubber and grommet for damage and deterioration.

(6) Repair or renew any faulty components.

To Instal

Installation is the reversal of the removal procedure with attention to the following points:

(1) Lubricate the gear lever lower and upper ball seats and bushings with a universal chassis grease prior to installation.

(2) Ensure that the gear lever retaining spring hooked end is securely hooked into the gear lever bracket groove.

4. DRIVE SHAFTS

TO REMOVE

(1) Loosen the front road wheel retaining nuts.

(2) Raise the front of the vehicle and support it on chassis stands.

(3) Using a hammer and suitable punch, release the tab retaining the hub nut and, with the aid of an assistant applying the brakes, loosen the hub nut.

(4) Remove the bolts retaining the splashguards to the crossmember and the body frame. Remove the splashguards from the vehicle.

(5) Using a suitable drain tin, drain the transmission oil. Instal and tighten the drain plug after the transmission has fully drained.

(6) Remove the front road wheel retaining nuts and remove the road wheel.

(7) Where applicable, remove the stabiliser bar

link from the suspension control arm. Refer to the Front Suspension section if necessary.

(8) Remove the pinch bolt retaining the suspension control arm ball joint to the steering knuckle.

(9) Disconnect the control arm ball joint from the steering knuckle by pushing the control arm downwards, away from the working area.

(10) To withdraw the drive shaft from the transmission and disengage the drive shaft snap ring from the differential side gear, apply a firm hold on the disc and caliper assembly and with a sharp jerking pull withdraw the drive shaft.

NOTE: If difficulty is experienced in withdrawing the drive shaft using the above method, a suitable wedge shaped tool may be used between the drive shaft and the transmission and tapping the tool lightly with a hammer. Take care however not to damage the drive shaft oil seal in the transmission housing.

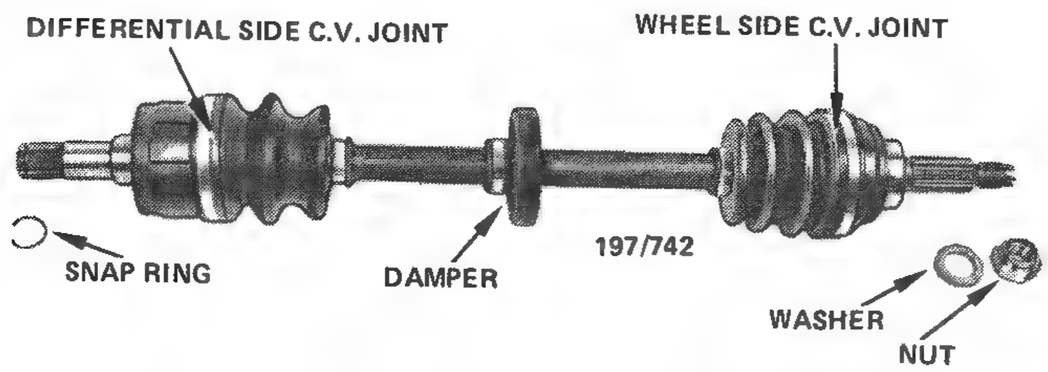

Assembled view of right hand side drive shaft.

(11) Remove the front hub retaining nut and washer.

(12) Push the drive shaft out of the front hub and steering knuckle, ensuring that no damage is done to the steering knuckle seal.

NOTE: Drive shaft and joints should be held in a horizontal position during withdrawal. The joints should not be bent beyond their normal operating angle as damage will result to the joints and the protective boots.

TO DISMANTLE

(1) Place the drive shaft in a vice with the vice jaws protected.

(2) Remove the dust boot retaining clips and slide the dust boot towards the centre of the drive shaft. Discard the retaining clips.

(3) Push the joint to one side and with a suitable tool prise the snap ring from the rear of the outer housing.

(4) It is important that the inner ball race, ball cage and outer housing are reassembled to their original positions, therefore mark each individual part in relation to each other and mark the position of the inner ball race in relation to the drive shaft.

(5) Grasp the outer housing and pull it off the ball cage, a gentle tap with a soft hammer may be needed.

(6) Remove the snap ring retaining the inner ball race to the drive shaft and remove the inner ball race and ball cage from the drive shaft.

(7) Remove the ball cage and ball assembly from the inner ball race and finger press the balls out of the ball cage.

(8) Remove the dust boot from the drive shaft.

(9) Where applicable, mark the position of the dynamic damper in relation to the drive shaft.

(10) Remove the dynamic damper retaining clip and remove the dynamic damper from the drive shaft.

(11) If necessary, remove and discard the clips retaining the wheel side C.V. joint dust boot and withdraw the boot over the drive shaft.

TO CLEAN AND INSPECT

(1) Wash all components in a suitable cleaning solvent and blow dry with compressed air.

(2) Inspect the ball contact faces on the inner ball races and the outer housings for pitting and wear.

(3) Inspect the ball cages and balls for wear and damage.

(4) Check the dust boots for damage and deterioration.

(5) If any components except the dust boots, which can be serviced separately, are worn or damaged, renew the differential side C.V. joint or drive shaft as an assembly.

TO ASSEMBLE

Assembly is a reversal of the dismantling procedure with attention to the following points:

(1) Thoroughly pack the C.V. joints with molybdenum disulfide grease and instal the wheel side C.V. joint dust boot. Refer to the relevant illustration for the correct type.

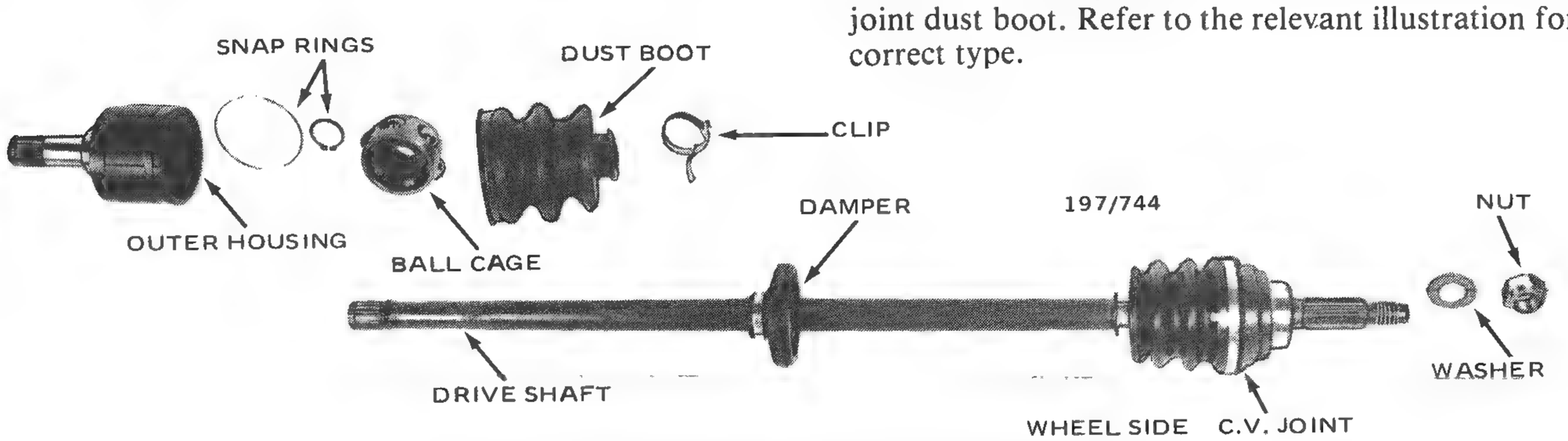

View of right hand side drive shaft and components.

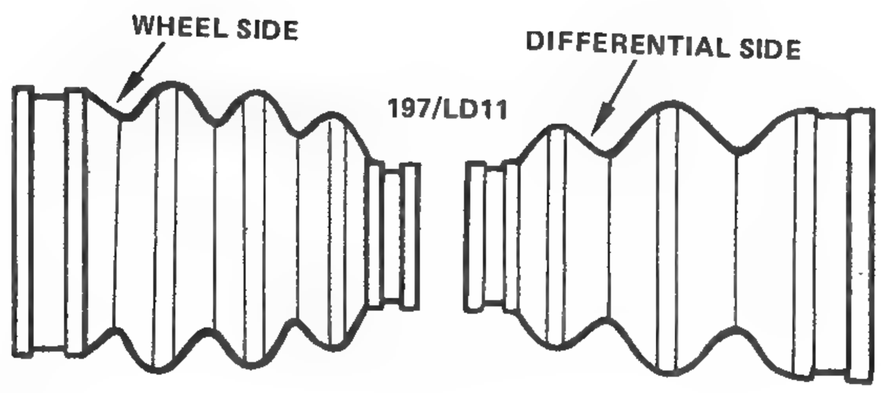

Illustration showing the difference between the C.V. joint dust boots.

NOTE: If a new C.V. joint assembly is installed use the grease that is supplied with the package.

(2) Where applicable, instal the dynamic damper to its marked position on the drive shaft with its flat side facing the wheel side C.V. joint. Retain the dynamic damper in position using a new retaining clip.

NOTE: If no markings are available, do not secure the dynamic damper at this stage.

(3) Instal the C.V. joint dust boot ensuring that the correct type of dust boot is installed to the correct side of the drive shaft.

NOTE: The difference between the wheel side C.V. joint dust boot and the differential side C.V. joint dust boot is that the differential side dust boot is slightly longer than the wheel side dust boot and the wheel side dust boot is made up of 4 convolutions whilst the differential side dust boot is made up of 3 convolutions.

(4) Position the inner ball race inside the ball cage, with the chamfered end of the ball race toward the small end of the ball cage.

(5) Press the balls firmly into the ball cage, ensuring that the balls are fully seated.

(6) Instal the ball cage and inner ball race assembly onto the drive shaft with the small end of the ball cage towards the centre of the drive shaft.

(7) Instal the snap ring retaining the inner ball race to the drive shaft.

(8) Thoroughly pack the C.V. joint outer housing and the ball assembly with molybdenum disulfide grease and instal the C.V. joint outer housing over the ball assembly.

(9) Instal the C.V. joint outer housing snap ring, ensuring that the snap ring is correctly seated in its locating groove.

(10) Slide the large end of the C.V. joint dust boot over C.V. joint housing. Ensure the ends of the dust boot are correctly positioned in the drive shaft groove and in the C.V. joint groove respectively.

(11) Secure both ends of the dust boots with new retaining clips ensuring that the clip tabs are pressed against the boot opposite the direction of rotation.

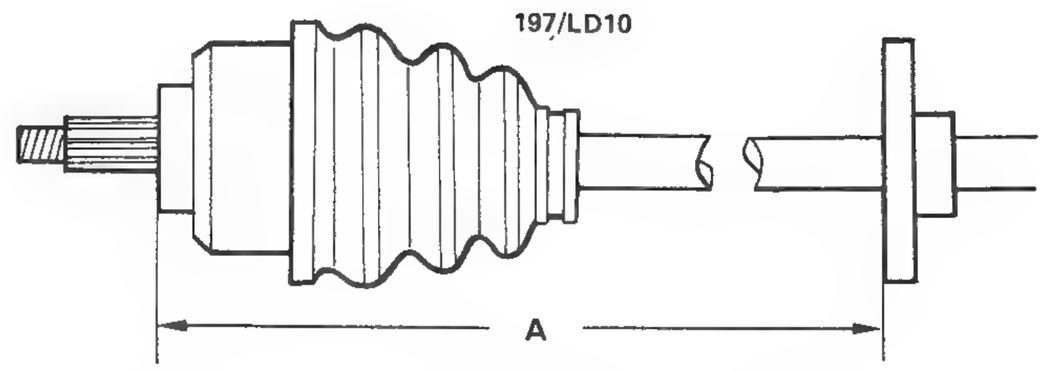

Illustration showing the correct distance between the wheel side C.V. joint and the dynamic damper. Distance A = 367 mm ± 2 mm. Right hand drive shaft only.

(12) To determine the correct position of the dynamic damper on the right hand side drive shaft, measure a distance of 367 mm ± 2 mm from the outer surface of the wheel side C.V. joint along the drive shaft axis.

(13) Position the plain side of the dynamic damper at the end of this distance. Secure the position of the dynamic damper with a new retaining clip.

TO INSTAL

Installation is a reversal of the removal procedure with attention to the following points:

(1) Instal the snap ring to the differential end of the drive shaft and position the open end of the snap ring uppermost.

(2) Instal the drive shaft assembly to the front hub and instal a new front hub retaining nut loosely.

(3) With the help of an assistant pull the front hub outwards and instal the differential side of the drive shaft to the differential in a horizontal line.

NOTE: It is most important that this is done with extra care as entering the drive shaft at an angle will damage the drive shaft oil seal and will make engagement of the drive shaft snap ring into the differential side gear difficult.

(4) Ensure that the drive shaft snap ring fully engages the differential side gear.

NOTE: The drive shaft snap ring can be heard to engage with the differential side gear during installation.

(5) Instal the front suspension components. Refer to the Front Suspension section, if necessary.

(6) Tighten the front hub retaining nut to the specified torque and, with a suitable blunt tool, caulk its tab into the drive shaft groove. Ensure that the front hub can be turned freely.

(7) Refill the transmission assembly with the recommended grade and quantity of transmission oil.

SPECIFICATIONS

Make	Jatco F3A
Type	3 forward speeds and reverse, epicyclic gear train with torque converter
Operation	Automatic hydraulic
Band adjustment	Tighten adjusting screw to 12–15 Nm and back off two turns and secure lock nut

TORQUE WRENCH SETTINGS

Drive plate to crankshaft bolts	93 Nm
Drive plate to torque converter bolts	49 Nm
Starter motor bolts	54 Nm
Converter housing to engine bolts:	
12 mm bolts	93 Nm
14 mm bolts	117 Nm
Brake band adjusting screw lock nut	40 Nm
Oil pan bolts	8 Nm

1. AUTOMATIC TRANSMISSION TROUBLE SHOOTING

NOTE: The following transmission faults can be caused by conditions that may be rectified within the scope of the information given in this section.

NO DRIVE IN D RANGE

(1) Low fluid level in transmission: Check fluid level in transmission and top up if necessary.

(2) Incorrectly adjusted selector rod: Check and adjust selector rod as detailed.

(3) Incorrect or contaminated transmission fluid in unit: Drain and refill with recommended grade of fluid.

NOTE: Check out the possible causes in the order given.

NO REVERSE DRIVE IN R ON QUADRANT

(1) Low fluid level in transmission: Check fluid level in transmission and top up if necessary.

(2) Incorrectly adjusted selector linkage: Check and adjust selector linkage.

SLIPPING OR ROUGH IN UPSHIFT

(1) Incorrectly adjusted selector linkage: Check and adjust selector linkage.

(2) Low fluid level in transmission: Check fluid level and top up if necessary.

(3) Faulty vacuum modulator or vacuum lines: Check out vacuum modulator and vacuum lines.

NO TRANSMISSION KICKDOWN

(1) Incorrectly adjusted accelerator cable or linkage: Check and adjust cable as detailed in the Fuel System section.

(2) Incorrectly adjusted kickdown switch or solenoid: Check and renew or adjust kickdown switch or solenoid as detailed.

NOTE: Check and adjust the accelerator cable and linkage before adjusting the kickdown switch.

ENGINE WILL NOT START IN P OR N POSITIONS OR WILL START IN ANY RANGE

(1) Neutral safety switch faulty: Renew neutral safety switch.

(2) Incorrectly adjusted selector linkage: Check and adjust selector linkage as detailed.

2. DESCRIPTION

The automatic transmission combines a fluid coupling or torque converter with a fully automatic three speed epicyclic gear system.

The transmission provides three forward ratios and one reverse. The hydraulic system consists of a single rear pump and valve arrangement.

There are two final drive gear train ratios available, 3.94:1 for the 1.3 litre engine and 3.63:1 for the 1.5 litre engine.

The final drive gear train or differential and the transmission use a common lubricant. The transmission oil pan and the final drive drain plug will have to be removed to drain the assembly completely. Topping up or refilling is done through the speedometer driven gear opening.

The gear selector lever is floor mounted and connected to the transmission by an adjustable linkage. The selector quadrant adjacent to the base of the lever is marked P,R,N,D,2,1.

It is necessary for the selector lever to be in the N or P position before the engine can be started.

When testing or tuning the engine the handbrake must be firmly applied and the selector lever must be in the P position, otherwise the vehicle could move forward or backward as the engine speed is increased.

For long distance towing the vehicle should be towed

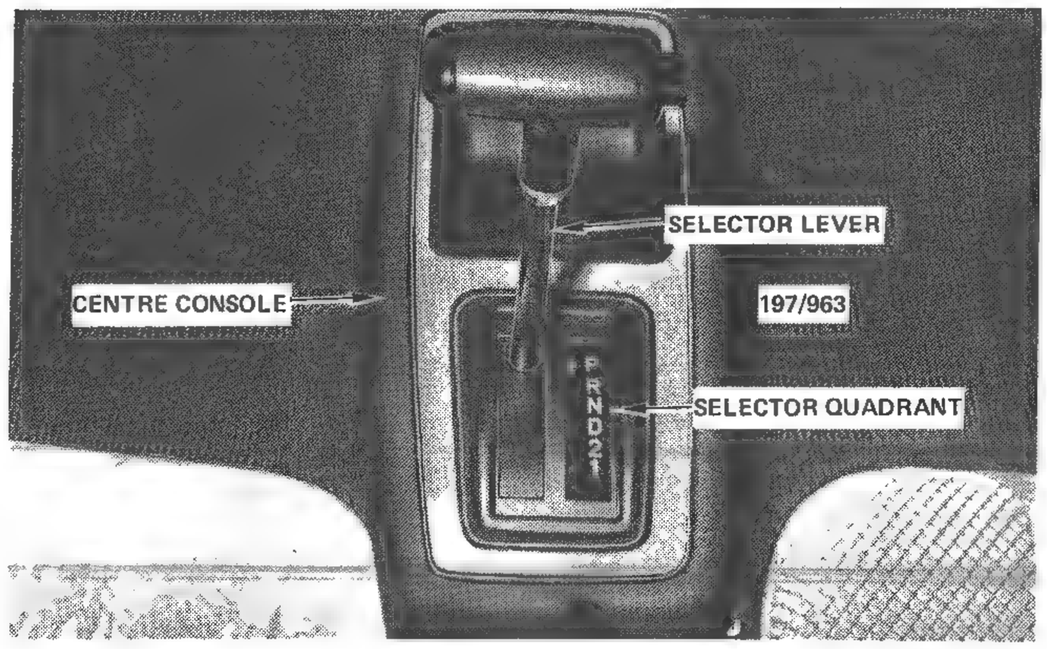

Installed view of centre console and selector lever.

with the front end of the vehicle raised. The vehicle may be towed for distances less than 80 kilometres at a speed not above 56 km/h if the cause for which the vehicle is being towed is not within the transmission assembly. Tow the vehicle in a forward direction only.

It is not possible to start the engine by either pushing or towing the vehicle.

The transmission can be removed from the vehicle without engine removal.

NOTE: As extensive knowledge and equipment is required to overhaul the automatic transmission assembly, it is therefore not a worthwhile repair proposition for the average person. However, if the transmission must be removed for overhaul by a specialist, or to be replaced with a reconditioned unit, the removal and installation procedure is fully described at the end of this section.

3. TRANSMISSION FLUID.

Only the recommended automatic transmission fluid should be used in the transmission when topping up or changing the fluid in the system. See Specifications in the Lubrication and Maintenance section.

The fluid level in the transmission should be checked at regular intervals of not greater than 10,000 km or 12 months, also check the fluid level at each chassis lubrication.

TO CHECK AND TOP UP

(1) Place the vehicle on a level floor and open the engine bonnet.

NOTE: When working on the automatic transmission, cleanliness is an absolute must. Do not reuse transmission fluid and do not allow foreign matter to enter the filler opening.

(2) Clean around the top of the dipstick tube and around the speedometer driven gear location to ensure that no dirt or foreign matter can enter the dipstick tube or the speedometer driven gear opening.

(3) Place the selector lever in the P position on the selector quadrant and firmly apply the handbrake.

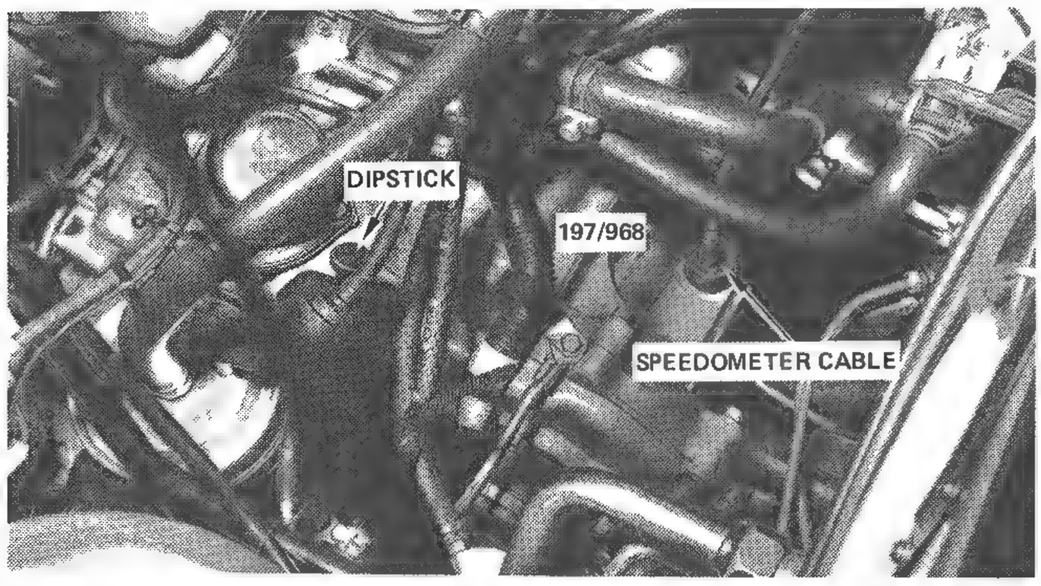

Installed view of the transmission showing the dipstick and speedometer cable location.

197/LD14

Transmission fluid dipstick. Fluid level should be between the 'F' and 'L' markings shown.

(4) Start and run the engine at normal idle speed, if the engine is cold run the engine at fast idle speed, to bring the engine and transmission assembly to normal operating temperature.

NOTE: As an alternative to operation (4) run the vehicle on the road for approximately eight kilometres.

(5) Return the engine to the correct idling speed and move the selector lever through all ranges several times. Return the selector lever to the P position.

(6) Withdraw the transmission dipstick and wipe the dipstick on a piece of lint free cloth.

(7) With the engine still running, insert the dipstick fully into the dipstick tube, withdraw the dipstick and check the fluid level. The fluid level should be between the F and L mark on the dipstick.

(8) If the fluid level is low, stop the engine and remove the speedometer cable from the speedometer driven gear on top of the transmission. Remove the bolt retaining the speedometer driven gear to the transmission and remove the speedometer driven gear. Top up the transmission with the recommended grade of transmission fluid through the speedometer gear opening.

(9) Instal the speedometer driven gear and the speedometer cable, start the engine and recheck the level.

NOTE: Do not overfill the transmission or foaming and unsatisfactory operation of the transmission will result.

TO DRAIN AND REFILL

This is not a normal maintenance and lubrication procedure. It is only necessary to drain the complete system, including the torque converter and the fluid cooler, when the transmission assembly is removed for overhaul or the renewal of transmission components such as bearings, clutches or assemblies. When this condition arises, the torque converter and the cooler should be cleaned and flushed to remove any dirt or sludge.

After transmission overhaul, instal approximately 5.7 litres of new recommended grade transmission fluid, then top up as previously described.

4. BRAKE BAND

Special Equipment Required:
To Adjust – Small torque wrench

TO ADJUST

(1) Open the engine bonnet and fit fender covers to both front fenders.

(2) Slacken the locknut on the band adjusting

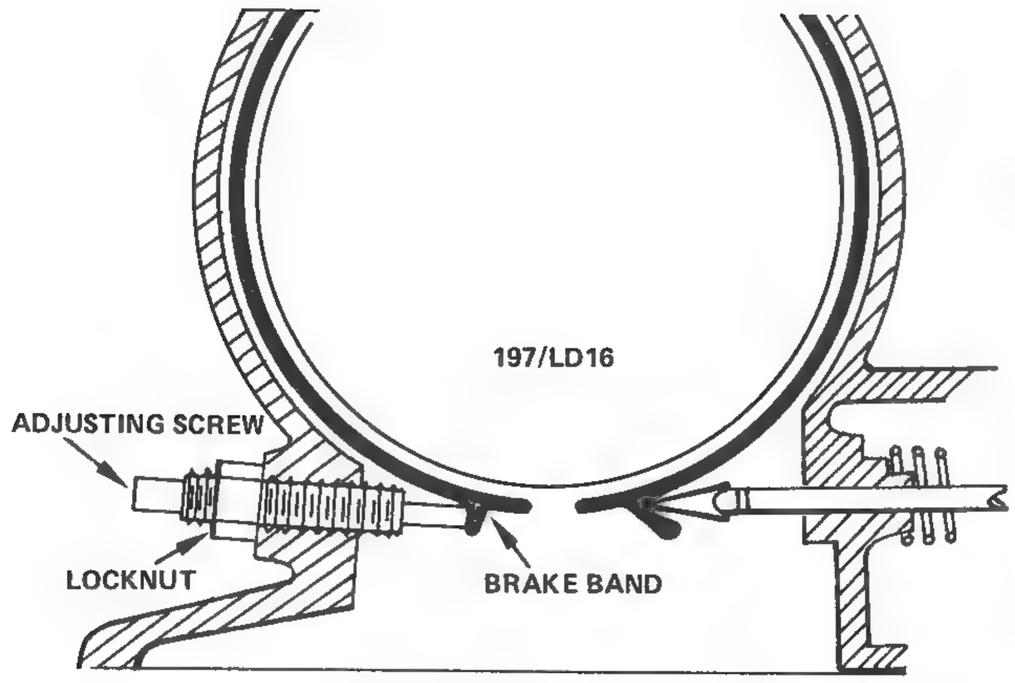

Location of the brake band adjusting screw is towards the rear of the transmission on the radiator side.

screw several turns and then back off the adjusting screw a few turns.

(3) Using a suitable torque wrench, tighten the band adjusting screw to a torque of 12–15 Nm and then back off the screw two full turns.

(4) Hold the adjusting screw stationary and tighten the locknut to a torque of 40 Nm.

5. TRANSMISSION SELECTOR LINKAGE

TO ADJUST LINKAGE

Models With Adjustable Clevis

(1) Ensure that the transmission is in the neutral position.

(2) Raise the front of the vehicle and support it on chassis stands.

(3) Working beneath the vehicle, remove the clip retaining the transmission shift rod clevis to the lower end of the selector lever operating arm.

(4) Remove the clevis and the washers from the operating arm.

(5) Loosen the locknuts on either side of the clevis.

(6) With the transmission in neutral and the selector lever in the N position, turn the clevis on the shift rod to a position where it freely enters the hole in the operating arm without having to push or pull.

(7) Instal the washers and the retaining clip to the clevis and secure the locknuts.

(8) Check the operation of the selector lever in all ranges.

Models With Non Adjustable Clevis

(1) Ensure that the transmission is in the Park position.

(2) Remove the centre console as described in the Body section.

(3) Raise the front of the vehicle and support it on chassis stands.

(4) Disconnect the selector rod from the selector lever arm by removing the clevis pin.

(5) Place the selector lever in the P position.

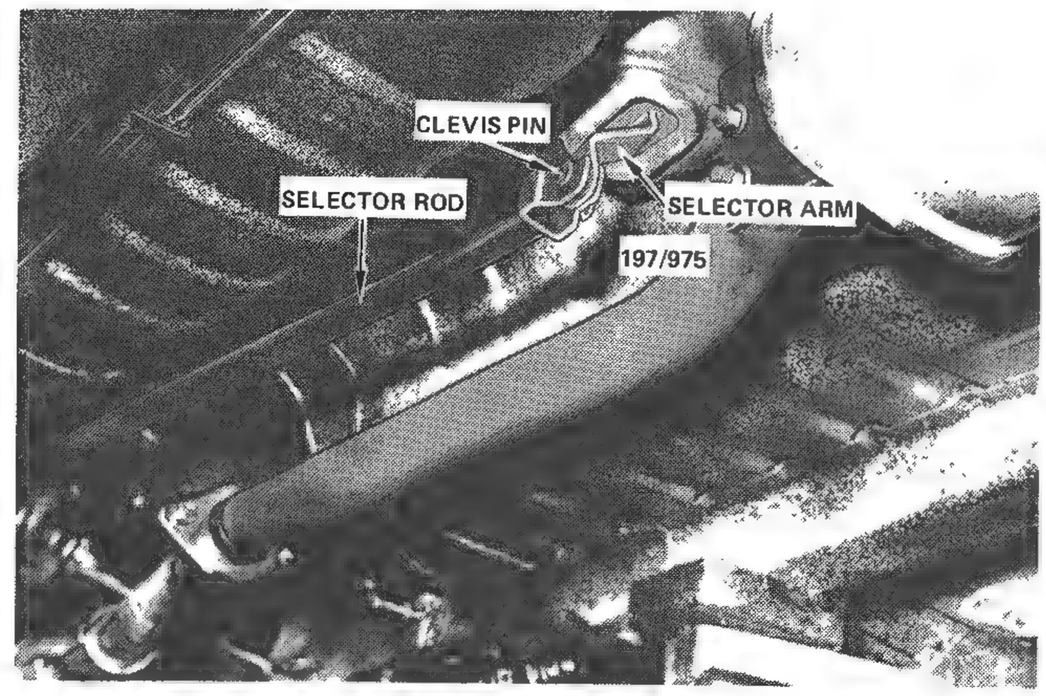

Transmission selector linkage as seen from beneath the vehicle.

(6) Loosen the selector lever mounting bracket screws and move the mounting bracket to such a position where the selector rod clevis hole is aligned with the selector lever arm clevis hole.

(7) Instal the selector rod clevis pin and secure with the clevis pin clip.

(8) Tighten the selector lever mounting bracket screws and instal the centre console.

(9) Check the operation of the selector lever in all ranges.

6. NEUTRAL SAFETY SWITCH

The neutral safety switch, incorporating the reverse lamp switch, is situated on the left hand front side of the transmission. The switch is not adjustable or repairable.

TO TEST

(1) Disconnect the neutral safety switch wiring connector.

(2) Using a suitable circuit continuity tester, connect one lead of the tester to the terminal A on the neutral safety switch side of the connector and connect the second lead to the terminal B.

(3) Have an assistant select 'P' Park and 'N' Neutral in turn. The testing equipment should show continuity between the terminals A and B in both instances.

(4) Select 'R' Reverse and the test equipment should show continuity when the terminals C and D are connected to the test equipment.

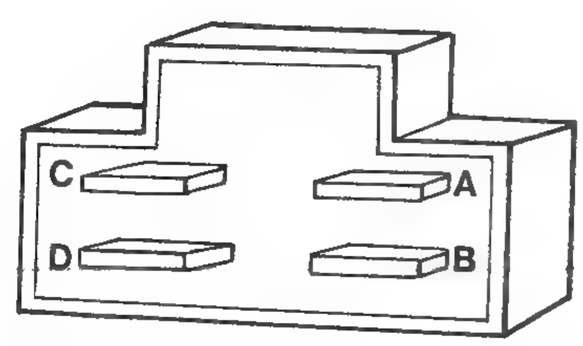

197/LD17

Illustration showing neutral safety switch end of wiring connector.

(5) If the test equipment fails to show continuity in any of the above tests, the neutral safety switch will have to be renewed.

TO RENEW

(1) Disconnect the neutral safety switch wiring connector.

(2) Remove the neutral safety switch from the transmission. Plug the switch aperture to prevent entry of dirt and fluid leakage.

(3) Coat the threaded section of the new switch with a suitable sealant and instal the switch to the transmission after removing the plug.

(4) Connect the neutral safety switch connector.

(5) Check the operation of the switch and ensure that the engine will only start when the selector lever is in the N or P position. Check that the reverse lamps only operate when the selector lever is in the R position.

7. KICKDOWN SWITCH AND SOLENOID

TO CHECK AND TEST

(1) Turn the ignition key to the 'ON' position and depress the accelerator pedal fully.

(2) When the pedal is fully depressed, the electrical circuit between the kickdown switch and the solenoid is completed. When the circuit is completed a click is emitted from the solenoid in the transmission.

(3) Should the solenoid fail to emit a click when the pedal is depressed, first check that the accelerator cable is correctly adjusted. Refer if necessary to the Fuel System section.

(4) Check that the kickdown switch, situated on the accelerator pedal bracket, is correctly adjusted and has its wiring connectors fitted.

(5) Using a test lamp, check that current is reaching the kickdown switch and, when the accelerator pedal is depressed, current is passing through the switch.

(6) With the aid of a second operator, check that the current is reaching the solenoid when the accelerator pedal is depressed. If the current is not reaching the solenoid check the wiring for an open circuit. If the current is reaching the solenoid but it does not click then the solenoid is faulty and must be renewed.

(7) When a new solenoid is installed a small quantity of transmission fluid may be lost. Top up the transmission fluid if necessary, as described under the relevant heading.

TO ADJUST KICKDOWN SWITCH

(1) Turn the ignition key to the 'ON' position and depress the accelerator pedal 90% or more of its travel.

(2) Loosen the locknut on the switch and slowly screw it in until a click is heard from the solenoid.

(3) Tighten the switch locknut and recheck the operation of the switch.

8. TRANSMISSION ASSEMBLY

Special Equipment Required:

To Remove and Instal – Suitable trolley jack to which the transmission can be secured

TO REMOVE

(1) Raise the engine bonnet and fit fender covers to both front fenders.

(2) Disconnect the battery earth lead.

(3) Disconnect the speedometer cable from the transmission.

(4) Disconnect the wire connectors from the neutral safety switch and the kickdown solenoid.

(5) Disconnect the vacuum diaphragm vacuum hose located below the torque converter housing.

(6) Raise the front of the vehicle to a suitable working height, support it on chassis stands and remove the front road wheels.

(7) Remove the splash guards from beneath the vehicle.

(8) Remove the transmission drain plug and using a suitable drain tin, drain the transmission fluid. Replace and tighten the transmission drain plug when the fluid has drained.

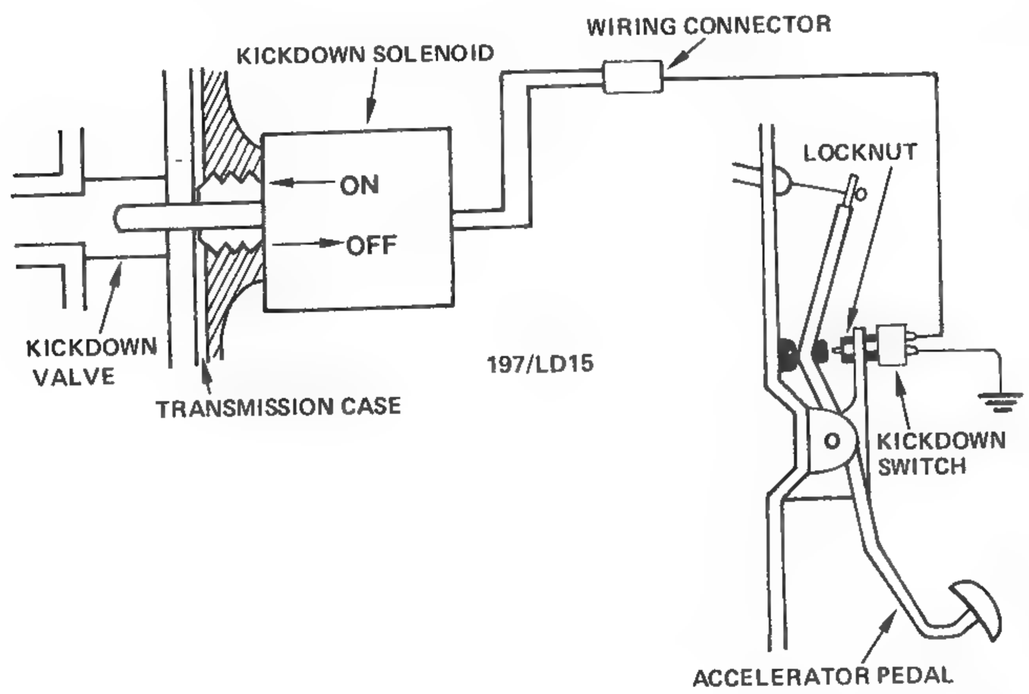

Diagram showing the kickdown layout.

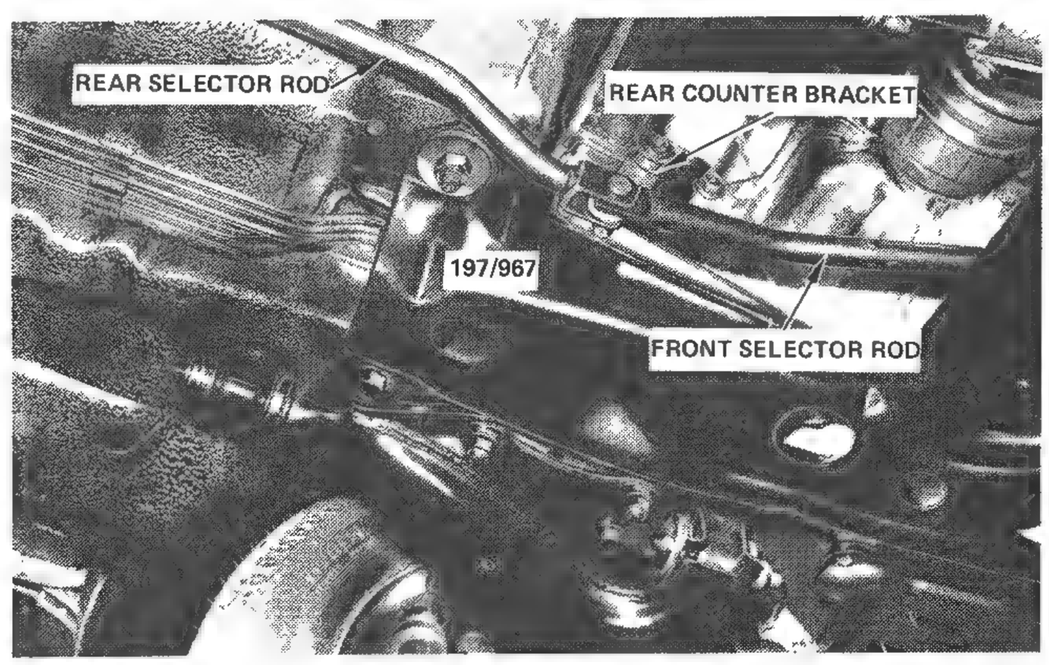

Transmission selector rods and the rear counter bracket as seen from beneath the vehicle.

(9) Remove the drive shafts from the transmission as described in the Manual Transmission and Drive Shafts section.

(10) Support the engine on a suitable jack, using a block of wood between the engine sump and the jackhead to prevent damage to the engine sump.

(11) Slightly raise the engine to take the engine weight off the front and rear engine mountings.

(12) Remove the transmission counter rod from the transmission and the front counter bracket.

(13) Remove the front selector rod from the rear counter bracket and the rear selector rod.

(14) Remove the nuts and washers retaining the front and rear engine mountings to the crossmember.

(15) Remove the crossmember retaining bolts and remove the crossmember from the vehicle.

(16) Remove the left hand side engine mounting bracket to transmission retaining bolts and remove the mounting to body frame retaining bolt and nut. Withdraw the engine mounting assembly.

(17) Disconnect the transmission fluid cooler lines from the transmission and plug the lines and the transmission unions to prevent leakage and the entry of dirt.

(18) Remove the starter motor and the transmission end cover. Mark the converter and the drive plate to ensure assembly in the same position.

(19) Rotate the engine until a torque converter to drive plate retaining bolt appears at the torque converter aperture.

(20) Remove this bolt completely before rotating the engine to remove the following converter retaining bolts.

(21) Support the transmission on the trolley jack, ensure that the trolly jack does not damage the oil pan.

(22) Remove the bolts retaining the transmission to the engine assembly.

(23) Carefully remove the transmission rearwards until it clears the locating dowels on the engine. It may be necessary to gently lever the transmission and the engine apart with a screwdriver between the two assemblies in the area of the locating dowels.

(24) When the transmission is clear of the dowels, attach a suitable retaining strap to the converter housing. Bolt the strap to the housing cover so that the strap retains the converter in position when the transmission is completely withdraw from the engine assembly.

(25) Lower the trolley jack supporting the transmission assembly and withdraw it from beneath the vehicle.

TO INSTAL

Installation is a reversal of the removal procedure with attention to the following points:

(1) Ensure that the torque converter is fully engaged in the front of the transmission.

(2) Ensure that the faces of the converter housing and the rear of the engine are clean and free of burrs.

(3) Tighten the bolts securing the converter housing to the rear of the engine to the specified torque.

(4) Ensure that the drive plate and converter are correctly positioned according to the marks made on removal.

(5) Instal and tighten the bolts securing the drive plate to the torque converter evenly to the specified torque.

(6) Ensure that the vacuum modulator hose, the kickdown and neutral safety switch wires are connected correctly to their respective components.

(7) Fill the transmission with the specified grade of transmission fluid and start the engine. Bring the engine and transmission to operating temperature and check for fluid leaks.

(8) Check and if necessary adjust the selector linkage, the kickdown switch and the neutral safety switch to give satisfactory performance.

(9) Road test the vehicle and recheck the fluid level. Top up if necessary.

SPECIFICATIONS

Steering gear type ..... Rack and pinion
Steering column type ..... Collapsible type
Linkage ..... Direct from rack ends to tie rods and steering knuckle
Steering wheel free play (maximum) ..... 30 mm
Pinion preload ..... 565–1129 mNm

TORQUE WRENCH SETTINGS

Steering wheel nut ..... 50 Nm
Tie rod end castellated nuts ..... 45 Nm
Tie rod end locknuts ..... 40 Nm
Road wheel nuts ..... 108 Nm
Steering gear mounting bolts ..... 46 Nm
Intermediate shaft pinch bolts ..... 27 Nm
Steering column to dash bolts ..... 23 Nm
Tie rod ball housing to rack ..... 98 Nm

1. STEERING TROUBLE SHOOTING

EXCESSIVE PLAY OR LOOSENESS IN STEERING

(1) Tie rod end loose or worn: Tighten or renew worn tie rod end.

(2) Steering gear mounting loose or worn: Tighten mounting bolts or renew steering gear mounting rubbers.

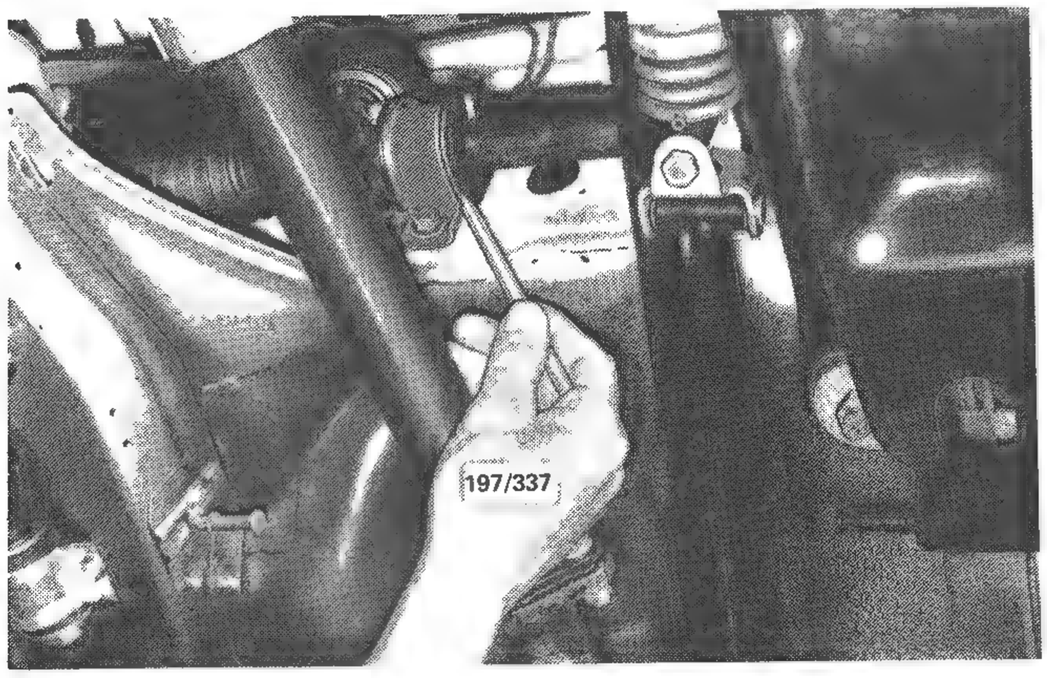

Inspecting the steering gear mounting rubbers for wear. Side movement of the steering gear of 1.5 mm is acceptable due to the type of mounting rubbers utilised.

(3) Worn or loose intermediate shaft: Tighten or renew intermediate shaft.

(4) Steering gear worn or out of adjustment: Adjust the steering gear, if after adjustment looseness is still apparent then overhaul the steering gear.

NOTE:Looseness in the steering is best assessed with the weight of the vehicle on the front wheels. Have an assistant turn the steering wheel backward and forward while the inspection for wear is being made.

Side movement of the steering gear of 1.5 mm is acceptable due to the type of steering gear mounting rubbers utilised.

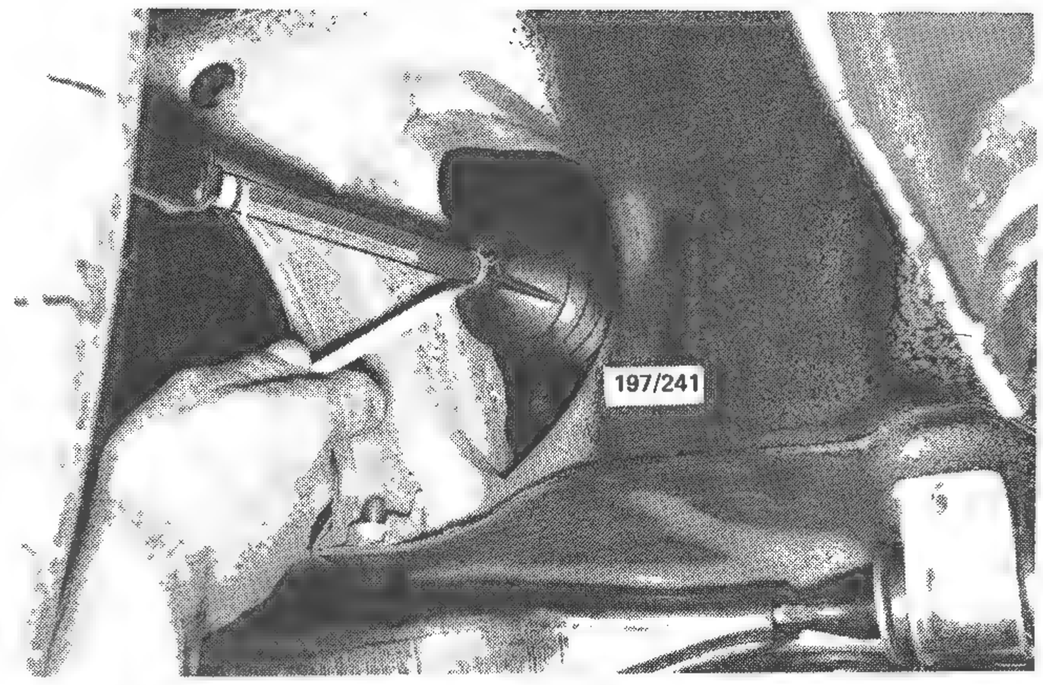

Inspect the steering gear boots for deterioration.

HEAVY STEERING

(1) Low or uneven tyre pressures: Check tyres and inflate to the recommended pressures.

(2) Steering gear incorrectly adjusted: Check and adjust steering gear.

(3) Front suspension worn or out of alignment: Check suspension for wear, renew worn components and align.

(4) Binding in intermediate shaft or tie rod ends: Renew the intermediate shaft or tie rod ends as necessary.

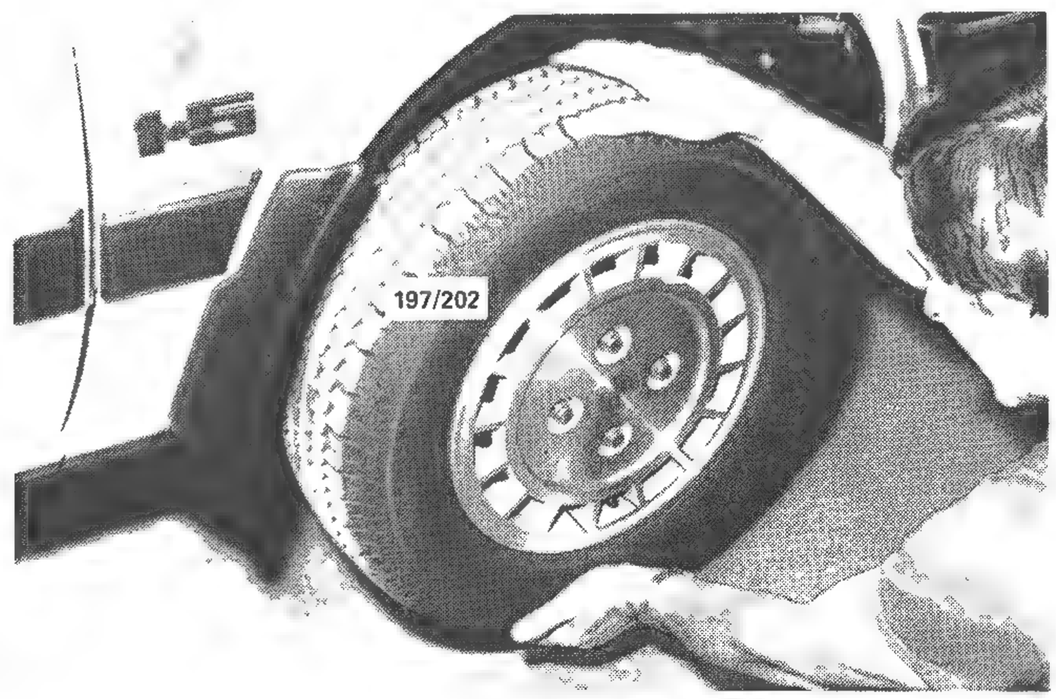

Push and pull the front road wheels at the top and bottom to check for excessive looseness in the suspension ball joints.

(5) Ingress of dust or dirt into the steering gear due to a defective boot: Clean and lubricate internal components of the steering gear and renew defective boot.

NOTE: Ensure that the tyres have ample depth of tread and are inflated to the correct pressures. Check the front suspension for wear prior to having the wheel alignment checked. See the Front Suspension section for component checking procedure.

STEERING PULLS TO ONE SIDE

(1) Uneven tyre wear or pressures: Check condition of tyres and inflate to the recommended pressures.

(2) Front suspension worn or out of alignment: Check suspension for wear, renew worn components and align.

(3) Binding brakes: Check brakes.

(4) Rear suspension worn or out of alignment: Check suspension for wear, renew worn components and align.

NOTE: If tyre condition and front and rear wheel alignment have been checked out and found to be OK, raise the front and rear of the vehicle and spin the wheels to check for the brakes binding.

FRONT WHEEL WOBBLE OR SHIMMY

(1) Tyre or wheel unbalance: Check and balance as necessary.

(2) Worn or incorrectly adjusted front hub bearings: Check and adjust hub bearings.

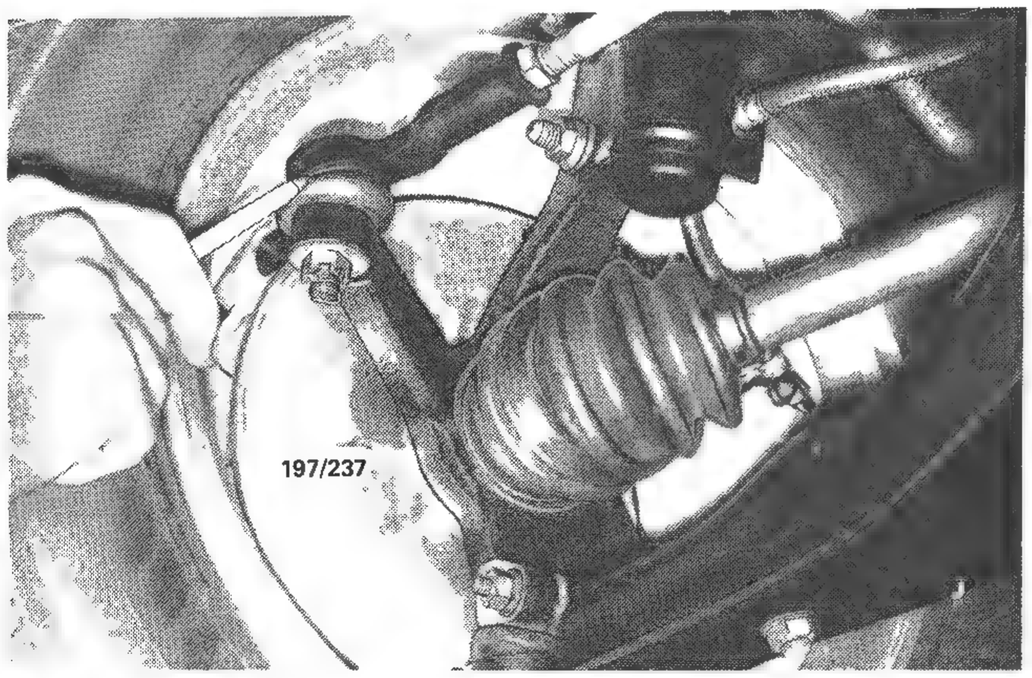

Inspect the tie rod ends for wear or looseness.

(3) Faulty suspension units: Check and renew suspension units, preferably in pairs.

(4) Loose or worn tie rod ends: Check and tighten or renew faulty components.

(5) Looseness in steering gear: Adjust or overhaul the steering gear.

NOTE: Check the steering linkage as previously described and check the front suspension for wear as outlined in the Front Suspension section. Wheel wobble or shimmy is normally caused by unbalance of the tyres and/or wheels, providing the front suspension and steering are in a serviceable condition.

STEERING ERRATIC OR WANDERING

(1) Front suspension worn or out of alignment: Check suspension for wear, renew worn components and align.

(2) Smooth front tyres: Check and renew tyres as necessary.

(3) Excessive play in steering gear or linkage: Check and renew or adjust faulty components.

(4) Excessively high or low tyre pressures: Check and inflate to the recommended pressures.

NOTE: Check the steering linkage as previously described and check the front suspension for wear as outlined in the Front Suspension section.

2. DESCRIPTION

The steering gear is of the rack and pinion type and is mounted on the bulkhead by mounting brackets and rubbers.

The rack is supported in a bush at one end of the housing and at the other end by a spring loaded damper assembly. Adjusting bolt and locknut are provided for adjustment. The tie rods at either end are screwed into the rack and retained in position by lock screws.

The pinion is supported by a ball bearing uppermost and a needle roller bearing located inside the housing. Connected to the pinion shaft is an intermediate shaft which in turn is connected to the steering shaft.

The whole assembly is protected against entry of water and dust by a seal in the pinion plug operating on the pinion shaft and by corrugated boots fastened by clips to the housing, the tie rods and the bulkhead.

No replenishment of the lubricant is necessary in service unless lubricant leaks out by damage to, or failure of, the rubber boots. The ball joints on the outer ends of the tie rods are of the spring loaded sealed type.

All vehicles are equipped with a collapsible type steering column to absorb secondary impact in the event of a severe front end collision.

3. STEERING GEAR ASSEMBLY

Special Equipment Required:
To Measure Pinion Preload – Small tension wrench and a suitable adaptor

TO REMOVE AND INSTAL

(1) Raise the front of the vehicle and support on safety stands. Remove both the front road wheels.

(2) Remove the split pins from both tie rod end castellated nuts and remove the castellated nuts from the tie rod ends.

(3) Disconnect each tie rod end stud by placing a suitable dolly or hammer against one side of the steering knuckle eye and striking the opposite side with a hammer.

(4) Loosen the clip retaining the intermediate shaft protective boot to the steering gear and raise the boot to gain access to the pinch bolt.

(5) Suitably mark the relationship between the intermediate shaft and the pinion shaft to ensure that the intermediate shaft is returned to its original position.

(6) Remove the pinch bolt retaining the intermediate shaft to the pinion shaft.

(7) Suitably mark both steering gear mounting

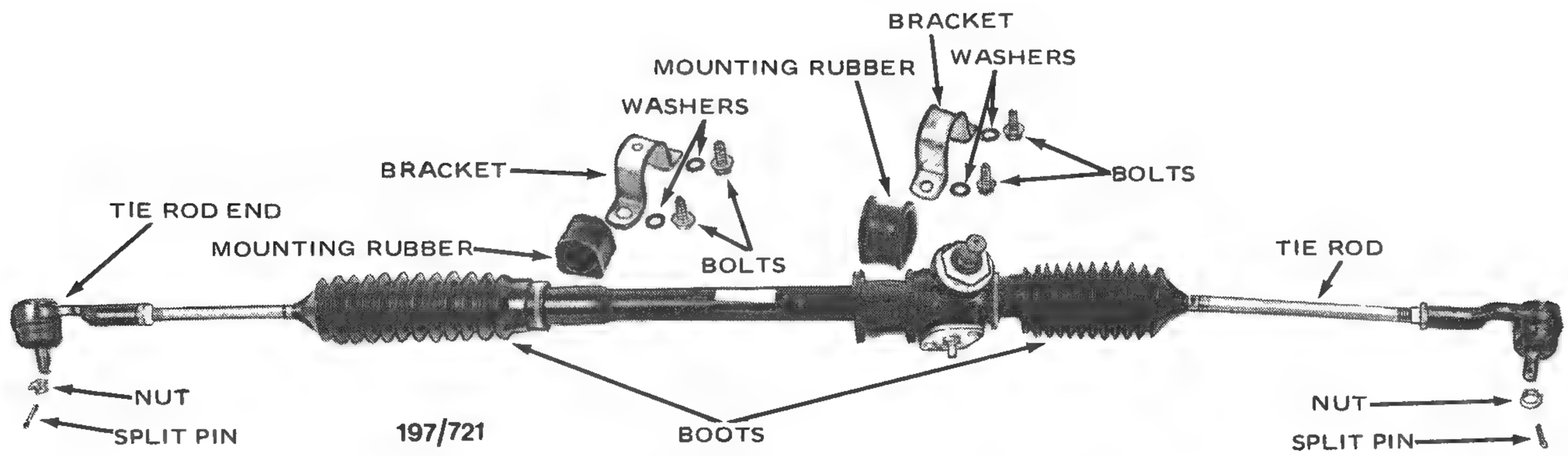

View of steering gear removed from the vehicle.

brackets to ensure that they are returned to their original positions.

(8) Remove the four bolts retaining the steering gear to the bulkhead and remove the brackets.

(9) Lower the steering gear slightly to disconnect the pinion shaft from the intermediate shaft and withdraw the steering gear from the right hand side of the vehicle.

Installation is a reversal of the removal procedure with attention to the following points:

(1) Instal the steering gear from the right hand side of the vehicle, align the marks made during the removal procedure and connect the pinion shaft to the intermediate shaft.

(2) Raise the steering gear to its correct position, instal the mounting brackets as noted during the removal procedure and instal and tighten the four bolts retaining the steering gear to the bulkhead to the specified torque.

NOTE: The mounting bracket with the hole in the centre is installed to the mounting on the left hand side of the vehicle.

(3) Tighten the pinch bolt retaining the intermediate shaft to the pinion shaft to the specified torque and lower the protective boot into position. Tighten the clip retaining the protective boot to the steering gear.

(4) Connect the tie rod ends to their respective steering knuckle and instal and tighten the castellated nuts to the specified torque. Instal new split pins to prevent the castellated nuts loosening during service.

(5) Instal the road wheels and lower the vehicle to the ground.

(6) Check and if necessary adjust the front wheel toe in as described in the Front Suspension section under the Suspension and Steering Angles heading.

TO DISMANTLE

(1) Thoroughly clean the outer surfaces of the steering gear in a suitable cleaning solvent.

(2) Loosen both the tie rod end locknuts and unscrew the tie rod ends from the tie rods, noting the number of turns required to unscrew them. Unscrew and remove the locknuts.

(3) Loosen the clips retaining the boots to the steering gear and the tie rods and withdraw the boots from the steering gear over the tie rods.

(4) Remove the steering gear mounting rubbers from the steering gear.

(5) Mount the steering gear in a vice fitted with protective jaw plates, do not overtighten.

(6) Remove the two bolts retaining the damper assembly in the steering gear housing and noting their installed position, withdraw the damper assembly components from the steering gear housing.

(7) Centre the rack in the housing and mark the housing in relation to the pinion shaft so that the pinion shaft may be returned to its original position.

(8) Remove the plug retaining the pinion shaft in

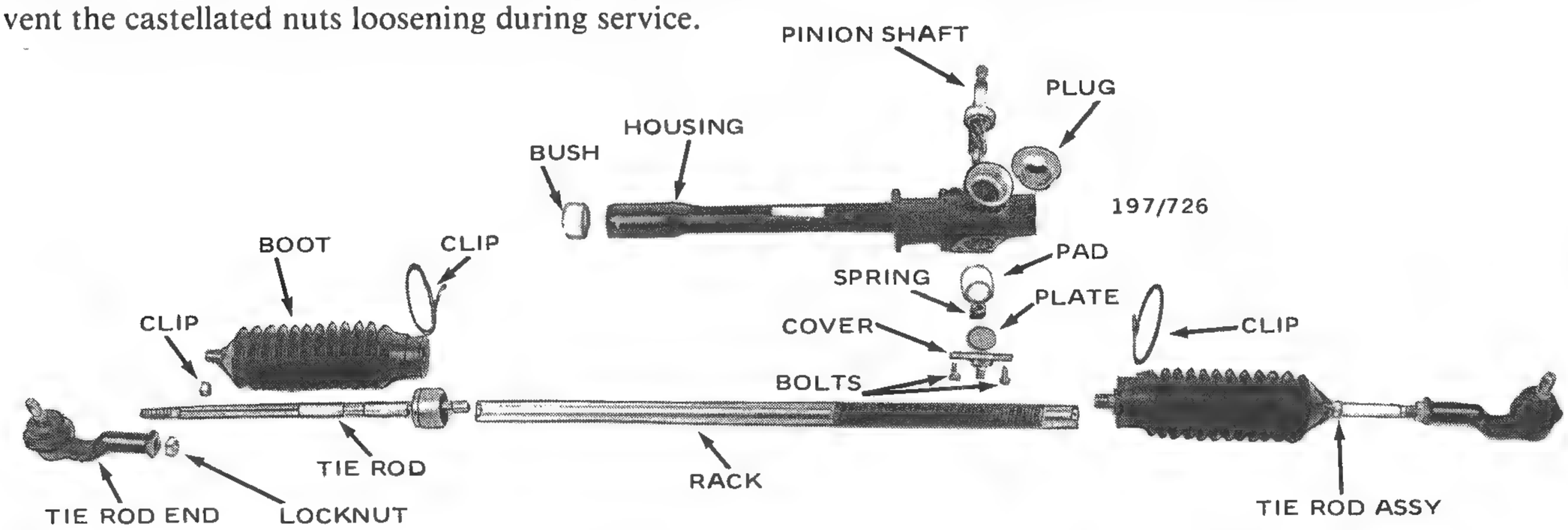

Dismantled view of the steering gear.

the steering gear housing and withdraw the pinion shaft from the steering gear housing. Discard the plug and seal assembly.

NOTE: If difficulty is incurred withdrawing the pinion shaft, firmly grasp the pinion shaft using a pair of pliers and pull the pinion shaft outwards while tapping the steering gear housing with a soft faced hammer in the opposite direction.

(9) Slide the rack to the left and reposition the vice to clamp the rack, utilise protective jaw plates to prevent damage to the rack.

(10) Remove the lock screw from the left side tie rod to rack joint and unscrew the tie rod from the rack.

(11) Withdraw the rack from the right hand side of the steering gear housing.

(12) If necessary, remove the right hand side tie rod from the rack, using the same procedure as the removal of the left hand side tie rod.

(13) If necessary, remove the rack bush from the steering gear housing by depressing the three locating tangs of the bush and levering the bush from the steering gear housing. Discard the bush.

NOTE: A small sliding hammer and a suitable attachment will assist in the removal of the rack bush from the steering gear housing.

TO CLEAN AND INSPECT

(1) Thoroughly clean all components in a suitable cleaning solvent.

(2) Inspect the tie rod ends for wear and damage, pay particular attention to the tie rod end boots and renew as necessary.

(3) Inspect the steering gear boots for splits and deterioration and renew as necessary.

(4) Inspect the teeth on the rack and the pinion for wear chipping and damage and renew as necessary.

(5) Inspect the steering gear mounting rubbers for wear and renew as necessary.

(6) Inspect the damper assembly for wear and damage and renew as necessary. Pay particular attention to the damper spring and the damper pad.

(7) Inspect the tie rods for bend, wear and damage and renew as necessary. Pay particular attention to the ball joints incorporated in the tie rods.

(8) Inspect the steering gear housing for bend, wear and damage and renew as necessary.

(9) Inspect the pinion bearings for wear and damage and renew as necessary.

TO ASSEMBLE

Assembly is a reversal of the dismantling procedure with attention to the following points:

(1) Liberally lubricate all sliding surfaces and moving parts with approximately 100 grams of Castrol LMM grease.

(2) Using a hammer and a suitable sized tubular drift, instal the new rack bush into the steering gear housing. Ensure that the locating tangs on the rack bush protrude through their respective holes in the housing.

(3) If removed, instal the right hand side tie rod into the rack and tighten to the specified torque. Coat the thread of the lock screw with Loctite and instal and tighten the lock screw securely.

(4) Carefully insert the plain end of the rack into the right hand side of the steering gear housing.

(5) Instal the left hand side tie rod into the rack and tighten to the specified torque. Coat the thread of the lock screw with Loctite and instal and tighten the lock screw securely.

(6) Centre the rack in the housing and instal the pinion shaft so that the marks made during the dismantling procedure are aligned.

(7) Instal a new plug and seal assembly to retain the pinion shaft in the housing and tighten securely.

(8) Using a new gasket, instal the damper assembly into the steering gear housing and instal and tighten the two retaining bolts securely.

(9) Instal the steering gear mounting rubbers onto the steering gear housing.

(10) Instal the boots onto the steering gear and retain in position with new clips. Position the inner clips on the engine side of the steering gear.

(11) Instal the tie rod end locknuts and the tie rod ends onto the tie rods ensuring that they are screwed on the same number of turns as noted during the dismantling procedure. Tighten the locknuts to the specified torque.

(12) Attach a small tension wrench with adaptor onto the pinion shaft and measure the load required to rotate the pinion shaft. Compare the measurement obtained with Specifications, if necessary loosen the damper adjusting bolt locknut and adjust the bolt to achieve the specified preload.

(13) Apply a suitable sealant to the threads of the adjusting bolt to prevent leakage and tighten the locknut securely without moving the adjusting bolt.

(14) Instal the steering gear to the vehicle as previously described.

TO ADJUST ON VEHICLE

(1) Thoroughly check the steering linkage for wear as described under Steering Trouble Shooting in this section. Renew any worn components as necessary.

(2) Raise the front of the vehicle and support on safety stands.

(3) Loosen the damper adjusting bolt locknut and loosen the adjusting bolt several turns.

(4) Tighten the adjusting bolt until a higher resistance is felt, then slacken the adjusting bolt approximately 10 deg.

(5) Apply a suitable sealant to the threads of the adjusting bolt to prevent leakage and tighten the locknut securely without moving the adjusting bolt.

(6) Check that the steering gear is not binding by rotating the steering wheel from lock to lock.

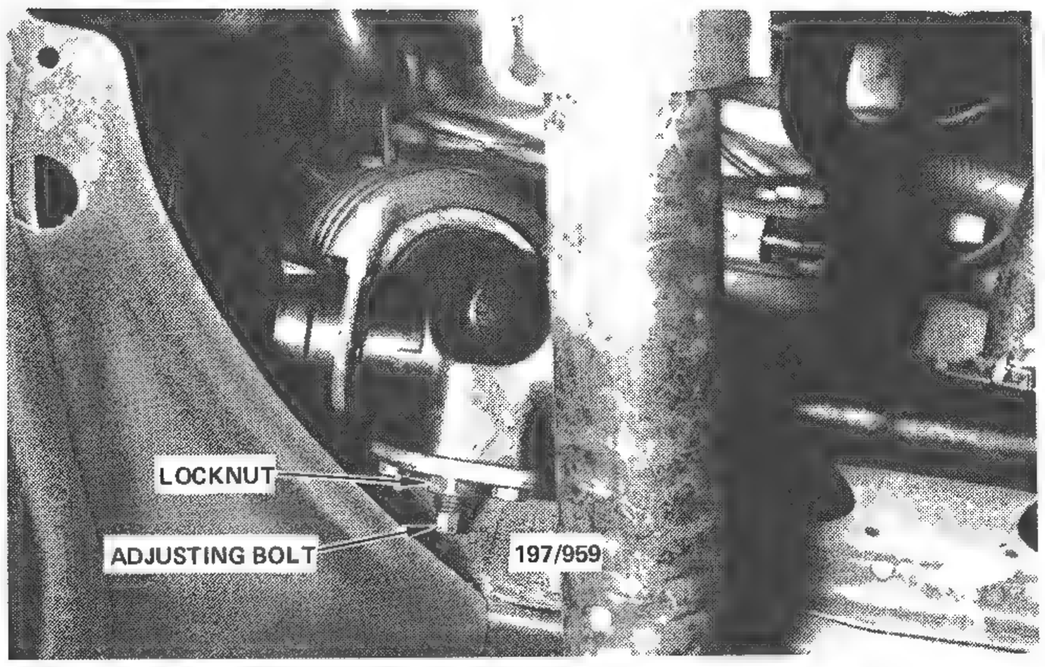

Underbody view showing location of steering gear adjusting point.

(7) Lower the vehicle to the ground and road test.

NOTE: This is only a minor service adjustment to eliminate looseness on the right hand side of the rack caused by insufficient pinion preload.

If looseness is apparent on the left hand side of the rack it will be necessary to overhaul the steering gear as previously described.

4. STEERING COLUMN ASSEMBLY

Special Equipment Required:

To Remove Steering Wheel – Suitable steering wheel puller

TO REMOVE AND INSTAL

(1) Disconnect the negative battery terminal.

(2) Prise the horn pad from the steering wheel and remove the steering wheel retaining nut.

(3) Suitably mark the end of the steering shaft and the steering wheel hub to facilitate correct assembly.

(4) Using a suitable puller withdraw the steering wheel from the steering shaft.

NOTE: Do not strike the end of the puller or the steering shaft in order to separate the wheel from the shaft, as sharp blows can cause irreparable damage to the collapsible components of the steering column assembly.

(5) If applicable, remove the lower dash panel.

(6) Remove the screws retaining the steering column shrouds to the steering column and remove the shrouds from the vehicle.

(7) Disconnect the wiring connectors from the rear of the combination switch, loosen the clamp retaining the combination switch to the steering column and remove the combination switch from the vehicle, refer to the Electrical section if necessary.

(8) Remove the clip from the pinch bolt connecting the intermediate shaft to the steering shaft and remove the pinch bolt.

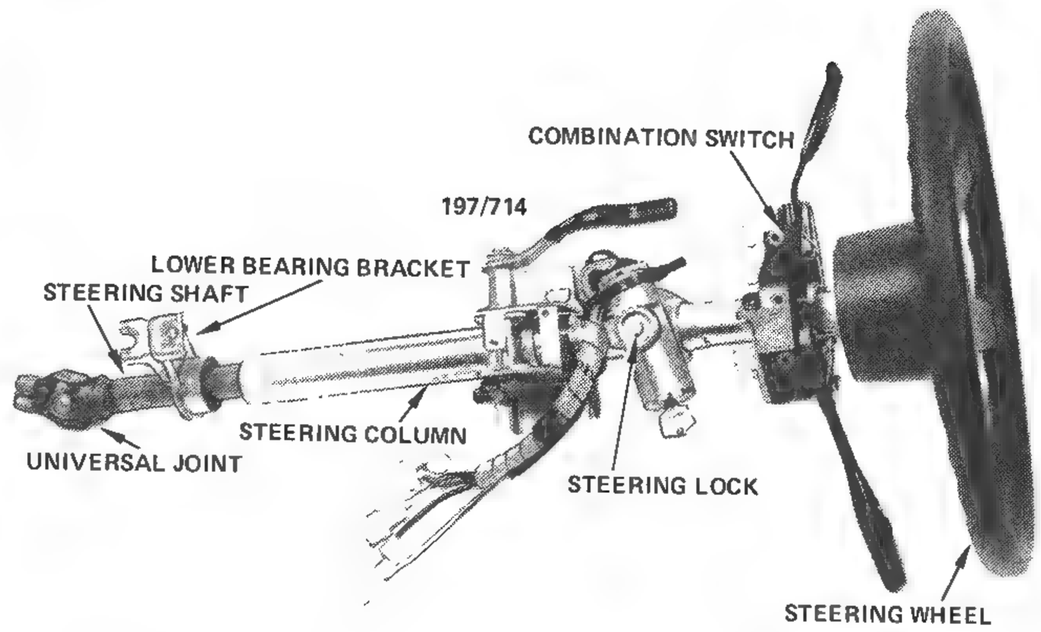

Assembled view of the steering column assembly.

(9) Disconnect the wiring connectors for the ignition switch.

(10) Remove the bolt retaining the lower steering column bearing bracket to the body.

(11) While supporting the steering column, remove the two bolts retaining the steering column to the dash panel and remove the steering column assembly from the vehicle.

(12) If necessary refer to the Electrical section for the removal and installation procedures of the steering lock and ignition switch assembly.

(13) Inspect the collapsible 'U' plates for damage and the universal joint for wear. Renew as necessary.

(14) If necessary, insert the key and release the steering lock and carefully withdraw the steering shaft from the steering column. Inspect the steering column bearings for wear and inspect the steering shaft for bend or damage. Pay particular attention to the small plastic shear pins in the steering shaft.

NOTE: If the vehicle has been involved in a collision and damage is apparent to the steering column, then the steering column assembly must be renewed as it is not repairable.

Installation is a reversal of the removal procedure with attention to the following points:

(1) Liberally lubricate the steering column bushes with Shell Super grease and with the steering lock released, insert the steering shaft in the steering column.

(2) Instal the steering column assembly into position, aligning the master splines on the shafts and instal the two bolts retaining the steering column to the dash.

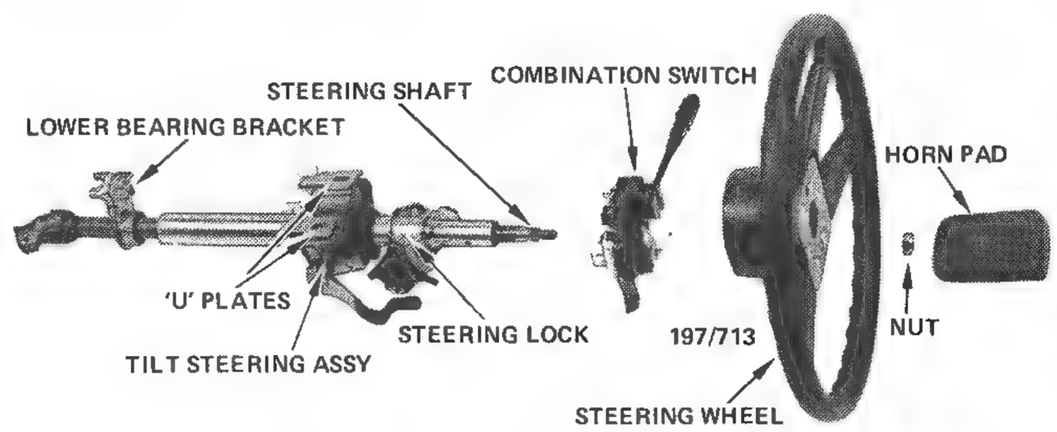

Dismantled view of the steering column assembly.

(3) Instal the bolt retaining the lower steering column bearing bracket to the body.

(4) Instal the pinch bolt connecting the intermediate shaft to the steering shaft, tighten the bolt to the specified torque and instal the clip onto the bolt.

(5) Tighten the two bolts retaining the steering column to the dash and the bolt retaining the lower steering cloumn bearing bracket to the body to the specified torque.

NOTE: It is essential that the column to dash bolts be tightened to the specified torque for the 'U' plates to operate as designed when required.

(6) Instal the combination switch and connect the wiring to the combination switch and the ignition switch, refer to the Electrical System section if necessary.

(7) Instal the steering column shrouds over the steering column and tighten the screws securely.

(8) Align the marks made during the dismantling procedure and instal the steering wheel. Instal and tighten the steering wheel retaining nut to the specified torque.

Ensure that there is sufficient clearance between the top of the steering column shrouds and the steering wheel. If there is insufficient clearance it will be necessary to loosen the column to dash bolts and reposition the steering column.

(9) Instal the horn pad and the lower dash panel if applicable and connect the negative battery terminal. Check that the horn operates, the turn signal switch cancels and that the steering lock operates correctly. Adjust or repair as necessary.

5. INTERMEDIATE SHAFT

TO REMOVE AND INSTAL

(1) Working inside the vehicle, remove the lower dash panel if applicable.

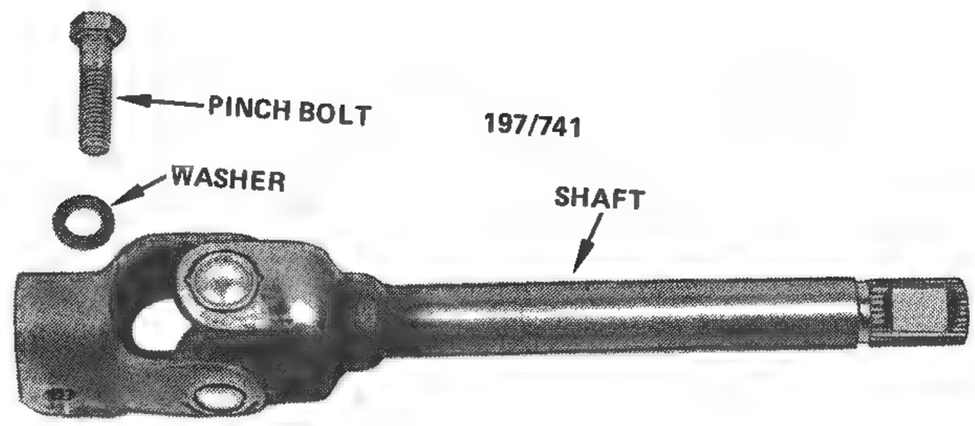

View of the steering intermediate shaft removed from the vehicle.

(2) Remove the clip from the pinch bolt retaining the intermediate shaft to the steering shaft and remove the pinch bolt.

(3) Working in the engine compartment, loosen the clip retaining the protective boot to the steering gear and pull back the boot to gain access to the remaining pinch bolt.

(4) Suitably mark the relationship between the intermediate shaft and the pinion shaft to ensure that the intermediate shaft is returned to its original position.

(5) Remove the pinch bolt retaining the intermediate shaft to the steering gear.

(6) Raise the intermediate shaft to disconnect it from the steering gear then withdraw the intermediate shaft into the engine compartment disconnecting it from the steering shaft.

(7) Remove the intermediate shaft from the vehicle.

Installation is a reversal of the removal procedure with attention to the following points:

(1) Align the marks made during the removal procedure.

(2) Tighten the pinch bolts retaining the intermediate shaft to the specified torque.

(3) Ensure that the intermediate shaft protective boot is in a serviceable condition and correctly installed to prevent the entry of damaging dust or water.

SPECIFICATIONS

Type ..... Independent McPherson strut type with coil springs and control arms

Coil spring:
- Free length ..... 379.0 mm
- Coil diameter ..... 132.5 mm
- Coil wire diameter ..... Tapered

Shock absorber ..... Non-repairable telescopic

Wheel alignment:
- Kingpin inclination ..... 12 deg 10 min
- Camber ..... 0 deg 55 min ± 30 min
- Camber offset ..... Minus 10 mm
- Caster ..... 1 deg 55 min ± 45 min
- Caster trail ..... 5.6 mm
- Toe in ..... Zero ± 3 mm

TORQUE WRENCH SETTINGS

Control arm rear inner mounting:
- Bracket to body ..... 117 Nm
- Bush retaining nut ..... 93 Nm

Suspension unit to body ..... 28 Nm
Tie rod end castellated nut ..... 43 Nm
Caliper mounting bolts ..... 65 Nm

Control arm front inner mounting:
- Bracket to body (before July 1981) ..... 61 Nm
- Bush retaining nut (before July 1981) .... 61 Nm
- Bracket to body (after July 1981) ..... 73 Nm
- Bush retaining nut (after July 1981) ..... 73 Nm

Front hub nut ..... 235 Nm
Ball joint to control arm ..... 117 Nm
Ball joint pinch bolt ..... 54 Nm
Suspension unit to steering knuckle ..... 117 Nm
Stabiliser bar to body ..... 46 Nm
Stabiliser bar to control arm ..... See text
Piston rod nut ..... 68 Nm

1. FRONT SUSPENSION TROUBLE SHOOTING

FRONT END NOISE

(1) Loose upper suspension unit mounting or piston rod: Tighten mounting or piston rod nuts.

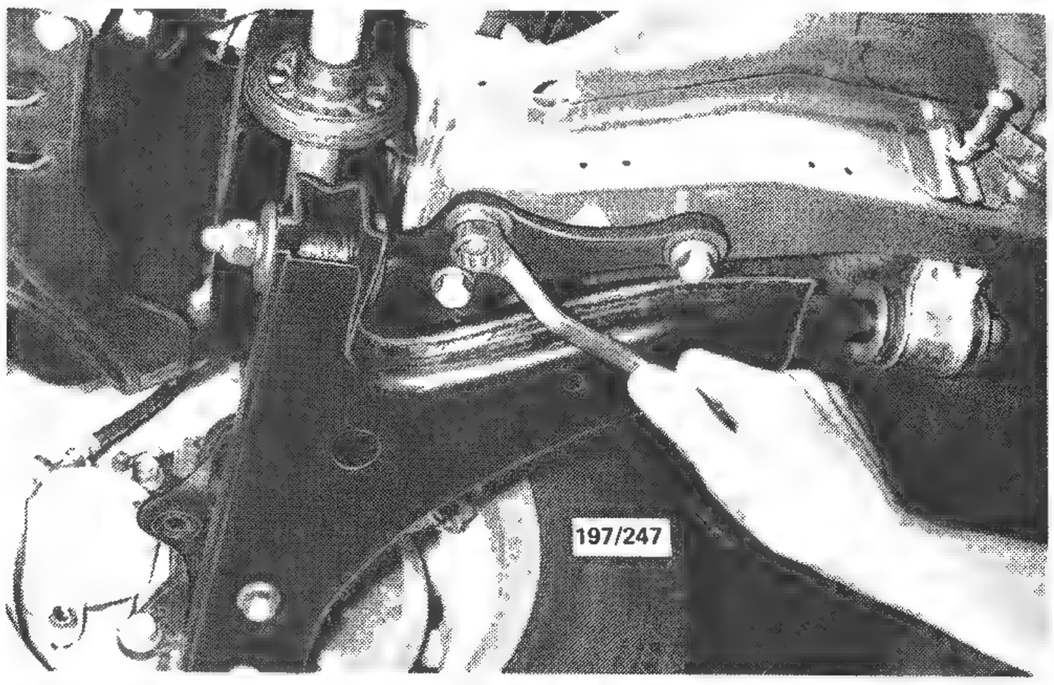

Checking the tightness of the inner control arm mountings.

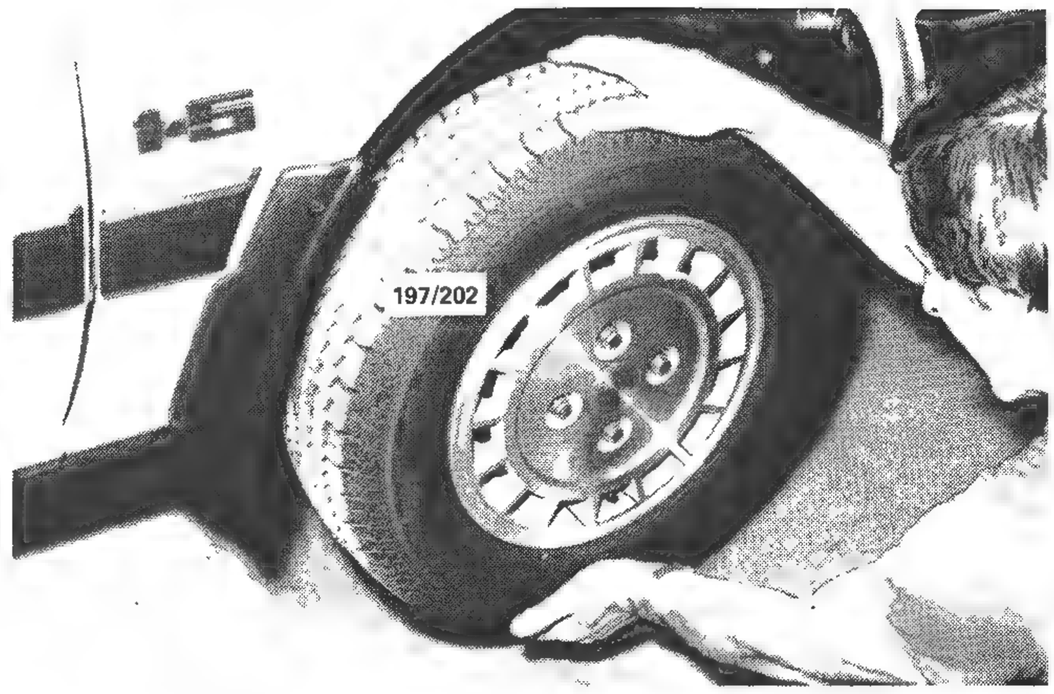

Push and pull the front road wheels at the top and bottom to check for excessive looseness in the suspension ball joints.

(2) Loose or worn suspension ball joint: Tighten or renew ball joint.

(3) Noise in suspension unit: Renew suspension unit, preferably in pairs.

(4) Worn or loose steering gear: Tighten, adjust or overhaul steering gear.

(5) Worn or loose front hub bearings: Renew or adjust front hub bearings.

(6) If applicable, loose or worn stabiliser bar mounting bushes: Tighten or renew stabiliser bar mounting bushes.

(7) Loose or worn inner control arm mountings: Tighten or renew inner control arm mountings.

NOTE: To check the front suspension components for wear, first raise the front of the vehicle and support on safety stands positioned under the front jacking points, enabling the front wheels to hang free. With an assistant pushing and pulling the front road wheels at the top and then at the bottom, check for excessive looseness at the front hub bearings, the ball joints and inner control arm mountings. As a further check on the inner control arm mountings, insert a lever between the body and the suspect mounting and lever the mounting in all directions checking for excessive looseness. Stabiliser bar mounting bushes can be visually checked for wear and deterioration. Front hub bearing noise can be diagnosed by spinning one front road wheel at a time and listening for a rumble.

POOR OR ERRATIC ROAD HOLDING ABILITY

(1) Low or uneven tyre pressures: Check and inflate tyres to the recommended pressures.

(2) Defective suspension unit: Renew suspension unit, preferably in pairs.

(3) Incorrect front or rear wheel alignment: Check and adjust front or rear wheel alignment as necessary.

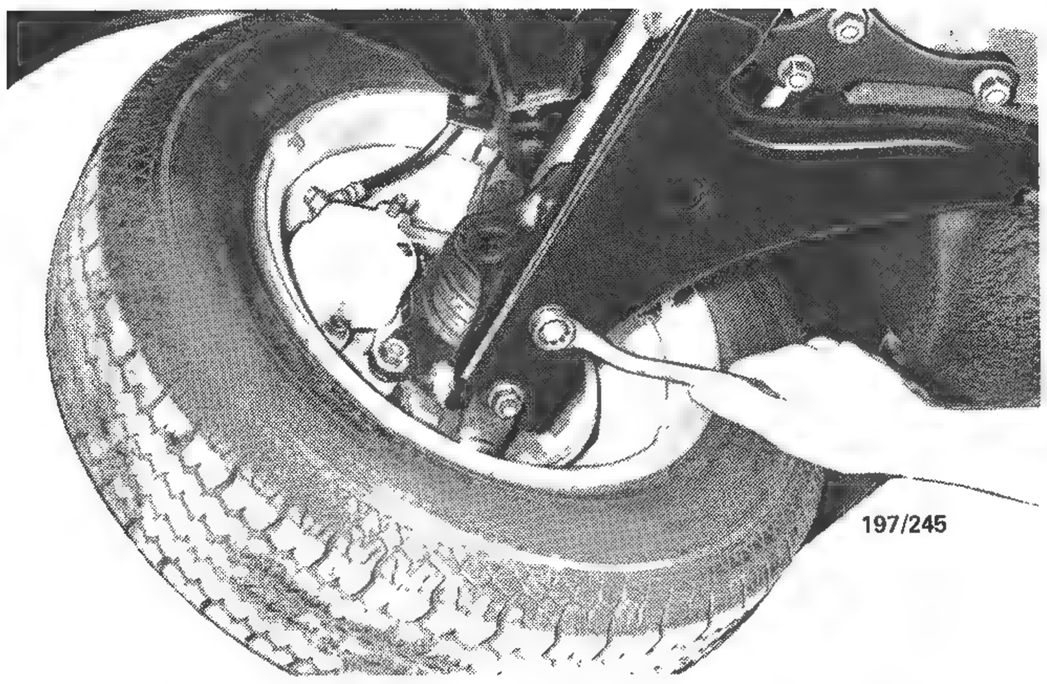

Checking the tightness of the ball joint retaining bolts.

(4) Weak or broken front coil springs: Check and renew front coil springs as a matching pair.

(5) Loose or worn inner control arm mountings, suspension ball joints, upper suspension mounting or piston rod nut: Refer to Front End Noise.

(6) Weak or broken rear coil springs: Check and renew rear coil springs as a matching pair.

NOTE: As a quick guide to suspension unit condition, bounce the front of the vehicle up and down (one side at a time) and observe that the vehicle comes to rest in a single movement. If it bounces two or three times before stopping, the suspension unit should be renewed preferably in pairs. If the front of the vehicle is laying down further on one side than the other, remove the coil spring and measure the free length and compare with Specifications. If the spring is found to be unserviceable it is good practice to instal two new springs as a matching pair. This also applies to the coil springs at the rear of the vehicle.

2. DESCRIPTION

The front suspension comprises of two vertical suspension units/shock absorbers surrounded at the upper end of each by a coil spring. On the top of the coil spring is the upper mounting attached to the underside of the front wheel housing. The piston rod of the shock absorber is in turn attached to the centre of the upper mounting by a rubber mounted thrust bearing assembly.

The suspension unit at its lower end is bolted to the steering knuckle. The steering arm is integral with the steering knuckle which also houses the front hub bearings.

The suspension control arms pivot at their inner end on front and rear rubber mounting and bracket assemblies. A ball joint is bolted to the outer end of each control arm which in turn is attached to the steering knuckle by a pinch bolt.

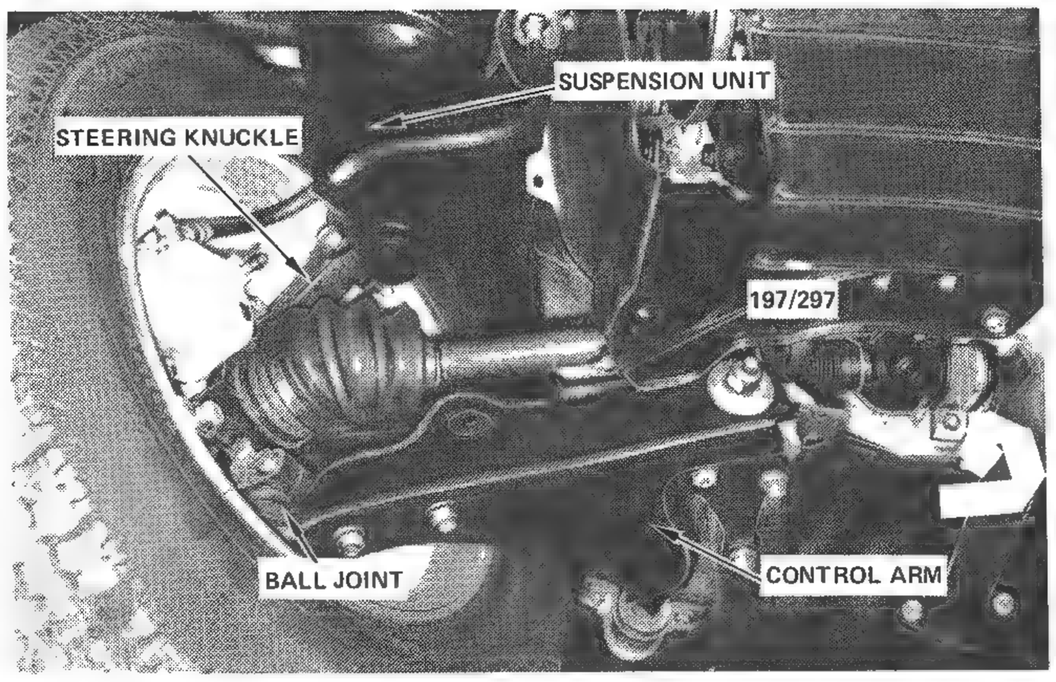

Underbody view of the right hand side front suspension showing the location of the front suspension components.

A stabiliser bar, installed to some models, is attached to the body by rubber mountings and to the control arms by connecting link assemblies.

The kingpin inclination, the camber offset, the caster and the caster trail are all set in production and cannot be adjusted. Any variation in these angles will be caused by worn or damaged components. The camber angle is also set in production and cannot be adjusted except for a small amount of variation achieved by lowering and rotating the upper suspension unit mounting through 180 deg.

3. STEERING KNUCKLE AND HUB ASSEMBLY

TO REMOVE AND INSTAL

(1) Raise the front of the vehicle and support on safety stands positioned under the front jacking points. Remove the road wheel.

(2) Using a hammer and a suitable punch release the tab retaining the hub nut and, with the aid of an assistant applying the brakes, loosen and remove the hub nut.

(3) Remove the split pin and the castellated nut retaining the tie rod end to the steering knuckle.

(4) Disconnect the tie rod end from the steering knuckle by placing a hammer or a suitable dolly against one side of the eye and striking the opposite side with a hammer.

(5) Remove the two bolts retaining the brake caliper to steering knuckle and slide the brake caliper off over the brake disc. Suspend the caliper with a suitable piece of wire attached to the coil spring.

(6) Remove the pinch bolt retaining the ball joint to the steering knuckle and separate the two components by pushing the control arm downwards.

(7) Remove the two nuts from the bolts retaining the steering knuckle to the suspension unit.

(8) Supporting the steering knuckle and hub assembly, remove the two bolts retaining the steering

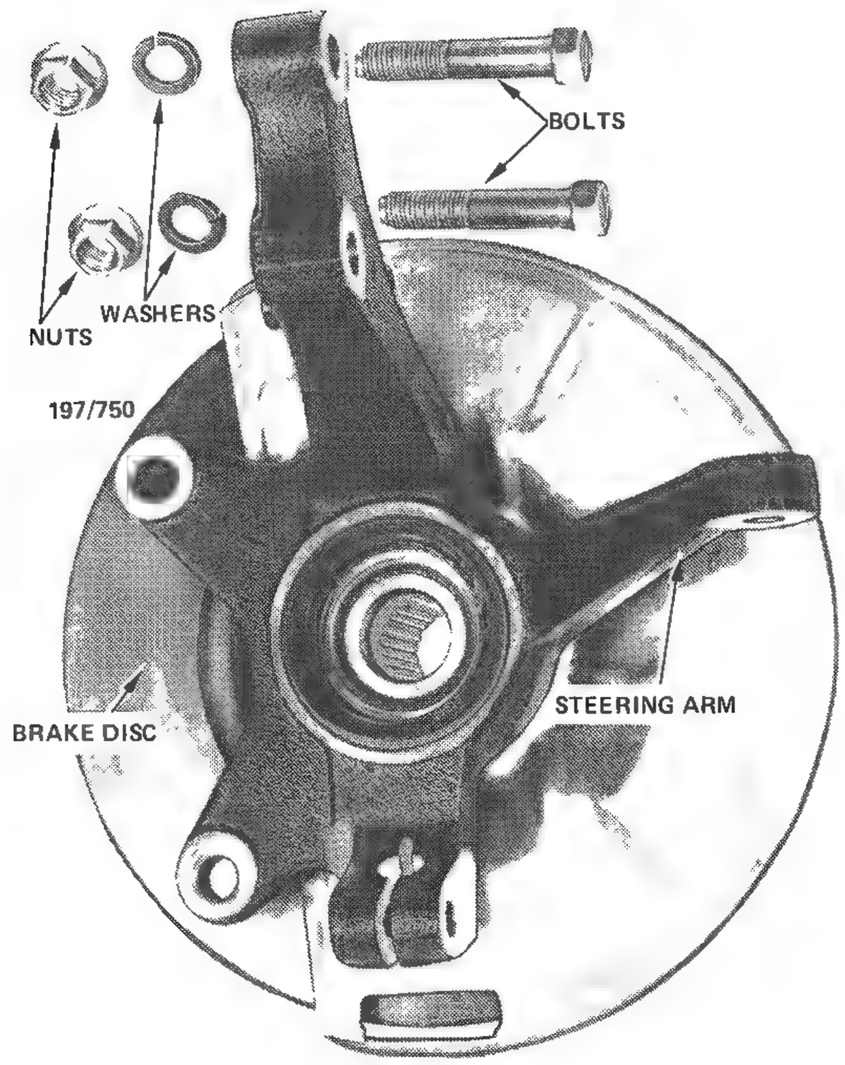

View of steering knuckle and hub assembly removed from the vehicle.

knuckle to the suspension unit and withdraw the steering knuckle and hub assembly from the drive shaft.

> *NOTE: Special equipment is required to dismantle and assemble the front hub, therefore for the renewal, adjustment and repacking of the front hub bearings it is recommended that the steering knuckle and hub assembly be taken to a workshop that has the necessary equipment.*

Installation is a reversal of the removal procedure with attention to the following points:

(1) Instal the steering knuckle and hub assembly over the drive shaft and instal and tighten the steering knuckle to suspension unit retaining nuts and bolts to the specified torque.

(2) Insert the ball joint stud in the steering knuckle and instal and tighten the pinch bolt retaining the ball joint to the steering knuckle to the specified torque.

(3) Insert the tie rod stud in the steering knuckle eye and instal and tighten the castellated nut to the specified torque. Instal a new split pin to prevent the castellated nut loosening during service.

(4) Position the brake caliper over the brake disc and instal and tighten the caliper retaining bolts to the specified torque.

(5) Instal a new hub nut and, with the aid of an assistant applying the brakes, tighten the hub nut to the specified torque. Stake the hub nut to prevent the nut loosening during service.

(6) Instal the road wheel and lower the vehicle to the floor.

4. SUSPENSION UNIT

Special Equipment Required:
To Remove and Instal Coil Spring – Spring compressor

TO REMOVE AND DISMANTLE

(1) Raise the front of the vehicle and support on safety stands positioned underneath the front jacking points. Remove the road wheel.

(2) Remove the clip retaining the brake hose to the suspension unit and disconnect the brake hose.

(3) Remove the two nuts and bolts connecting the steering knuckle to the suspension unit and separate the two components.

(4) Open the bonnet and, working in the engine compartment, scribe a line across the upper suspension unit mounting and the body to ensure that the upper mounting is returned to its original position.

(5) While supporting the suspension unit, remove the two nuts retaining the suspension unit to the body and remove the suspension unit from the vehicle.

(6) Prior to dismantling the suspension unit, clean it thoroughly and ensure a clean working area is available.

(7) Attach the spring compressor to the coil spring and compress the coil spring.

> *NOTE: Due to the coil spring being offset, extra care must be taken during the compression of the spring otherwise injury to the operator may result.*

(8) Prise off the upper mounting dust cap and remove the piston rod nut.

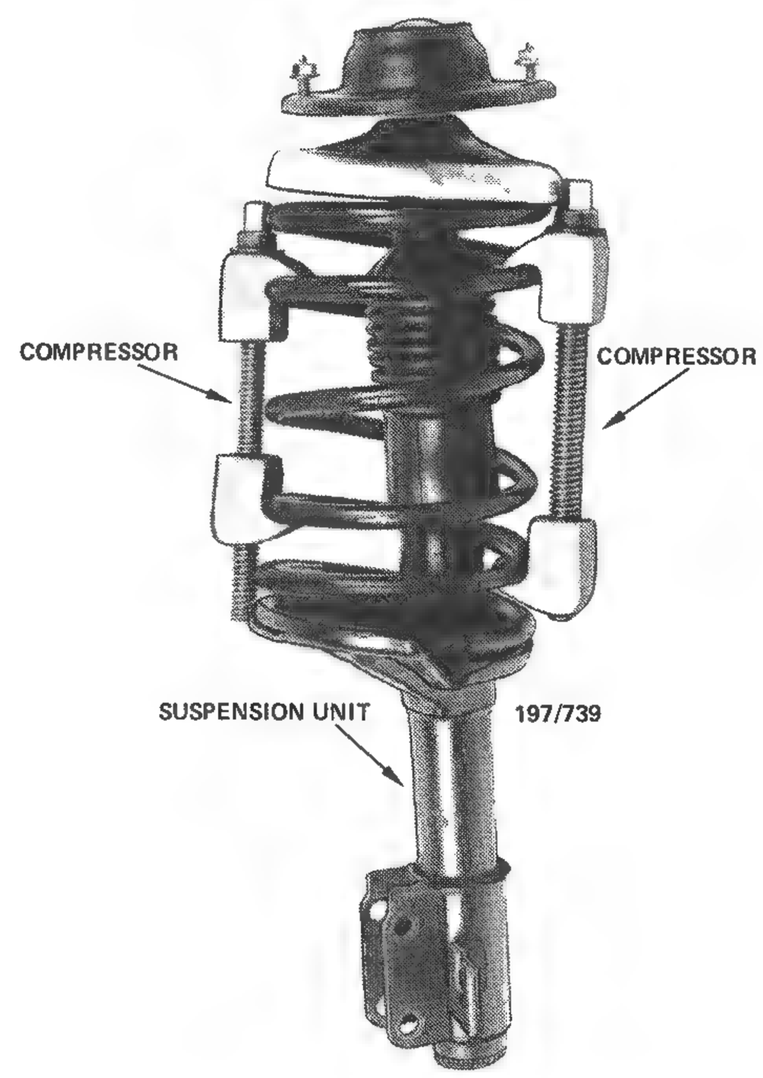

Suspension unit removed from the vehicle, showing spring compressor fitted.

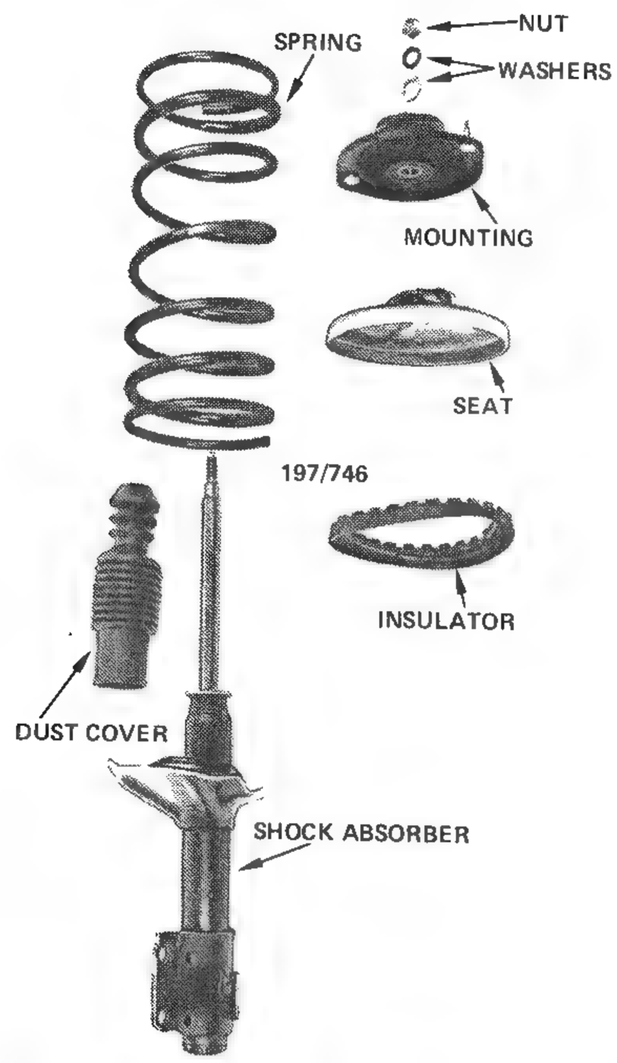

Dismantled view of the suspension unit.

(9) Noting their installed positions, withdraw the washers, the upper mounting, the spring seat, the spring insulator, the coil spring and the dust cover from the shock absorber.

(10) Check the hydraulic operation of the shock absorber. With the shock absorber vertical, move the piston rod up and down several times. A firm pressure with no slack spots should be evident in both directions, also check the shock absorber for fluid leakage. If the leakage is excessive and/or no pressure is felt the shock absorber should be renewed, preferably in pairs.

(11) Check the upper mounting assembly for damage and fatigue. Check the bearing for wear and roughness. Check all the rubber components and the spring seats and insulators for wear, damage and deterioration. Renew worn or damaged components as necessary.

(12) Check the coil spring for cracking and fatigue. Measure the free length of the coil spring and compare with the free length listed in Specifications. If one coil spring is found to be unserviceable, it is a good practice to instal two new coil springs as a matching pair.

TO ASSEMBLE AND INSTAL

Assembly and installation is a reversal of the removal and dismantling procedure with attention to the following points:

(1) With the piston rod fully extended position the dust cover, the coil spring, the spring insulator, the spring seat, the upper mounting and the washers on the shock absorber.

(2) Instal and tighten the piston rod nut to the specified torque. Instal the upper mounting dust cap.

(3) Remove the spring compressor from the coil spring.

(4) Instal the suspension unit into the front wheel housing, align the marks made on the body and the upper suspension unit mounting and insert the studs in the stud holes.

(5) Instal and tighten the upper suspension unit mounting nuts to the specified torque.

(6) Connect the steering knuckle to the suspension unit and instal and tighten the bolts connecting the steering knuckle to the specified torque.

(7) Instal the brake hose into the bracket on the suspension unit and instal the clip to retain the brake hose in position.

(8) Instal the road wheel and lower the vehicle to the floor.

NOTE: If a new upper suspension unit mounting was installed, it is recommended that the vehicle be taken to a wheel alignment specialist or Ford dealer to check and if necessary adjust the camber angle.

5. BALL JOINT

TO RENEW

(1) Raise the front of the vehicle and support on safety stands positioned under the front jacking points. Remove the road wheel.

(2) Remove the pinch bolt retaining the ball joint to the steering knuckle and separate the two components by pushing the control arm downwards.

(3) Remove the two bolts retaining the ball joint in the control arm and withdraw the ball joint.

Installation is a reversal of the removal procedure with attention to the following points:

(1) Instal the new ball joint into the control arm and tighten the two retaining bolts to the specified torque.

(2) Insert the ball joint stud in the steering knuckle and instal and tighten the pinch bolt retaining the ball joint to the steering knuckle to the specified torque.

(3) Instal the road wheel and lower the vehicle to the floor.

(4) Check and if necessary adjust the front wheel toe in as later described in this section.

6. CONTROL ARM

Special Equipment Required:

To Renew Front Inner Bush – Press and press plates

TO REMOVE AND DISMANTLE

(1) Raise the front of the vehicle and support on safety stands placed under the front jacking points. Remove the road wheel.

(2) If applicable, remove the stabiliser bar connecting link from the control arm as later described in this section under the Stabiliser Bar heading.

(3) Remove the pinch bolt retaining the ball joint to the steering knuckle and separate the two components by pushing the control arm downwards.

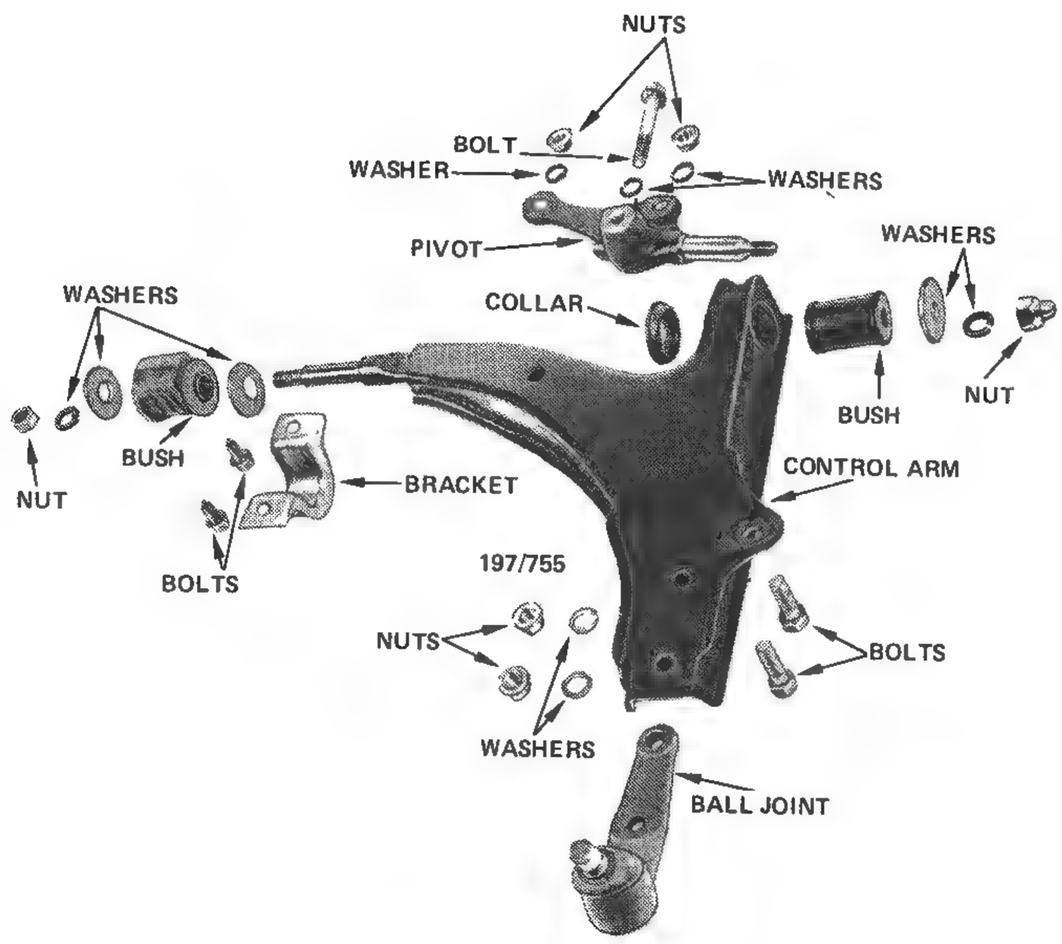

Dismantled view of the control arm and components.

(4) Remove the two bolts retaining the rear inner control arm mounting bracket to the body and remove the bracket.

(5) Remove the two nuts and the bolt retaining the front inner control arm mounting pivot to the body and remove the control arm from the vehicle.

(6) Remove the rear bush retaining nut and withdraw the washers and the bush from the rear control arm pivot. Inspect the bush for wear and deterioration and renew as necessary.

(7) Remove the front mounting pivot retaining nut, withdraw the mounting pivot from the control arm and collect the washers and the collar.

(8) Using the press and press plates, press the front bush from the control arm and discard the bush.

(9) Inspect the ball joint for wear and damage and renew as necessary.

(10) Inspect the control arm for cracks, fatigue and bend and renew as necessary.

TO ASSEMBLE AND INSTAL

Assembly and installation is a reversal of the removal and dismantling procedure with attention to the following points:

(1) Using the press and press plates, press the new front bush into the control arm. Do not use oil or grease to assist installation of the front bush.

(2) Instal the collar onto the pivot and instal the front mounting pivot into the control arm from the rear. Instal the washers and loosely instal the bush retaining nut.

(3) Instal the rear bush and the washers onto the control arm and loosely instal the rear bush retaining nut.

(4) Instal the control arm onto the vehicle and tighten the nuts and bolts retaining the front and rear mounting bracket and pivot to the body to the specified torque.

(5) Raise the control arm and insert the ball joint stud in the steering knuckle. Instal and tighten the pinch bolt retaining the ball joint to the steering knuckle to the specified torque.

(6) If applicable, instal the stabiliser connecting link to the control arm as later described in this section under the Stabiliser Bar heading.

(7) Instal the road wheel and lower the vehicle to the floor.

(8) Tighten the rear and front bush retaining nuts to the specified torque, with the weight of the vehicle on the road wheels.

(9) Check and if necessary adjust the front wheel toe in as later described in this section.

7. STABILISER BAR

TO REMOVE AND INSTAL

(1) Run the front of the vehicle onto the car ramps.

NOTE: The vehicle is run onto car ramps, as opposed to being supported on safety stands, to facilitate the removal and installation of the stabiliser bar.

(2) Remove the splash guards from underneath the vehicle.

(3) Remove the bolts retaining the stabiliser bar brackets to the body and remove the brackets from the vehicle.

(4) Remove the nuts retaining the stabiliser bar

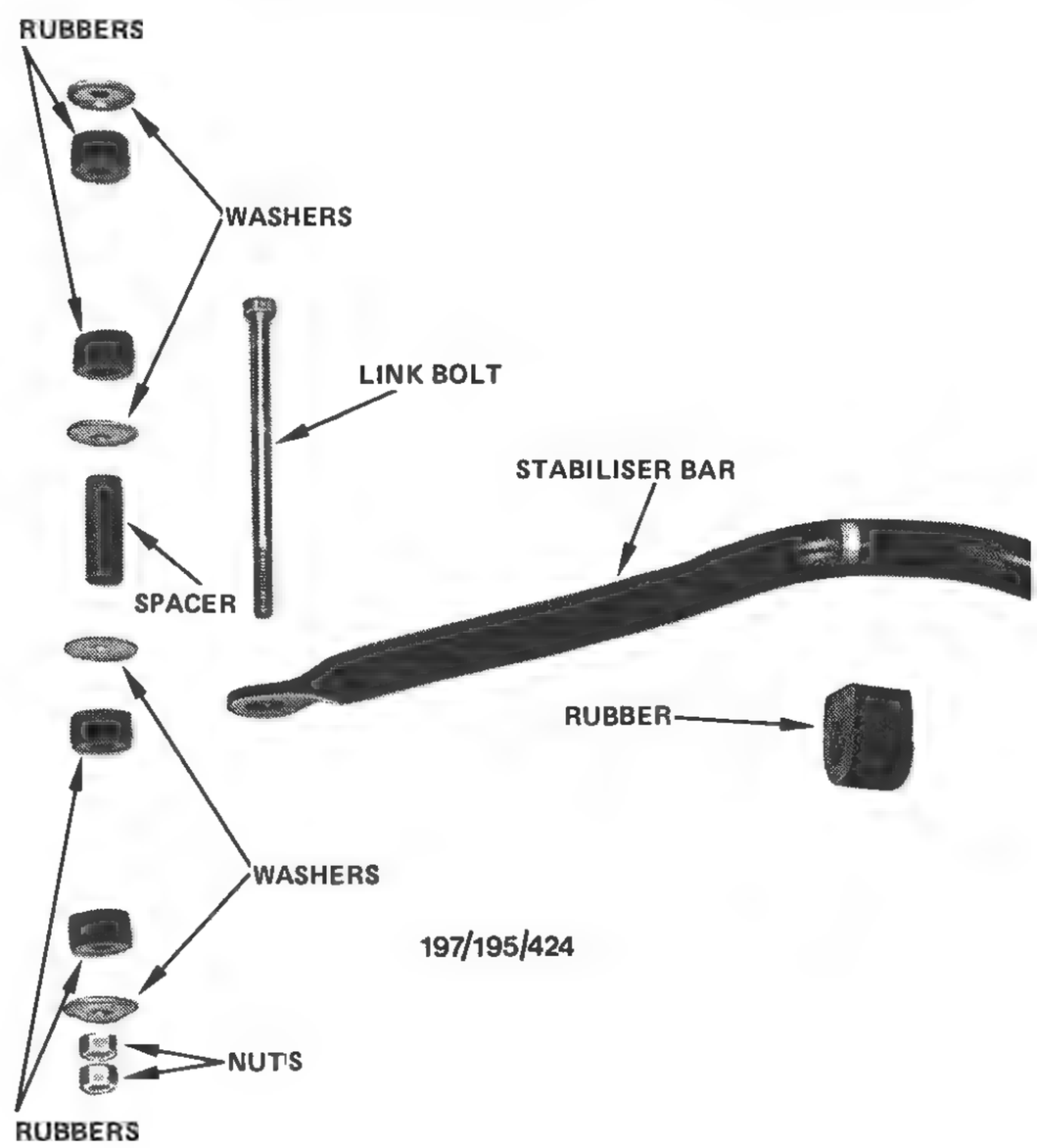

Dismantled view of the front stabiliser bar and components.

connecting link assembly to the suspension control arm and withdraw the washer and the rubber bush.

(5) Remove the link bolt and, noting their installed positions, remove the remaining link components.

(6) Repeat operations (3) and (4) to the other side of stabiliser bar and remove the stabiliser bar from the vehicle.

(7) Remove the stabiliser bar mounting rubbers from the stabiliser bar, inspect the mounting rubbers for wear and damage and renew as necessary.

(8) Check the stabiliser bar for cracks and fatigue and renew as necessary.

(9) Inspect the stabiliser bar link components for wear and damage, pay particular attention to the rubber bushes and renew as necessary.

Installation is a reversal of the removal procedure with attention to the following points:

(1) Coat the stabiliser bar mounting rubbers with a rubber lubricant to aid assembly.

(2) Instal the stabiliser bar mounting rubbers onto the stabiliser bar.

(3) Instal the stabiliser bar to the vehicle and loosely connect the stabiliser bar brackets to the body.

(4) Instal the stabiliser bar connecting link assembly to both sides as noted during the removal procedure.

(5) Tighten the bolts retaining the stabiliser bar brackets to the body to the specified torque.

(6) Tighten the stabiliser bar connecting link nuts until 6.3 mm of thread is showing below the lower lock nut and tighten the nuts together.

(7) Instal the splash guards to the underneath of the vehicle and lower the vehicle to the floor.

8. SUSPENSION AND STEERING ANGLES

ADJUSTMENT

NOTE: Extensive knowledge and specialised equipment is required to measure the suspension and steering angles except the front wheel toe in. It is therefore not a worthwhile proposition for the average person to carry out a complete wheel alignment and the vehicle should be taken to a wheel alignment specialist or Ford dealer.

Prior to carrying out a wheel alignment, carry out a thorough inspection of the steering linkages, front hub bearing adjustment, ball joints, coil springs and suspension units. Renew or repair as necessary.

The tread of the front tyres should be examined for excessive or uneven wear as certain conditions of tyre wear are indicative of damaged or worn components in the suspension, steering linkage and/or wheels and bearings. Refer to Tyre Wear Trouble Shooting in the Wheels and Tyres section. If the tyres are found to be defective, renew with serviceable tyres.

The vehicle should be unladen, except for the normal amount of fuel and with the tyres inflated to the normal pressures.

KINGPIN INCLINATION, CAMBER OFFSET, CASTER AND CASTER TRAIL

The kingpin inclination, the camber offset, the caster and the caster trail are all set in production and cannot be adjusted. Any variation in these angles will be caused by worn or damaged components.

CAMBER

The camber angle is set in production and cannot be adjusted if the variation is excessive. If the camber angle variation is small, it may be rectified by the following procedure:

(1) Raise the front of the vehicle and support on safety stands positioned under the front jacking points.

(2) Open the bonnet and remove the two nuts retaining the upper suspension unit mounting to the body.

(3) Push the front suspension unit down sufficiently for the mounting studs to clear the mounting stud holes.

(4) Rotate the mounting through 180 deg, instal the upper mounting to the body and instal and tighten the retaining nuts to the specified torque.

(5) Lower the vehicle to the floor and recheck the camber angle.

NOTE: The above procedure will only vary the camber angle a total of 0 deg 28 min. Any variation in these angles after the above procedure have been carried out will be caused by worn or damaged components.

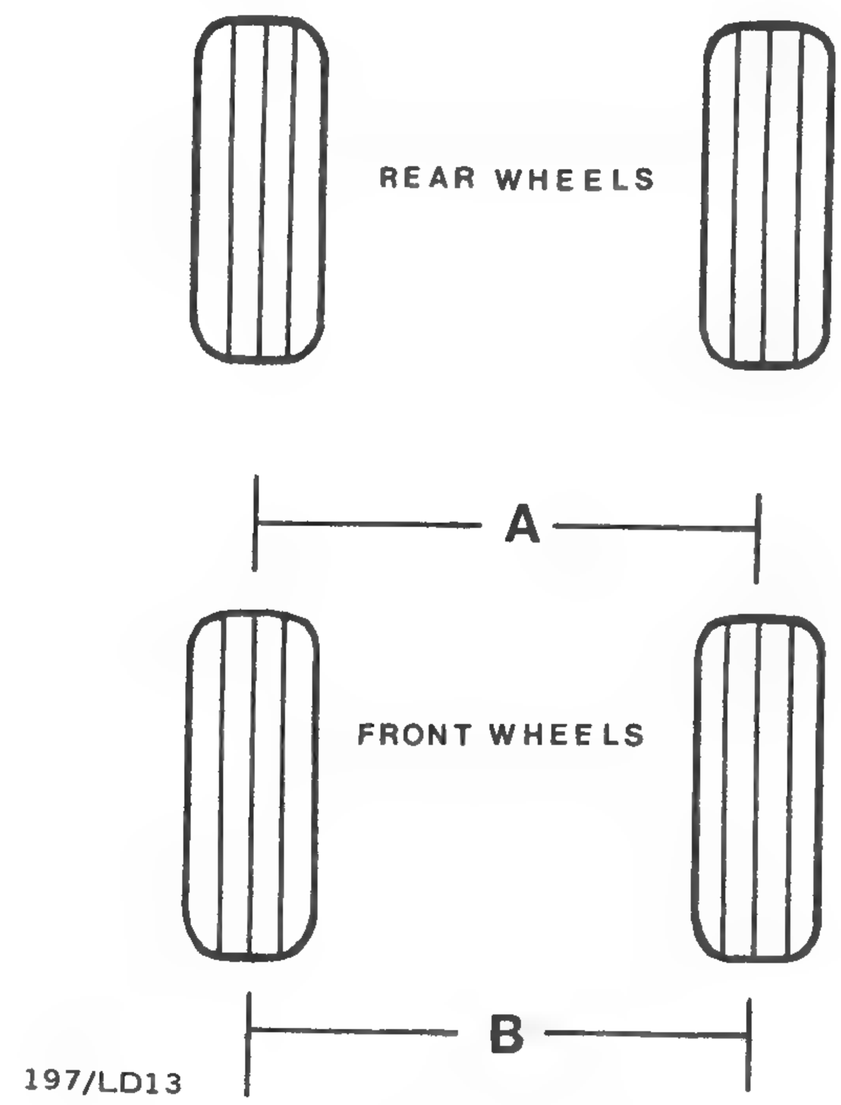

Diagram indicating front wheel toe in. Refer to Specifications for the correct difference between measurement A and B.

TO CHECK AND ADJUST TOE IN

(1) With the vehicle on a level floor, jack up the front of the vehicle and support on safety stands.

(2) Spin each front wheel in turn and using a piece of chalk, mark a line around the periphery of each tyre as near to the centre as possible.

(3) Lower the front of the vehicle to the floor and bounce the vehicle up and down several times and let it find its own level. Set the wheels in the straight ahead position.

(4) Mark the centre chalk line on both tyres at approximately 20 to 25 cm above the floor in front of the front suspension.

(5) Using a suitable length of rod, place it between the two front tyres on the chalk marks and record the distance between the centres of the tyres.

(6) Maintaining the wheels in a straight ahead position, roll the vehicle forward until the chalk marks are the same distance above the floor, but to the rear of the front suspension.

(7) Again use the rod to measure and record the distance between the centres of the tyres.

(8) The distance measured at the front of the suspension should be the same as that measured at the rear of the suspension. A 3 mm tolerance either side of zero is permissible. See Specifications.

(9) If adjustment of the toe in is necessary, loosen the outer steering gear boot clips on both sides and loosen the tie rod end locknuts also on both sides.

(10) Adjust the tie rods as required until the correct toe in is reached.

NOTE: It is important to make equal adjustments to each tie rod to maintain the central position of the steering gear.

(11) Tighten the tie rod end locknuts without changing the positions of the tie rods.

(12) Tighten the outer steering gear boot clips ensuring that the boots are not twisted or deformed.

SPECIFICATIONS

Type	Independent McPherson strut type with coil springs
Shock absorbers	Non-repairable telescopic
Hub bearing turning torque	0.4–1.0 kg
Rear wheel alignment	Zero

TORQUE WRENCH SETTINGS

Piston rod nut	74 Nm
Suspension unit to body nuts	27 Nm
Stub axle to suspension unit	45 Nm
Stabiliser to trailing arm	45 Nm
Control arm to crossmember	74 Nm
Control arm to stub axle	74 Nm
Trailing arm to body	45 Nm
Trailing arm to stub axle	45 Nm
Brake backing plate to stub axle bolts	66 Nm

1. REAR SUSPENSION TROUBLE SHOOTING

REAR END NOISE

(1) Defective shock absorber or mounting: Renew faulty components.

(2) Loose or worn control arm bushes or pivot bolts: Check and tighten or renew worn components.

(3) Broken coil spring: Renew coil spring, preferably in matching pairs.

(4) Worn rear hub bearings: Check and renew the hub bearings as necessary.

(5) Loose or worn trailing arm bushes or pivot bolts: Check and tighten or renew worn components.

NOTE: As a quick guide to shock absorber condition, bounce the vehicle up and down (one side at a time) and observe if the vehicle comes to rest in a single movement. If the vehicle bounces two or three times before coming to rest the shock absorber is suspect. If suspect, remove the shock absorber and check for fractures and leaks. If the shock absorber is found to be unserviceable it is good practice to instal two new shock absorbers as a matching pair.

To check control and trailing arm bushes or pivot bolts, insert a lever between the suspect unit and its mounting and lever the unit back and forth checking for excessive movement.

Check the coil springs visually for breaks. If the spring is found to be unserviceable it is good practice to instal two new coil springs as a matching pair.

Rear hub bearing noise can be diagnosed by raising and supporting the rear of the vehicle spinning one wheel at a time and listening for a rumble.

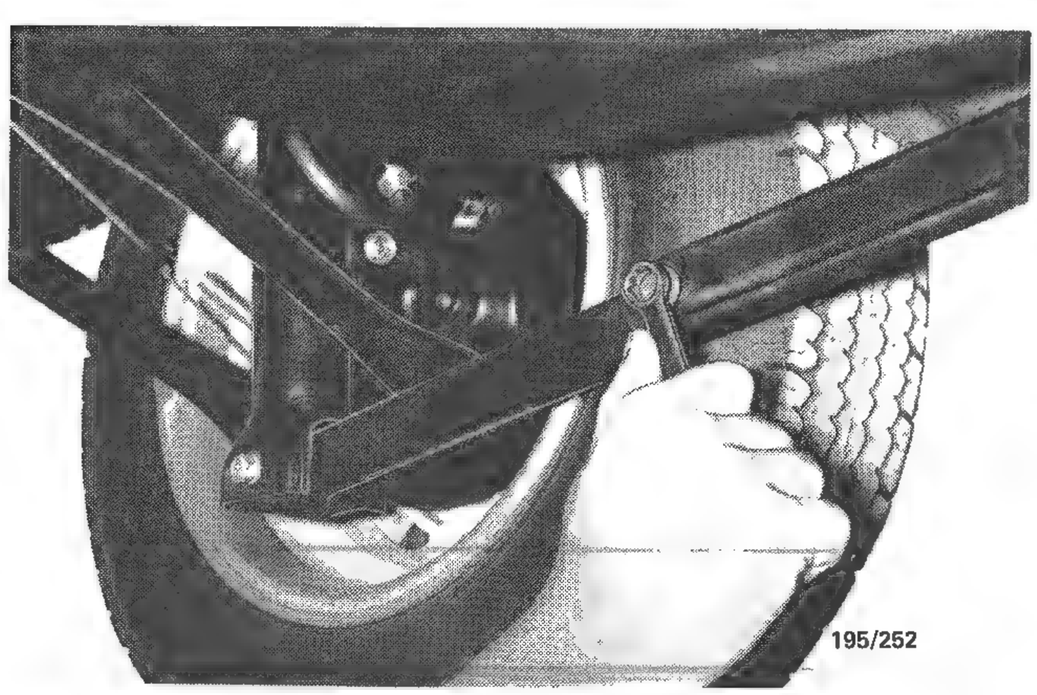

Checking the tightness of the nuts and bolts connecting the stabiliser bar to the trailing arm.

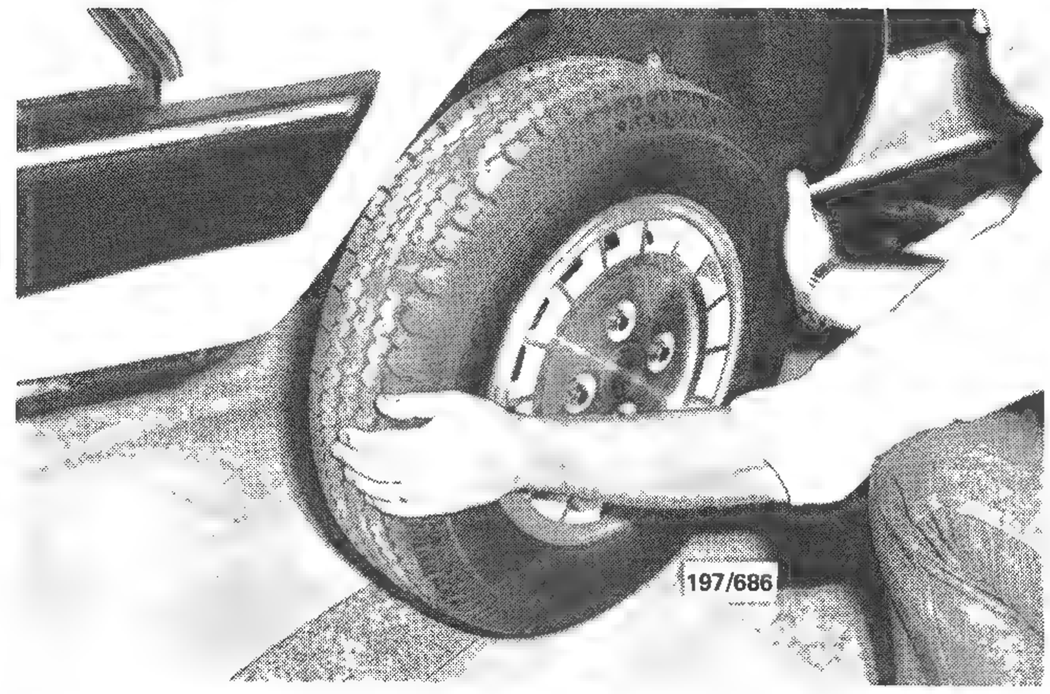

Rear hub bearing noise can be diagnosed by spinning one wheel at a time and listening for a rumble.

POOR OR ERRATIC ROAD HOLDING ABILITY

(1) Low or uneven tyre pressures: Inflate to recommended pressures.

(2) Incorrect rear wheel alignment: Check and adjust rear wheel alignment as necessary.

(3) Defective shock absorber: Renew faulty shock absorber, preferably in pairs.

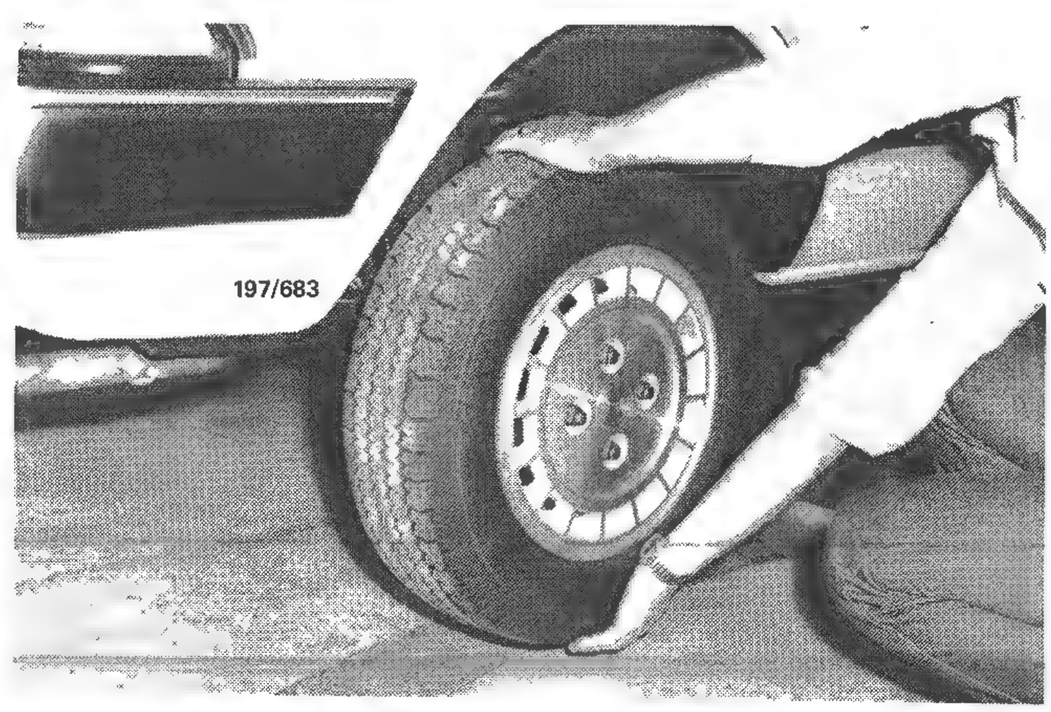

Excessive free play in the rear hub bearings may be cause of poor or erratic road holding ability.

(4) Loose or broken stabiliser bar: Check and tighten or renew faulty components.

(5) Loose or worn control arm bushes or pivot bolts: Check and tighten or renew worn components.

(6) Loose or worn trailing arm bushes or pivot bolts: Check and tighten or renew worn components.

(7) Loose rear hub bearings: Check and adjust the rear hub bearings.

NOTE: Check the serviceability of the shock absorbers and the trailing and control arm bushes and pivot bolts as previously described.

If incorrect rear wheel alignment is suspected, it is recommended that the vehicle be taken to a wheel alignment specialist or Ford dealer to be checked and if necessary adjusted.

Visually inspect the stabiliser bar for breaks.

2. DESCRIPTION

Each rear suspension unit comprises of a sealed shock absorber unit surrounded at the upper end by a tapered coil spring, on top of which is an upper mounting assembly attached to the underside of the rear wheel housing. The piston rod of the shock absorber is in turn attached to the centre of the spring upper mounting assembly.

To the lower end of the shock absorber are attached a trailing arm and a stub axle. The trailing arm is mounted to the body forward of the rear suspension. The brake backing plate and the rear hub assembly is mounted on the stub axle.

Two offset control arms each side are attached to the stub axle and the crossmember and, with the aid of the trailing arm, maintain the stub axle in the required position. Both the rear control arms are attached to the crossmember through an eccentric serrated spacer, which is offset 2 mm to allow for adjustment of the rear wheel toe in.

All models have a stabiliser bar attached to each trailing arm to improve the riding qualities of the rear suspension units.

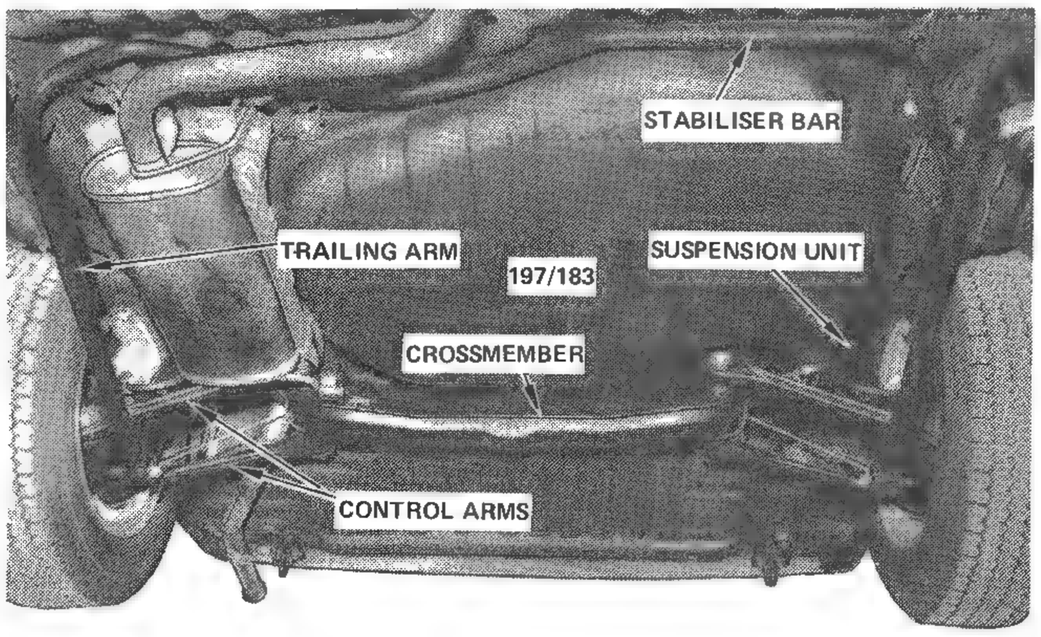

Underbody view of the rear of the vehicle showing the installed locations of the rear suspension components.

3. REAR HUB

Special Equipment Required:
To Adjust Hub Bearings – Spring scale

TO REMOVE AND DISMANTLE

(1) Raise the rear of the vehicle and support on safety stands. Remove the road wheel.

(2) Release the handbrake and using a suitable lever, remove the hub grease cap from the rear hub.

(3) Using a hammer and a suitable drift, bend back the staking on the hub retaining nut and remove the hub retaining nut, the washer and the outer bearing cone from the stub axle.

(4) Withdraw the brake drum and hub assembly from the stub axle.

NOTE: If difficulty is incurred during the removal of the brake drum and hub assembly from the stub axle, remove the handbrake clevis pin and the handbrake lever stop. Refer to Brakes section if necessary.

(5) Using a suitable lever, remove the grease seal and remove the inner bearing cone from the hub.

NOTE: If the hub bearings are being removed for repacking only, it will not be necessary to remove the inner and outer bearing cups as described in the following operation.

(6) Suitably support the hub assembly and using a soft drift, tap the inner and outer bearing cups out of the hub. The inner bearing cup is removed from the inner end of the hub and the outer bearing cup from the outer end of the hub.

(7) Remove all the old grease and wash all the components in a suitable cleaning solvent.

NOTE: Do not spin the bearings with compressed air as damage to the wheel bearings and/or injury to the operator may result.

(8) Check the bearing rollers and cups for wear, pitting and damage and renew as necessary.

NOTE: Individual components of bearings should not be renewed separately. If any part of a bearing is faulty the complete bearing must be renewed.

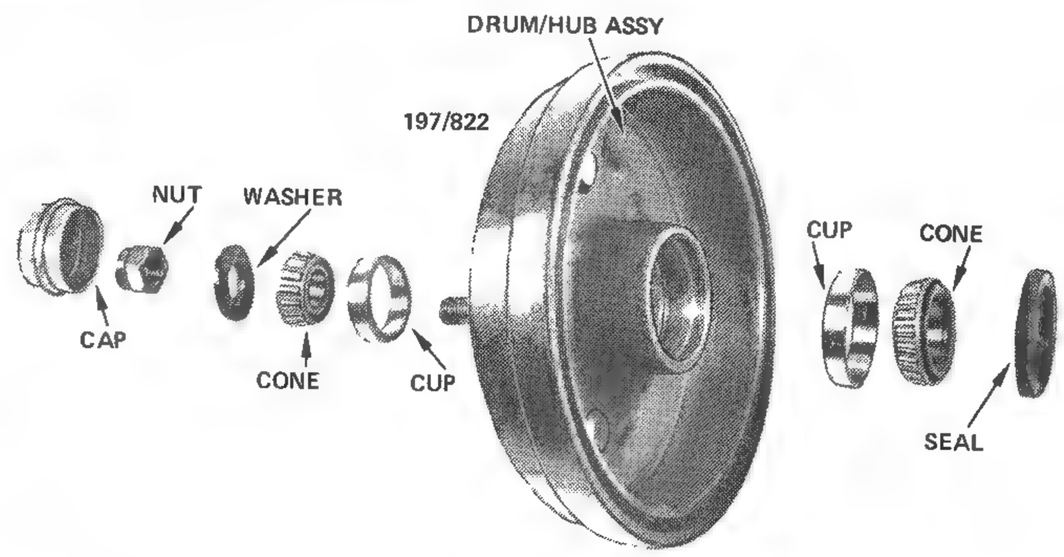

Dismantled view of the rear hub assembly.

Pack the wheel bearings by thoroughly working grease between the rollers and the inner race and roller cage.

TO ASSEMBLE AND INSTAL

Assembly and installation is a reversal of the removal and dismantling procedure with attention to the following points:

(1) Using a soft drift, instal the inner and outer bearing cups in the hub with their tapers opposed to each other.

(2) Pack the hub bearings by thoroughly working grease between the rollers, the inner race and the roller cage. Refer to the Lubrication and Maintenance section for the correct type of grease to be used.

(3) Instal the inner bearing cone into position in the hub. Place a new grease seal in the inner end of the hub, with the grease seal lips adequately coated with grease, and tap the seal into position.

(4) Instal the hub assembly onto the stub axle and position the outer bearing cone in the outer end of the hub.

(5) Instal the washer and a new hub retaining nut onto the stub axle to retain the assembly in position.

(6) Position a spring scale onto a road wheel stud. Tighten the hub retaining nut while rotating the hub until the specified turning torque is achieved.

(7) Using a suitable drift, stake the hub retaining nut to prevent the nut loosening during service.

(8) Instal the hub grease cap and the road wheel, and lower the vehicle to the ground.

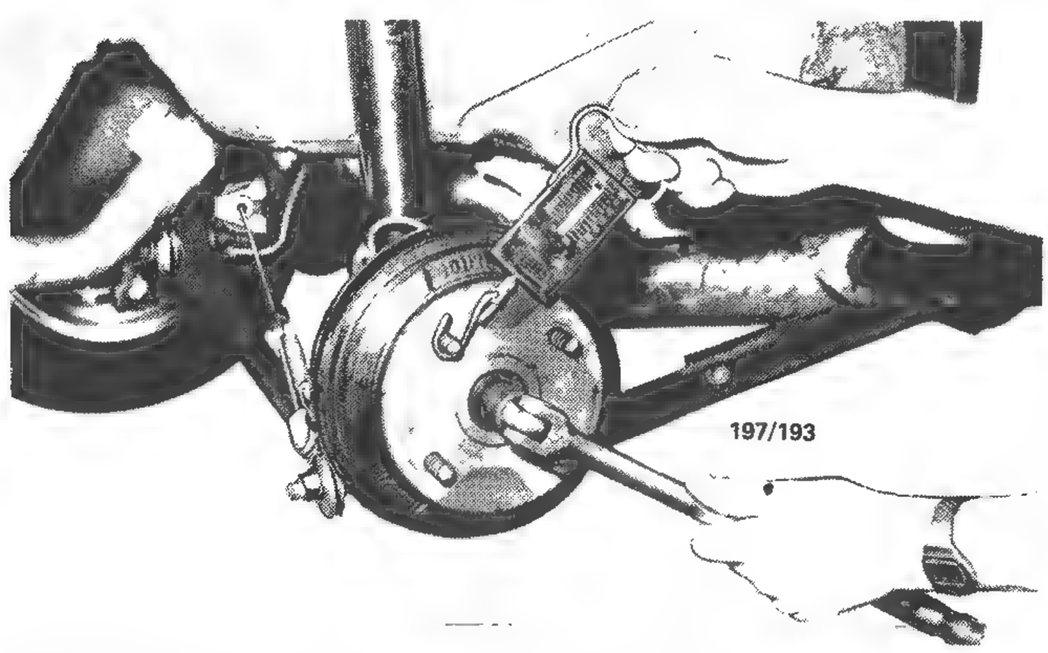

Adjust the rear hub bearings using a spring scale to check the hub turning torque.

4. SUSPENSION UNIT AND STUB AXLE

Special Equipment Required:
To Dismantle and Assemble – Spring compressor
To Adjust Hub Bearings – Spring scale

TO REMOVE AND DISMANTLE

(1) Working inside the rear luggage compartment remove the relevant side trim panel to gain access to the suspension unit upper mounting retaining nuts.

(2) Remove the two suspension unit upper mounting retaining nuts.

(3) Raise the rear of the vehicle and support on safety stands positioned under the rear jacking points. Remove the road wheel.

(4) Withdraw the rear hub assembly from the stub axle as previously described under the Rear Hub heading.

(5) Disconnect the brake pipe from the brake hose at the suspension unit, remove the clip retaining the brake hose to the suspension unit and plug the brake hose and pipe to prevent the loss of fluid and the ingress of dirt.

(6) Remove the handbrake clevis pin and disconnect the handbrake cable from the handbrake lever. Dis-

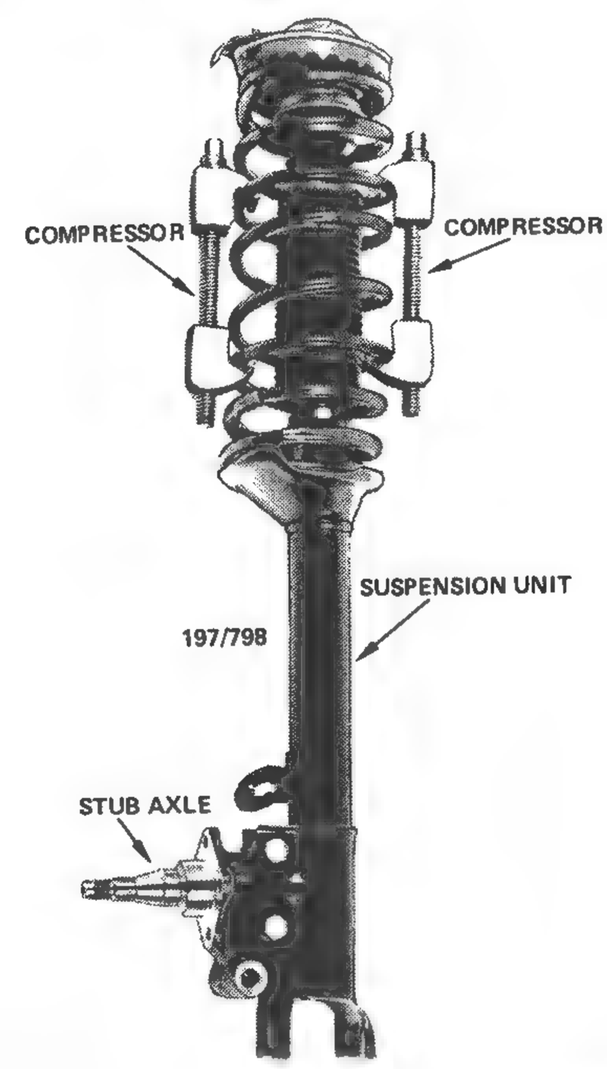

Suspension unit removed from the vehicle, showing spring compressor fitted.

connect the handbrake cable return spring from the brake backing plate.

(7) Remove the pivot bolt connecting the control arms to the stub axle.

(8) Remove the two bolts connecting the stub axle to the suspension unit and remove the stub axle from the vehicle. If necessary remove the four bolts retaining the brake backing plate to the stub axle and separate the components.

(9) Remove the pivot bolt connecting the trailing arm to the suspension unit and remove the suspension unit from the vehicle.

(10) Thoroughly clean the suspension unit and position the lower part of the suspension unit in a vice fitted with protective vice plates.

(11) Using a suitable spring compressor, compress the coil spring and remove the piston rod nut.

(12) Withdraw the upper mounting assembly, the coil spring and the dust cover from the shock absorber.

(13) Noting their installed positions dismantle the upper mounting assembly, check all components for wear and damage and renew as necessary.

(14) Inspect the coil spring for cracks and fatigue, compare the free length with a new coil spring and renew as necessary.

(15) Check the hydraulic operation of the shock absorber. With the shock absorber vertical, move the piston rod up and down several times. A firm pressure with no slack spots should be evident in both directions, also check the shock absorber for fluid leakage. If the leakage is excessive and/or no pressure is felt the shock absorber should be renewed, preferably in pairs.

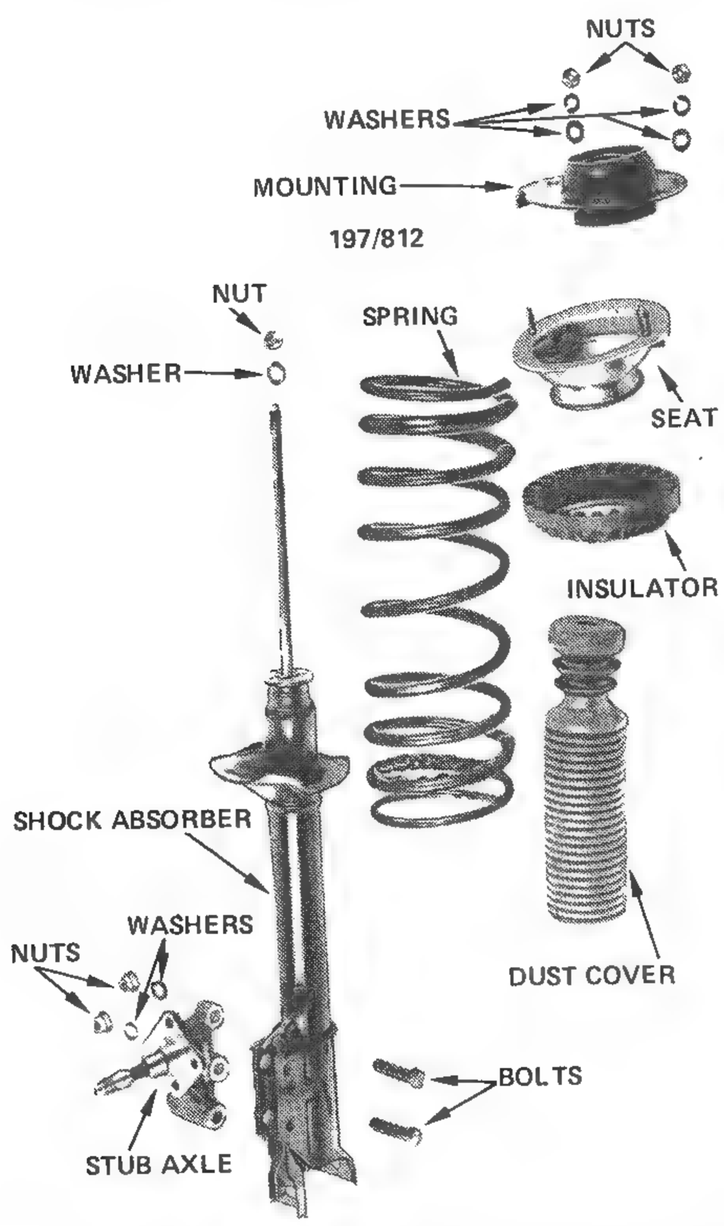

Dismantled view of the rear suspension unit.

(16) Thoroughly clean the stub axle and inspect for cracks and damage. Also inspect the pivot bolts removed during the removal procedure for wear and damage. Renew any worn or damaged component as necessary.

TO ASSEMBLE AND INSTAL

Assembly and installation is a reversal of the removal and dismantling procedure with attention to the following points:

(1) Assemble the upper mounting assembly as noted during the dismantling procedure.

(2) Position the dust cover, the coil spring and the upper mounting assembly onto the shock absorber. Ensure that the coil spring is correctly seated in its upper and lower seats and insulators.

(3) Instal and tighten the piston rod nut to the specified torque and remove the spring compressor.

(4) Position the suspension unit inside the rear wheel housing in its installed position. With the aid of an assistant instal and tighten the upper mounting to body retaining nuts to the specified torque.

(5) Connect the trailing arm and instal the pivot bolt and nut. Do not tighten the pivot bolt at this stage.

(6) Position the stub axle onto the suspension unit and instal and tighten the two stub axle to suspension unit retaining bolts to the specified torque. Instal the brake backing plate to the stub axle and tighten the four retaining bolts to the specified torque.

(7) Connect the control arms and instal the pivot bolt and nut. Do not tighten the pivot bolt at this stage.

(8) Connect the handbrake cable to the handbrake lever and instal the clevis pin. Use a new split pin to retain the clevis pin in position. Connect the handbrake cable return spring to the brake backing plate.

(9) Position the brake hose in the bracket on the suspension unit and retain in position with the clip. Connect the brake pipe to the brake hose and tighten securely.

(10) Instal the rear hub assembly onto the stub axle and adjust the hub bearings as previously described under the Rear Hub heading.

(11) Bleed the brake hydraulic system, refer to the Brakes section for the correct procedure.

(12) Instal the road wheel and lower the vehicle to the ground. Tighten the control arm and the trailing arm pivot bolts to the specified torque when the weight of the vehicle is on the road wheels. Instal the trim panel in the luggage compartment.

5. TRAILING ARM

TO REMOVE AND INSTAL

(1) Raise the rear of the vehicle and support on safety stands placed underneath the rear jacking points. Remove the road wheel.

(2) Remove the pivot bolt connecting the trailing arm to the suspension unit.

(3) Remove the nuts and bolt connecting the stabiliser bar to the trailing arm.

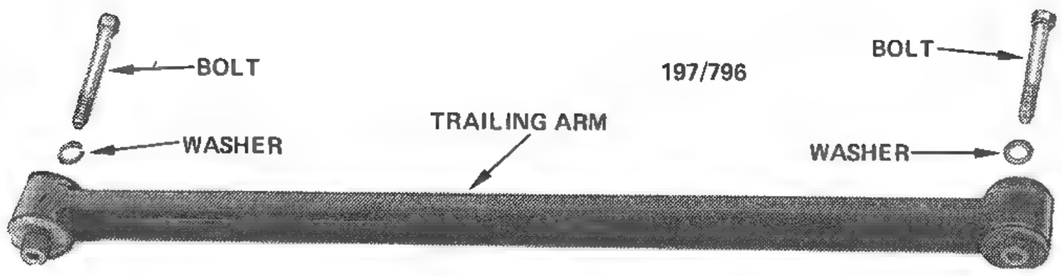

View of trailing arm removed from the vehicle.

(4) Remove the pivot bolt connecting the trailing arm to the body and remove the trailing arm from the vehicle.

(5) Inspect the trailing arm bushes for wear and deterioration. If the trailing arm bushes are unserviceable a new trailing arm must be installed.

(6) Inspect the trailing arm for cracks and damage, renew as necessary.

Installation is a reversal of the removal procedure with attention to the following points:

(1) Position the trailing arm over the stabiliser stud prior to installing the trailing arm front and rear pivot bolts.

(2) Tighten the trailing arm front and rear pivot bolts to the specified torque when the weight of the vehicle is on the road wheels.

(3) If a new trailing arm was installed, the vehicle should be taken to a wheel alignment specialist to have the rear wheel toe in checked and if necessary adjusted.

6. CONTROL ARMS

TO REMOVE AND INSTAL

(1) Raise the rear of the vehicle and support on safety stands placed underneath the rear jacking points. Remove the road wheel.

(2) Remove the pivot bolt connecting the control arms to the stub axle.

(3) Suitably mark both control arms so that they may be returned to their original positions.

(4) Scribe a line across the eccentric serrated spacer and the crossmember, to ensure that the serrated spacer is returned to its original position.

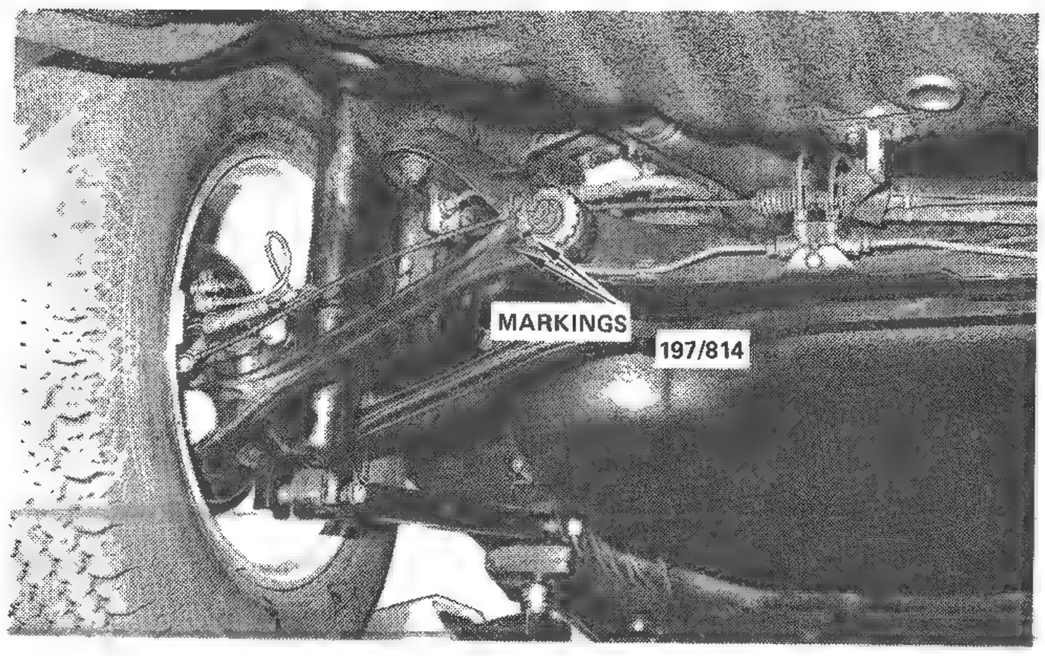

Ensure that the eccentric serrated spacer is suitably marked prior to loosening the pivot bolt nut.

NOTE: If the eccentric serrated spacer is not returned to its original position, the rear wheel toe in will have to be adjusted.

(5) Remove the nut and the washers from the pivot bolt and remove the rear control arm.

(6) If removing the right hand side front control arm it will be necessary to lower the exhaust tail pipe to facilitate the withdrawal of the pivot bolt.

(7) If removing the left hand side front control arm it will be necessary to either remove the fuel tank or lower the rear suspension crossmember to facilitate the withdrawal of the pivot bolt.

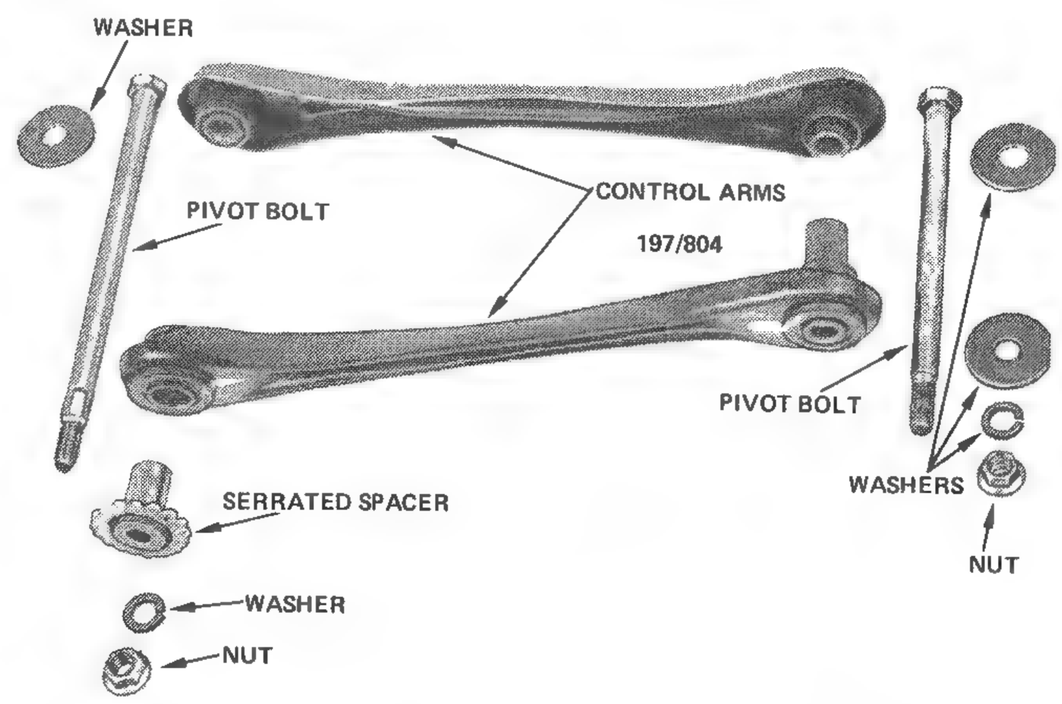

Dismantled view of the control arms and associated components.

NOTE: Refer to the Fuel section for the removal and installation of the fuel tank.

Prior to lowering the crossmember, disconnect the two upper brake pipes from the junction block.

(8) Remove the front control arm from the vehicle.

(9) Inspect both the control arm bushes for wear and deterioration. If the control arm bushes are unserviceable a new control arm must be installed.

(10) Inspect both the control arms for cracks and damage, renew as necessary.

Installation is a reversal of the removal procedure with attention to the following points:

(1) Ensure that the front and rear control arms are returned to their original position.

(2) Ensure that the lines scribed on the eccentric serrated spacer and the crossmember are aligned.

(3) Tighten the control arms inner and outer pivot bolts to the specified torque when the weight of the vehicle is on the road wheels.

(4) If a new control arm was installed, the vehicle should be taken to a wheel alignment specialist to have the rear wheel toe in checked and if necessary adjusted.

7. STABILISER BAR

TO REMOVE AND INSTAL

(1) Raise the rear of the vehicle and support on safety stands positioned under the rear jacking points. Remove both the rear road wheels.

(2) Remove the exhaust tail pipe from the front muffler, refer to the Engine section if necessary.

NOTE: If the vehicle is raised on a hoist it will not be necessary to remove the tail pipe as adequate ground clearance will be obtained.

(3) Remove the nuts and bolts connecting the stabiliser bar to the left and right hand side trailing arm.

(4) Using a suitable lever, lever the stabiliser bar away from the left hand side trailing arm to disconnect the stud on the stabiliser bar from the trailing arm.

(5) Disconnect the stud on the stabiliser bar from the other trailing arm and manoeuvre the stabiliser bar from the vehicle.

(6) Inspect the stabiliser bar for cracks and damage and renew if necessary.

Installation is a reversal of the removal procedure ensuring that the nuts and bolts connecting the stabiliser bar to the trailing arms are tightened to the specified torque.

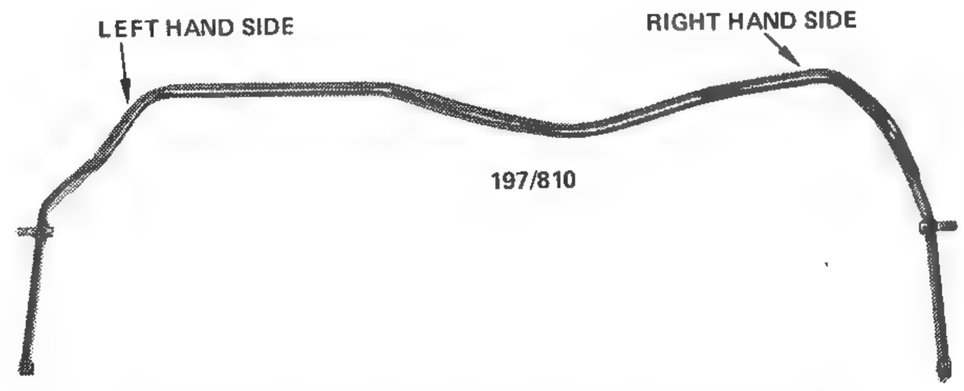

View of the stabiliser bar removed from the vehicle.

Refer to supplement for more information

BRAKES

SPECIFICATIONS

Type:
- Front ..... Disc
- Rear ..... Drum

Operation:
- Footbrake ..... Vacuum assisted diagonally split dual hydraulic circuit
- Handbrake ..... Mechanical on rear wheels

Front brake:
- Disc diameter ..... 227 mm
- Disc thickness – minimum ..... 10 mm
- Disc runout – maximum ..... 0.1 mm
- Brake pad thickness – minimum ..... 1.0 mm

Rear brake:
- Drum diameter ..... 180 mm
- Wheel cylinder bore diameter ..... 17.46 mm
- Brake lining thickness – minimum ..... 1.0 mm

Brake pedal:
- Height ..... 215–220 mm
- Free play ..... 7–9 mm

Master cylinder to servo unit pushrod clearance ..... 0.1–0.5 mm

TORQUE WRENCH SETTINGS

Caliper mounting bolts ..... 65 Nm
Caliper slide pins ..... 54 Nm

1. BRAKES TROUBLE SHOOTING

BRAKE PEDAL HARD

(1) Incorrect brake pads or brake shoes installed: Check and renew with the recommended type.

(2) Siezed brake pedal pivot: Free off or renew pivot bolt and bushes.

(3) Restricted brake pipe from master cylinder: Check brake pipes and remove the restriction or renew the pipe.

(4) Siezed wheel cylinder or caliper piston: Overhaul wheel cylinder or caliper.

(5) Brake servo unit system inoperative: Check servo system and rectify as necessary.

NOTE: The brake servo unit system can be checked out as follows:

With the engine switched off, pump the brake pedal several times to deplete any vacuum in the system.

With the engine still switched off press down firmly on the brake pedal and hold it there noting the position and the pressure required.

Holding down on the brake pedal start the engine. If the servo unit system is operating correctly the brake pedal will sink slightly and the pressure required to hold it may even reduce. If the brake pedal does not sink slightly when the engine is started then the brake servo unit system can be considered inoperative.

BRAKE DRAG

(1) Clogged master cylinder ports: Check and clean the master cylinder and fluid reservoir.

(2) Siezed wheel cylinder or caliper piston: Overhaul the wheel cylinder or caliper.

(3) Siezed handbrake cable: Free off or renew the handbrake cable.

(4) Broken or stretched brake shoe return springs: Check and renew defective springs as necessary.

(5) Maladjusted servo unit or master cylinder pushrods: Check and adjust pushrods as necessary.

NOTE: To check out this condition, raise the front and rear of the vehicle and support on safety stands. Spin all wheels and check for binding. If the wheels are not binding, have an assistant apply and release the brakes and check that the brakes are releasing immediately. A clogged master cylinder port will cause binding on the two wheels fed by that particular circuit from the master cylinder. Open the bleeder valve on one of the offending wheels to check if pressure build up is the

Checking out the vacuum servo system.

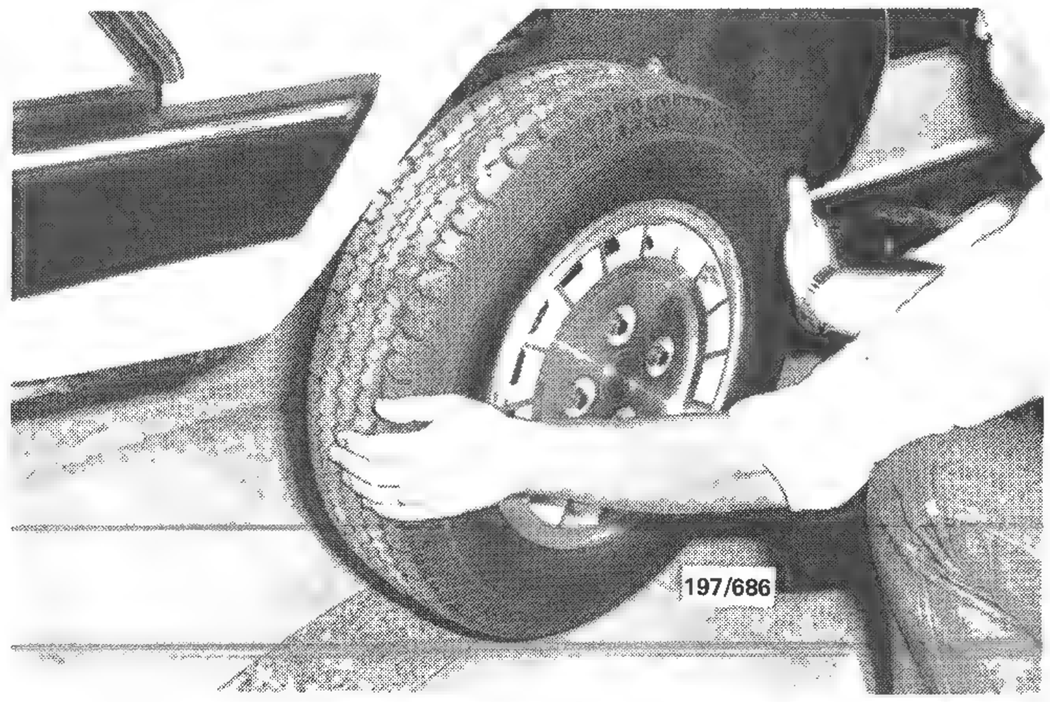

Spin each wheel by hand to check for binding brakes.

cause of the binding. A siezed handbrake cable will cause binding to both rear wheels. To check out this condition, disconnect the handbrake cables from the handbrake actuating levers and check if the wheels will then turn freely.

LOW OR SPONGY BRAKE PEDAL

(1) Air in the hydraulic system: Trace and rectify leak and bleed hydraulic system.

(2) Inoperative rear brake self adjuster system: Free off or renew self adjuster as necessary.

(3) Rear brake shoe linings worn below limits: Renew rear brake shoes.

(4) Maladjusted servo unit or master cylinder pushrods: Check and adjust pushrods as necessary.

NOTE: Remove the rear brake drums and inspect the condition of the brake shoe linings and the operation of the rear brake self adjuster.

For air to enter the system, one or more of the seals or pipes must be sucking in air. Always rectify the leak prior to bleeding the hydraulic system. Faulty components usually show up as fluid leakage around the faulty components.

BRAKES LOCK ON APPLICATION

(1) Gummy brake shoe linings or brake pads due to grease or fluid contamination: Renew brake shoes or brake pads.

(2) Warped or out of round brake drums: Check, machine or renew brake drums.

(3) Incorrect brake shoes or pads installed: Check and renew with the recommended type.

(4) Broken or stretched brake shoe return springs: Check and renew faulty shoe return springs.

(5) Faulty pressure proportioning valve: Renew faulty valve.

NOTE: If this condition arises, remove all the road wheels and rear brake drums and check the condition of the friction material for contamination and wear. Check the brake shoe return springs for stretching by comparing their free length with new springs. An out of round or warped brake drum will be indicated by pulsating on the brake pedal when the brakes are lightly applied.

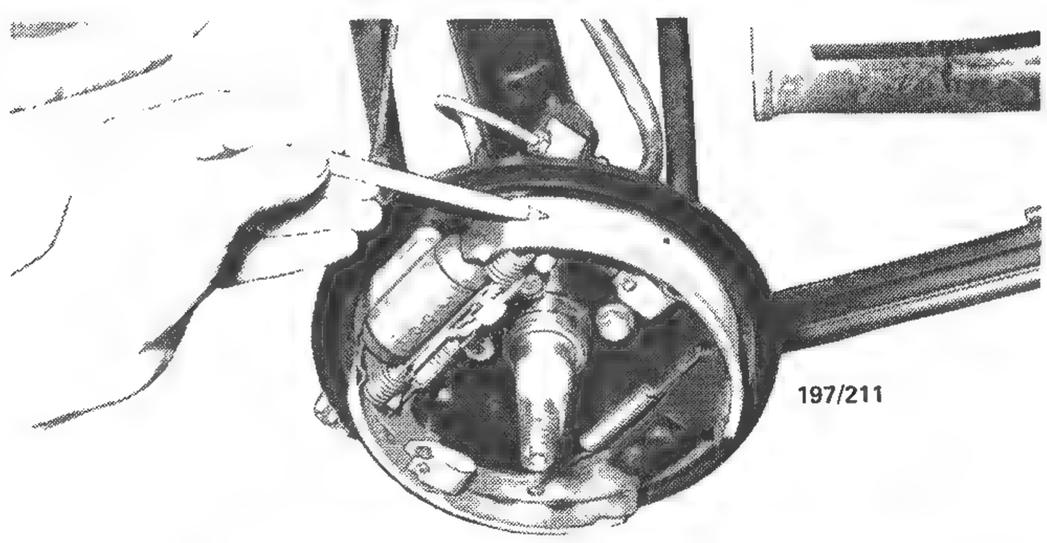

Inspect the brake shoe linings for wear and contamination.

BRAKE PEDAL PULSATES

(1) Warped or out of round brake drum or disc: Check, machine or renew brake drum or disc.

(2) Loose or worn front or rear hub bearings: Adjust or renew hub bearings as necessary.

(3) Bent rear stub axle: Renew rear stub axle.

NOTE: Brake drums or discs that prove to be running out must be machined. This job is best entrusted to a brake specialist who will also be able to determine if a new drum or disc needs to be installed.

BRAKE FADE

(1) Malfunction of the rear brake self adjuster: Repair or renew self adjuster as necessary.

(2) Incorrect brake shoes or pads installed: Check and renew with the recommended type.

(3) Gummy brake shoe linings or brake pads due to grease or fluid contamination: Renew brake shoes or brake pads.

(4) Warped or out of round brake drum or disc: Check, machine or renew brake drum or disc.

(5) Contaminated hydraulic brake fluid: Drain, refill and bleed hydraulic system.

NOTE: In most cases brake fade is caused by overuse of the brakes, which in turn causes a build up of heat at the friction material and the drums or discs. Once this excessive build up of heat is allowed to dissipate the brakes should again function normally.

BRAKES OVERHEAT

(1) Malfunction of the rear brake self adjuster: Repair or renew self adjuster as necessary.

(2) Broken or stretched brake shoe return springs: Check and renew faulty shoe return springs.

(3) Maladjusted servo unit or master cylinder pushrods: Check and adjust pushrods as necessary.

(4) Siezed wheel cylinder or caliper pistons: Overhaul wheel cylinder or caliper.

(5) Obstructed or damaged brake hose or pipe: Remove the obstruction or renew brake hose or pipe.

(6) Blocked vent in master cylinder reservoir cap: Check and remove obstruction.

(7) Clogged master cylinder ports: Check and clean master cylinder and fluid reservoir.

(8) Overuse of brakes: Revise driving habits.

NOTE: To check for brake binding raise the vehicle and spin each wheel in turn by hand. If it is found that one wheel cylinder or caliper piston is sticking it is advisable to overhaul all

wheel cylinders and calipers including the master cylinder.

BRAKE FAILURE

(1) Faulty master cylinder: Remove and overhaul the master cylinder and bleed the hydraulic system.

(2) Loss of fluid due to leaking caliper: Overhaul the caliper and bleed the hydraulic system.

(3) Loss of fluid due to leaking wheel cylinder: Overhaul the wheel cylinder and bleed the hydraulic system.

(4) Loss of fluid due to leaking brake pipe or hose: Renew faulty component and bleed the hydraulic system.

(5) Air in hydraulic system: Locate source of air leak, rectify and bleed the hydraulic system.

(6) Contaminated hydraulic brake fluid: Drain, refill and bleed the hydraulic system.

NOTE: To locate the source of a fluid leak, fill the master cylinder with brake fluid and have an assistant pump the brake pedal whilst checking for obvious signs of external leakage prior to dismantling and overhauling the braking system.

BRAKE NOISE

(1) Brakes squeal on application: Glazed friction material. Remove and inspect the brake pads and deglaze the friction material with emery paper.

(2) Grinding noise on application: Friction material worn away. Inspect the friction material on the brake pads and shoes, renew the brake pads or shoes as necessary and machine or renew the brake drum or disc.

NOTE: Brake squeal in most cases is caused by the friction material on the brake pads or shoes becoming glazed. Unsuitable friction material or the omission of anti-squeal shims or anti-rattle springs may also cause brake noise.

If the brake pads or shoes are worn to metal always renew either the brake pads or shoes as a complete set of four. If scored, the brake drum or disc will have to be machined or renewed otherwise braking efficiency will be impaired.

2. DESCRIPTION

The brakes are applied by hydraulic pressure in two independent circuits by means of a tandem dual circuit master cylinder. The circuits are split diagonally, the left hand front and the right hand rear brakes are connected in one circuit while the right hand front and the left hand rear brakes are connected in the other circuit. Should a malfunction occur in one circuit, the remaining circuit is capable of stopping the vehicle safely.

The four wheel hydraulically operated brakes utilise leading and trailing brake shoes on each rear wheel and disc brakes on each front wheel.

The leading and trailing shoe type brakes on the rear wheels use a double ended wheel cylinder to operate both brake shoes at the top. The lower end of each brake shoe abuts a fixed anchor point. The brake shoes are automatically adjusted when the brakes are operated.

On all models a vacuum servo unit is installed between the master cylinder and the brake pedal on the bulkhead.

The front disc brakes comprise of a disc attached to the hub assembly and a caliper bolted to the steering knuckle. The caliper is of the sliding type. As pad wear takes place, the caliper piston is allowed to slide outwards through the seal to take up a new position in the caliper bore. When the brakes are in the off position, a constant clearance is maintained between the pads and the disc. Elastic deformation of the piston seal takes place when the brakes are applied which returns the piston to its normal off position when the brakes are released. The disc brakes do not require periodical adjustment in service to compensate for pad wear as they are self adjusting.

On all models a pressure proportioning valve is incorporated in the brake system. This proportioning valve is designed to prevent premature locking up of the rear wheels during severe braking.

3. MASTER CYLINDER

Special Equipment Required:
To Measure Pushrod Clearance – Vernier gauge

TO REMOVE

(1) Open the bonnet and fit fender covers to both front fenders.

(2) Disconnect the wiring for the fluid level sensor.

(3) Disconnect the brake pipes from the master cylinder and plug the pipes and the outlets to prevent the loss of fluid and the ingress of dirt.

(4) Remove the two nuts retaining the master cylinder to the brake servo unit and remove the master cylinder from the vehicle.

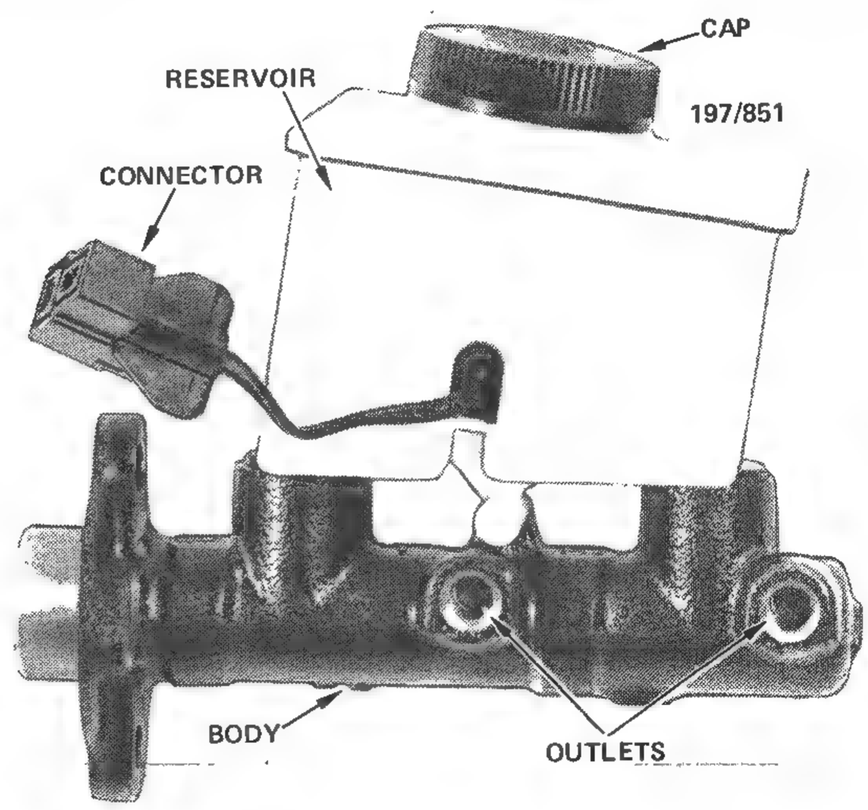

View of the master cylinder removed from the vehicle.

NOTE: Care should be exercised when removing or installing the master cylinder assembly to ensure that brake fluid is not spilt onto the paintwork of the vehicle. Brake fluid, if spilt, should be immediately washed away with water and then allowed to dry naturally.

TO CHECK AND ADJUST PUSHROD

(1) Measure the protrusion of the pushrod from the mounting surface for the master cylinder on the servo unit. See illustration. The measurement obtained will be dimension A. Note the dimension.

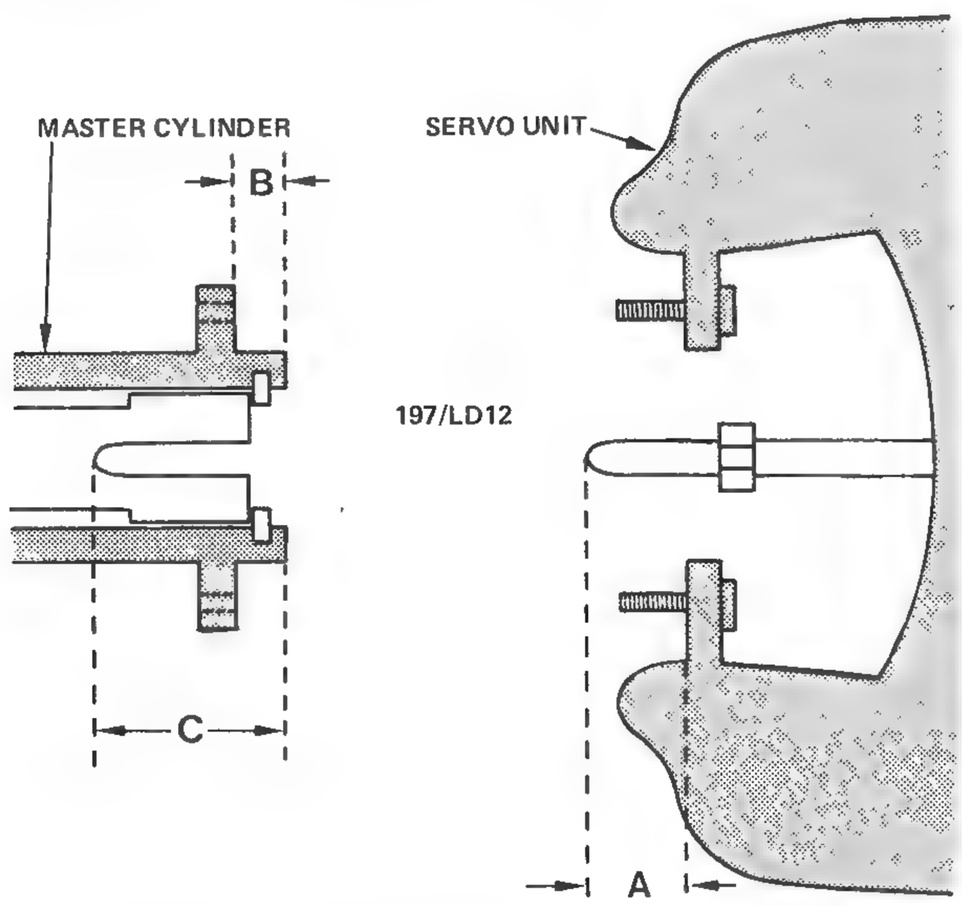

Illustration showing the measuring points for checking the master cylinder to servo unit pushrod clearance.

(2) Measure the distance from the mating surface for the servo unit on the master cylinder to the end of the master cylinder. See illustration. The measurement obtained will be dimension B. Note the dimension.

(3) Using the vernier gauge, measure the distance from the end of the master cylinder to the bottom of the hole in the piston. See illustration. The measurement obtained will be dimension C. Note the dimension.

(4) Apply the dimensions obtained to the following formula:

Pushrod clearance = (C – B) – A

(5) Compare the pushrod clearance obtained with Specifications.

(6) If necessary, loosen the locknut on the pushrod and adjust the protrusion of the pushrod until dimension A, when applied to the formula, will achieve the specified master cylinder to servo unit pushrod clearance. Tighten the locknut.

TO INSTAL

Installation is a reversal of the removal procedure with attention to the following points:

(1) Pour a small amount of clean brake fluid into the reservoir and pump the master cylinder pistons with a blunt rod until fluid begins to emerge from the outlets.

(2) Instal the master cylinder to the brake servo unit and instal the master cylinder retaining nuts, but do not tighten at this stage.

(3) Connect the brake pipes to the master cylinder outlets, but do not tighten at this stage. Ensure that the plugs, utilised to prevent the loss of fluid and the ingress of dirt, have been removed prior to connecting the brake pipes to the master cylinder.

(4) Securely tighten the nuts retaining the master cylinder to the brake servo unit.

(5) Securely tighten the brake pipes and connect the wiring for the fluid level sensor.

(6) Fill the master cylinder reservoir with clean brake fluid and bleed the brakes as described under the heading Hydraulic System – To Bleed.

TO DISMANTLE

(1) Remove the screw retaining the reservoir to the master cylinder and remove the reservoir and the grommets from the master cylinder.

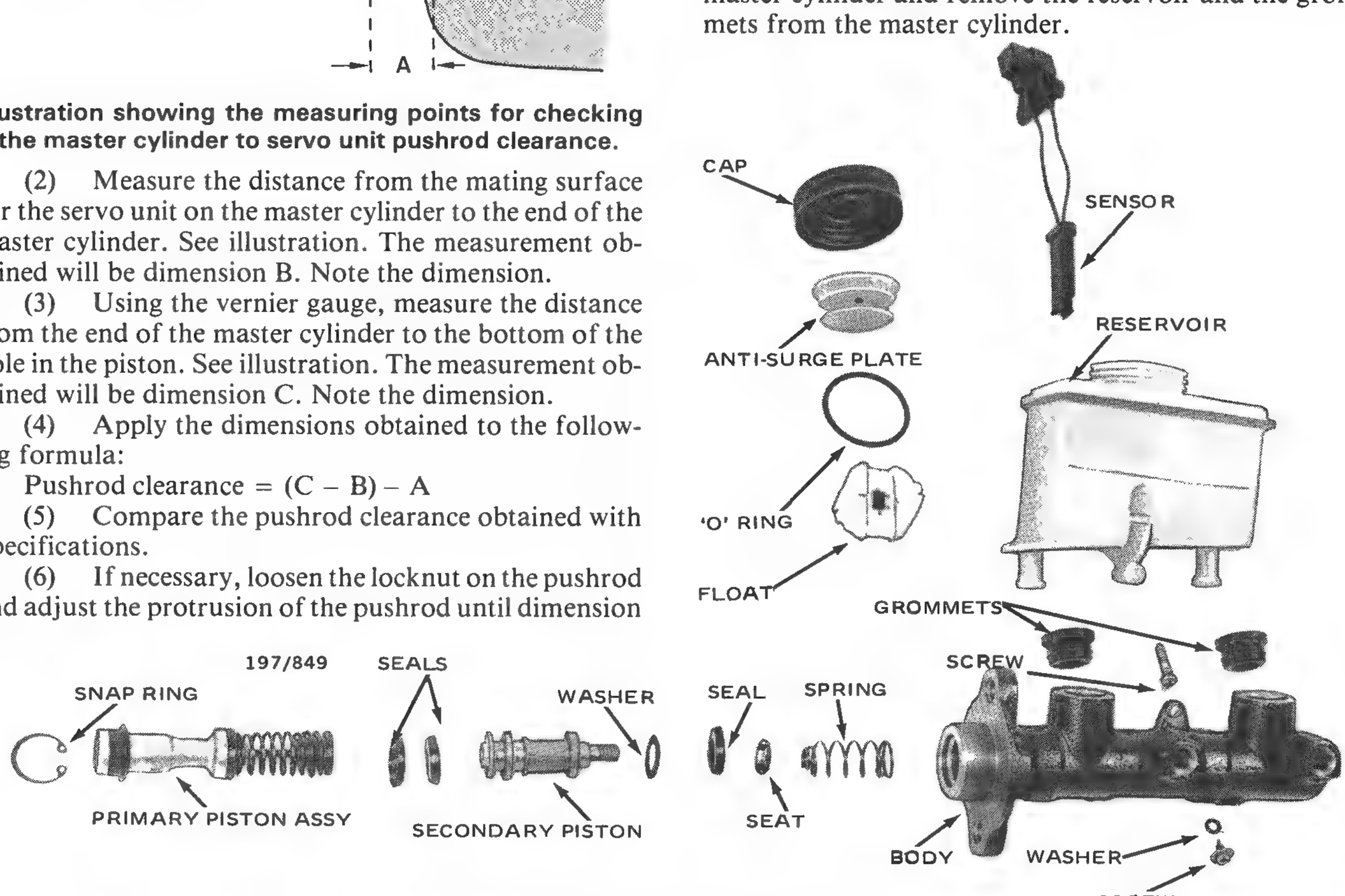

Dismantled view of master cylinder.

(2) Using a suitable blunt rod, depress the primary piston and remove the snap ring retaining the primary piston. Withdraw the primary piston assembly from the master cylinder bore.

NOTE: The primary piston assembly should not be dismantled as it is preset at manufacture and is only serviced as a complete primary piston assembly.

(3) Again using a blunt rod, depress the secondary piston and remove the stop screw located on the underside of the master cylinder.

(4) Tap the rear of the master cylinder on a piece of wood to dislodge the secondary piston from the master cylinder bore.

(5) If necessary, remove the spring, the seat, the seal and the washer from the front and the seals from the rear of the secondary piston. Note their installed positions.

TO CLEAN AND INSPECT

(1) Wash all components thoroughly in methylated spirits. Do not use petrol, kerosene or other cleaning solvents.

(2) Check the cylinder bore for wear, scoring or pitting.

NOTE: Do not hone the master cylinder bore. If the bore is pitted or worn renew the master cylinder as an assembly.

(3) Ensure that all inlet and compensating ports between the reservoirs and the cylinder bore are free of any obstruction.

(4) Discard all rubber parts and the piston assemblies.

NOTE: Where possible use a genuine major repair kit which contains preassembled rubber seals and pistons when overhauling a master cylinder. The use of a major kit will ensure a thorough overhaul and long service from the unit.

TO ASSEMBLE

Assembly is a reversal of the dismantling procedure with attention to the following points:

(1) Liberally lubricate the cylinder bore and all internal parts with clean brake fluid.

NOTE: Instal all the parts supplied with the repair kit.

(2) Instal one of the new larger internal diameter seals onto the middle groove of the secondary piston. Ensure that the lip of the seal faces the return spring end of the piston.

(3) Instal the remaining larger internal diameter seal onto the groove next to the middle seal on the secondary piston ensuring that the lip of the seal faces away from the middle seal.

(4) Instal the washer, the small internal diameter seal, the seat and the spring onto the front of the secondary piston. Ensure that the lip of the seal faces towards the spring and that the tapered end of the spring is correctly installed onto the piston.

(5) Insert the secondary piston assembly, spring end first, into the cylinder bore. Ensure that the seal lips are not turned back or damaged during this operation.

(6) Using a suitable blunt rod, push the secondary piston down against the spring tension and instal and tighten the stop screw.

(7) Insert a new primary piston assembly, spring end first, into the cylinder bore. Ensure that the seal lips are not turned back or damaged during this operation.

(8) Using a blunt rod, push the piston assemblies into the cylinder bore and instal a new snap ring into the groove in the cylinder bore.

(9) Using new grommets, instal the reservoir onto the master cylinder and instal and tighten the screw to retain the reservoir in position.

(10) Instal the master cylinder as previously described, paying particular attention to the checking and the adjusting of the master cylinder pushrod.

4. BRAKE SERVO UNIT

DESCRIPTION

The brake servo unit is installed between the brake pedal and the master cylinder.

The valve and rod assembly of the servo unit and the pedal pushrod are on the same axis and in case of a vacuum failure will act as a single pushrod without assistance.

The servo unit is connected by a hose to the inlet manifold, installed inside the hose is a one way check valve. The only items which will normally require attention will be the hose and the hose connections.

TO CHECK OPERATION

(1) With the engine switched off, apply the footbrake several times to exhaust all vacuum from the system.

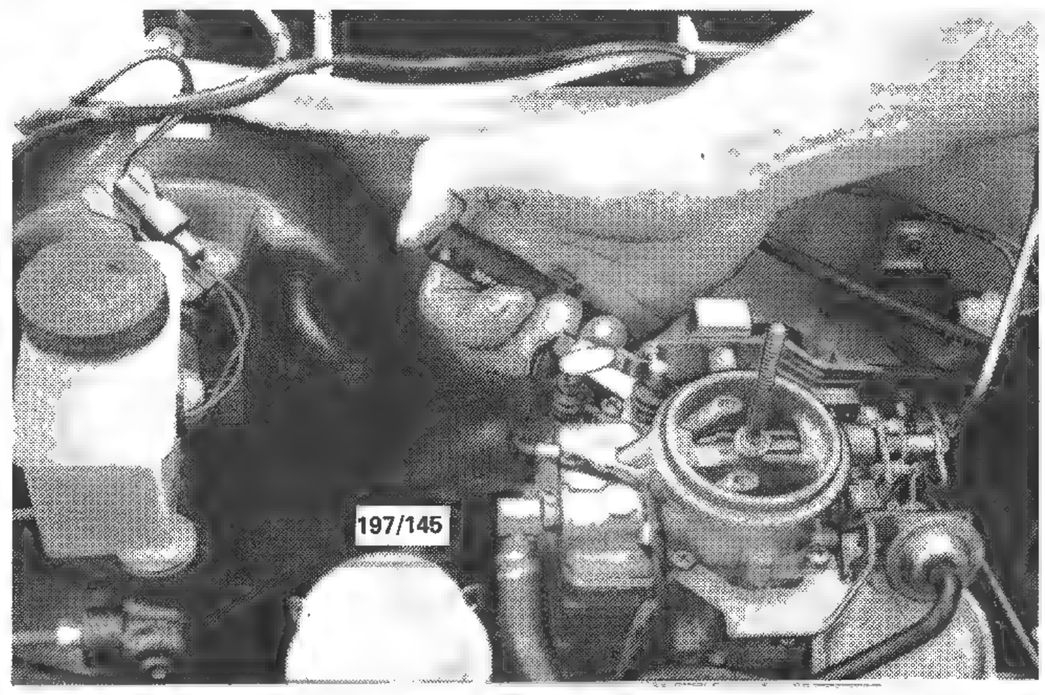

Disconnect the vacuum supply hose from the servo unit and using a thumb check for vacuum. The engine must be running for this test.

(2) Again apply the footbrake, but this time hold the brake pedal fully depressed.

(3) Start the engine. If the servo unit is functioning correctly, a distinct downward movement of the brake pedal should be noticed.

Should the pedal fail to fall away when the engine has been started, then the vacuum system can be considered inoperative.

NOTE: If the brake pedal continues to fall away then there is a fault in the hydraulic system.

(4) Ensure that the brake pedal is fully released, start the engine and run it at a medium speed. Stop the engine. Let the vehicle stand for 1–2 minutes, then press the brake pedal one or two times and check its operation.

If there is no vacuum assistance then the system has developed a leak or the one way check valve is defective.

NOTE: Prior to removing the servo unit from the vehicle for inspection, disconnect the vacuum supply hose at the unit then start the engine and check that manifold vacuum is in fact reaching the servo unit. Also check the operation of the one way check valve as described below.

TO TEST ONE WAY CHECK VALVE

(1) With the engine switched off, apply the footbrake several times to exhaust all vacuum from the system.

(2) Loosen the vacuum supply hose clips at the manifold and the servo unit and remove the hose from the vehicle.

(3) Check the valve installed inside the hose for sticking. Suction on the manifold side should allow air to flow through the valve. Air blown into the valve from the manifold side should not be able to flow through the valve.

NOTE: The manifold side of the hose is indicated by the words 'TO ENGINE' marked onto the hose.

(4) Renew the hose if it shows signs of collapsing or bulging due to deterioration.

(5) Instal the hose to the vehicle in a reverse manner to removal, check the operation of the servo unit as previously described and check the hose connections for vacuum leaks.

TO REMOVE AND INSTAL SERVO UNIT

(1) Remove the air cleaner assembly from the vehicle. Refer to the Fuel System section if necessary.

(2) Remove the master cylinder from the vehicle as previously described.

(3) Loosen the hose clip and disconnect the vacuum supply hose from the servo unit.

(4) Working inside the vehicle, remove the lower dash panel if fitted to gain access to the brake pedal.

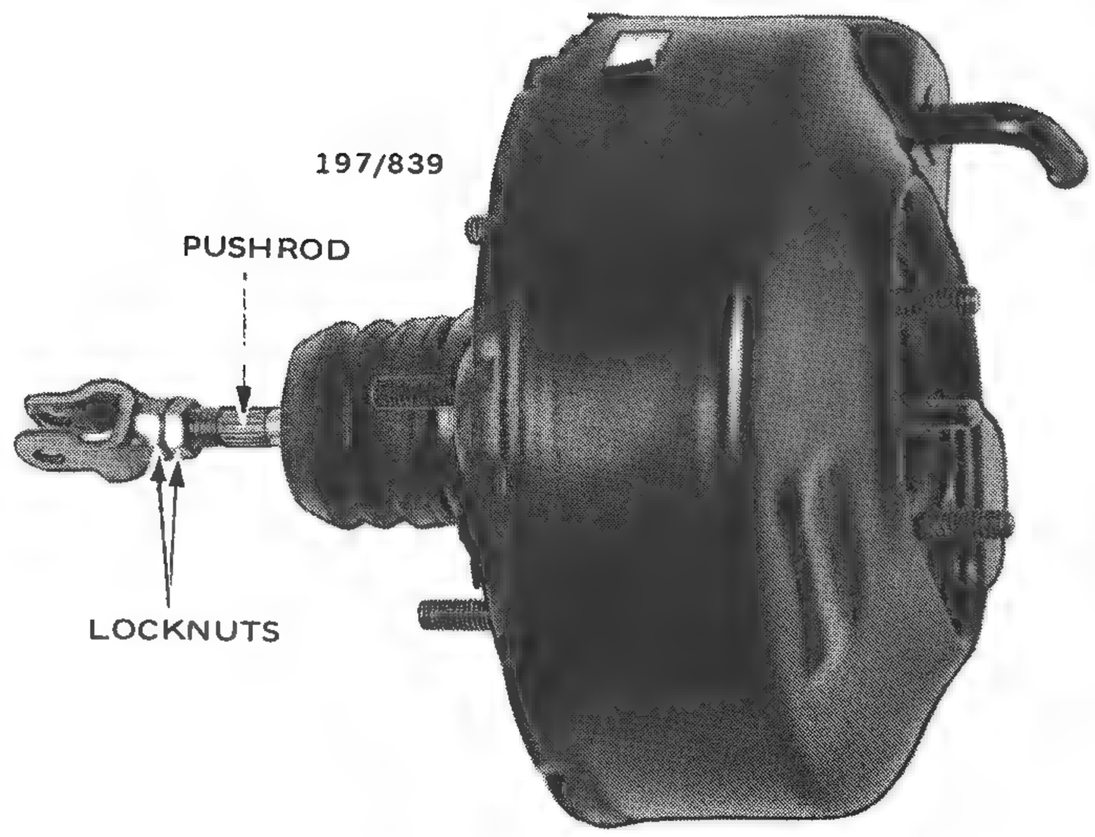

View of brake servo unit removed from the vehicle.

(5) Remove the split pin and withdraw the clevis pin connecting the brake pedal to the pushrod.

(6) Remove the four nuts retaining the servo unit to the bulkhead and remove the servo unit from the vehicle.

Installation is a reversal of the removal procedure with attention to the following points:

(1) Prior to installing the servo unit to the vehicle, check and if necessary adjust the servo unit to master cylinder pushrod as described under the Master Cylinder heading.

(2) With the servo unit and the master cylinder installed to the vehicle, bleed the hydraulic system as described under the Hydraulic System heading.

(3) Check and if necessary adjust the brake pedal to servo unit pushrod as described under the Brake Pedal heading.

5. FRONT BRAKE ASSEMBLY

Special Equipment Required:
To Check Brake Disc Runout – Suitable dial gauge
To Check Brake Disc Thickness – Micrometer

TO CHECK AND RENEW BRAKE PADS

(1) Raise the front of the vehicle and support on safety stands. Remove both the front road wheels.

(2) Visually inspect the brake pads on both sides of the vehicle. Renew the brake pads when the lining thickness is less than 1 mm or if contaminated with fluid or grease. If necessary renew the brake pads as follows:

NOTE: If the brake pads are contaminated trace and rectify the leak prior to installing new brake pads.

To ensure even braking renew brake pads in sets of four.

(3) Drain approximately two third of the brake fluid from the master cylinder reservoir. The fluid is

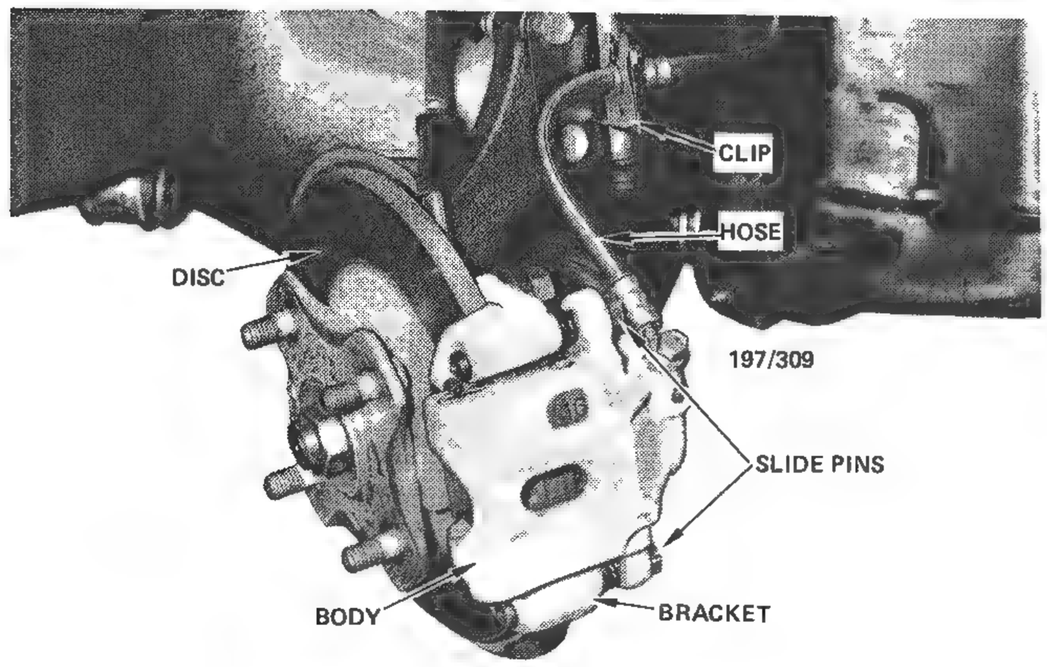

Installed view of brake caliper.

drained from the reservoir in order to prevent overflow when the caliper piston is pushed back into its bore to facilitate pad renewal.

NOTE: Do not drain all the fluid from the reservoir, otherwise it will be necessary to bleed the hydraulic system.

(4) Remove the clip retaining the brake hose to the suspension unit and disconnect the brake hose.

(5) Disconnect the brake pad return spring from the brake pads and remove the spring from the caliper.

(6) Remove the lower slide pin and raise the caliper body, pivoting the caliper on the upper slide pin. Using a suitable piece of wire, secure the caliper body away from the working area.

(7) Remove the brake pad assemblies from the caliper bracket. To aid removal of the outer brake pad, rotate the hub to align the cut away in the hub with the outer brake pad.

(8) Noting their installed positions, remove the shim and the spring clip from each brake pad.

(9) Squarely push the piston into its bore in the caliper body. Check the caliper body for fluid leaks.

(10) Using a micrometer, measure the thickness of the brake disc and compare with Specifications. If the brake disc is below the specified thickness, renew the brake disc as described later in this section.

(11) Using the dial gauge suitably mounted, measure the brake disc run out and compare with Specifications. If the brake disc run out is excessive, remove the brake disc as described later in this section and machine or renew the brake disc.

Installation is a reversal of the removal procedure with attention to the following points:

(1) Sparingly lubricate both sides of the shims and the contact surfaces between the brake pad locating lugs and the caliper with a suitable grease. Ensure that no grease comes into contact with the brake disc or the friction material on the brake pad.

(2) Position the shims and the spring clips onto the brake pads as noted during the removal procedure and instal the brake pads into the caliper bracket.

(3) Lower the caliper body into its installed position, ensuring that the shims or spring clips are not disturbed and instal and tighten the lower slide pin to the specified torque.

(4) Instal and connect the brake pad return spring to the brake pads.

(5) Connect the brake hose to the suspension unit and instal the clip to retain the hose in position.

(6) In the same manner instal new brake pads to the caliper on the other side of the vehicle.

(7) Gently pump the brake pedal to engage the caliper pistons with the brake pads.

(8) Top up the master cylinder reservoir with clean brake fluid, instal the road wheels and lower the vehicle to the ground.

TO OVERHAUL CALIPER

(1) Raise the front of the vehicle and support on safety stands. Remove the road wheel.

(2) Remove the bolt connecting the brake hose to the caliper body, disconnect the brake hose and plug the hose to prevent the loss of fluid and the ingress of dirt. Collect the sealing washers from either side of the brake hose.

(3) Remove the two slide pins retaining the caliper

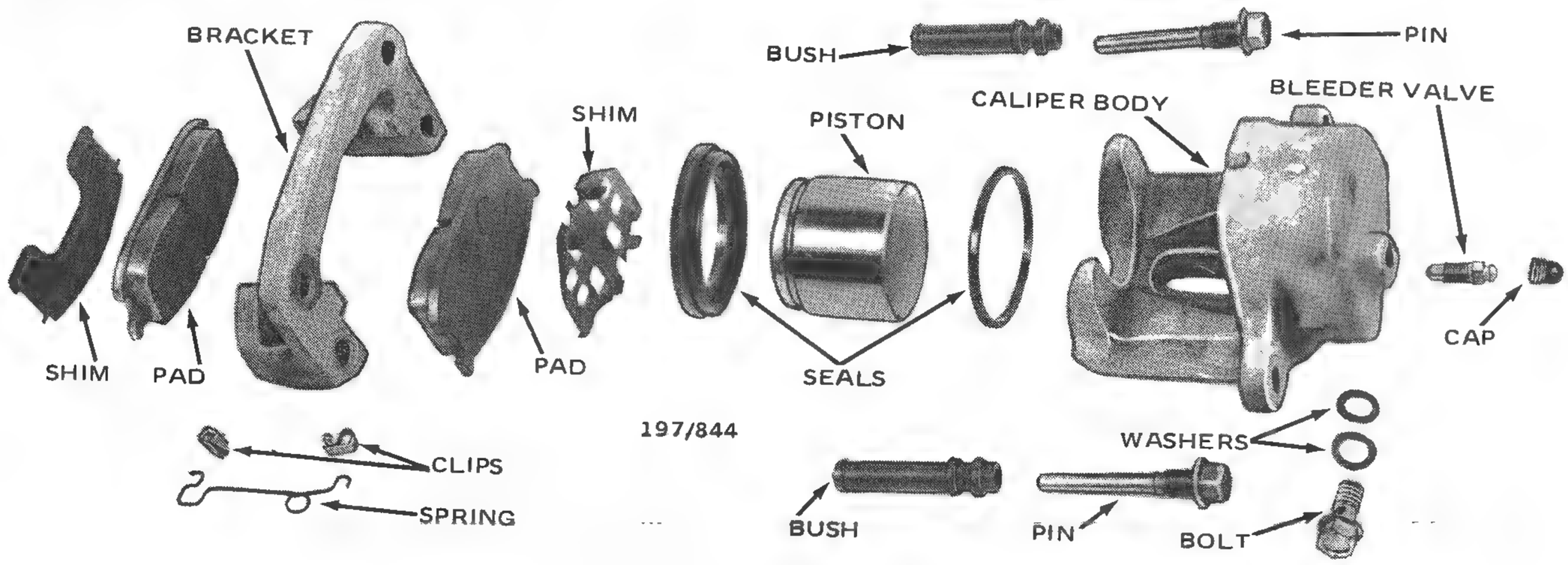

Dismantled view of brake caliper.

body to the caliper bracket and withdraw the caliper body from the vehicle.

(4) Place a piece of wood between the piston and the outer brake pad support and, using a low pressure of compressed air applied to the brake hose aperture, carefully force the piston from the caliper bore.

NOTE: Excessive air pressure may cause the piston to eject with great force and cause injury to the operator or damage to the piston.

(5) Using a thin blunt probe made of wood or plastic, carefully remove the dust seal and the piston seal from the caliper bore.

(6) Remove the bleeder valve from the caliper body.

(7) Using a suitable punch or one of the slide pins, push the slide pin bushes from the caliper bracket.

(8) Discard the slide pin bushes, the dust seal and the piston seal.

(9) Thoroughly clean all the components in methylated spirits, do not use petrol or kerosene and inspect carefully for wear and corrosion. Pay particular attention to the piston and the caliper bore. Renew all worn or corroded components as necessary.

Assembly and installation is a reversal of the removal and dismantling procedure with attention to the following points:

(1) Smear a new piston seal with rubber grease and instal it into the groove in the caliper bore. Ensure that the seal is not twisted and is correctly seated in the groove.

(2) Instal a new dust seal into the groove in the caliper bore, ensure that the seal is correctly seated in the groove.

(3) Lubricate the piston with clean brake fluid.

(4) Guiding the lip of the dust seal over the piston, gently push the piston by hand right into the caliper bore. Do not tilt the piston or use force to instal the piston.

(5) Instal the lip of the dust seal in the groove in the piston.

(6) Instal the bleeder valve into the caliper body but do not tighten at this stage.

(7) Instal new slide pin bushes into the caliper bracket, lubricated with a suitable rubber grease.

(8) Instal the caliper body onto the caliper bracket and instal and tighten the slide pins to the specified torque.

(9) Remove the plug from the brake hose, instal the two sealing washers either side of the brake hose and instal and tighten the brake hose retaining bolt securely.

(10) Top up the master cylinder with clean brake fluid and bleed the hydraulic system as described under the heading Hydraulic System – To Bleed.

(11) Instal the road wheel and lower the vehicle to the ground.

TO REMOVE AND INSTAL BRAKE DISC

To remove and instal the brake disc it is necessary to remove the steering knuckle and front hub assembly. Refer to the Steering Knuckle and Hub Assembly heading in the Front Suspension section.

It is necessary after the steering knuckle and hub assembly has been removed from the vehicle, to dismantle the hub assembly to gain access to the bolts retaining the brake disc to the front hub. As explained under the Steering Knuckle and Hub assembly heading, special equipment is required to dismantle and assemble the front hub assembly, therefore it is recommended that the steering knuckle and hub assembly be taken to a workshop with the necessary equipment for repair.

6. REAR BRAKE ASSEMBLY

Special Equipment Required:
To Adjust Hub Bearings – Spring scale

TO CHECK, REMOVE AND DISMANTLE

(1) Raise the rear of the vehicle and support on safety stands. Remove both the rear road wheels.

(2) Ensuring that the handbrake is fully released, remove the split pin retaining the handbrake cable to the handbrake actuating lever clevis pin and remove the clevis pin. Also remove the handbrake actuating lever stop from the brake backing plate.

(3) Using a suitable lever, remove the grease cap from the rear hub.

(4) Using a hammer and a suitable drift, bend back the tab on the hub retaining nut and remove the hub retaining nut, the washer and the outer bearing cone from the stub axle.

(5) Withdraw the brake drum and hub assembly from the stub axle.

(6) In same manner remove the brake drum assembly from the stub axle on the other side of the vehicle.

(7) Inspect the brake shoe linings. Renew the brake shoes when the lining thickness is less than 1 mm or if contaminated with fluid or grease. If necessary renew the brake shoes as follows:

NOTE: If the brake shoe linings are contaminated, trace and rectify the leak prior to installing new brake shoes.

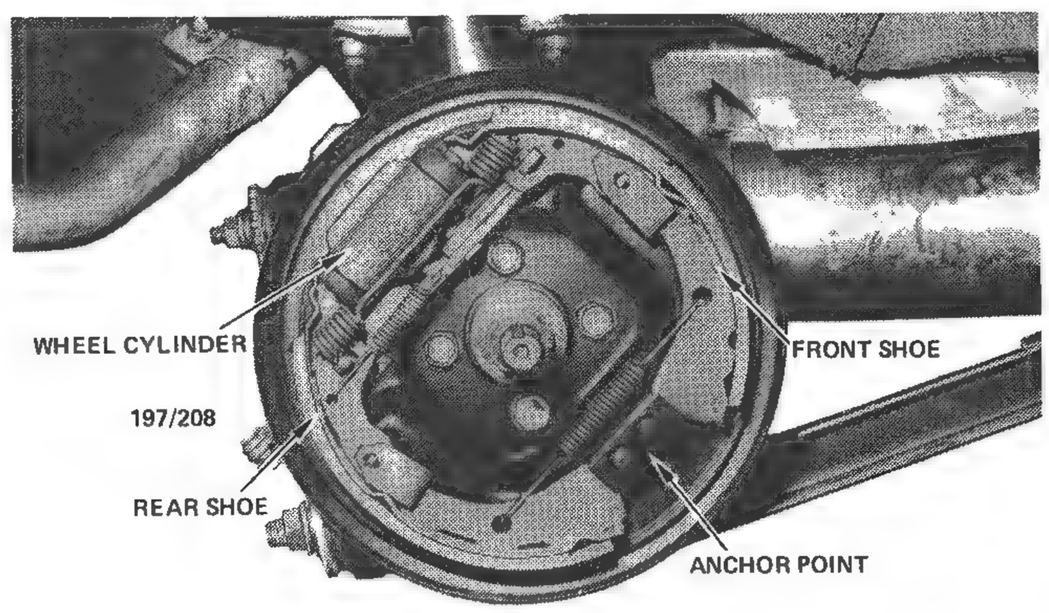

Assembled view of rear brake assembly.

To ensure even braking renew the brake shoes in sets of four.

(8) Mark each brake shoe and return spring with a daub of quick drying paint to ensure correct assembly.

(9) Using a pair of pliers compress the brake shoe hold down clip on the front brake shoe, turn the retaining pin through 90 deg and remove the hold down clip and the retaining pin from the brake shoe.

(10) Lever the front brake shoe from the anchor point, disconnect the return spring and remove the front brake shoe from the backing plate. Collect the two return springs.

(11) Using a pair of pliers compress the brake shoe hold down clip on the rear brake shoe, turn the retaining pin through 90 deg and remove the hold down clip and the retaining pin from the brake shoe.

(12) Disconnect the spring from the self adjuster assembly and remove the brake shoe from the backing plate. Withdraw the self adjuster assembly from the backing plate and collect the spring.

(13) Disconnect the brake pipe from the rear of the wheel cylinder and plug the pipe to prevent the loss of brake fluid or the ingress of dirt.

(14) Remove the two bolts retaining the wheel cylinder to the backing plate and withdraw the wheel cylinder.

(15) Remove the dust boots from the wheel cylinder and push the pistons and cups from the wheel cylinder bore.

(16) Unscrew and remove the bleeder valve and ball from the wheel cylinder.

TO CLEAN AND INSPECT

(1) Thoroughly clean all wheel cylinder components in methylated spirits and examine for wear.

NOTE: Once having dismantled a wheel cylinder, renew all rubber components.

(2) Inspect the pistons and the wheel cylinder bore for wear, corrosion and pitting. Clean up small marks with very fine wet or dry rubbing paper.

(3) Inspect the brake shoe linings for wear. Renew the brake shoes when the lining thickness is below the specified minimum thickness or if contaminated with fluid or grease.

(4) Inspect the brake drum for cracks, scoring and ovality and machine or renew as necessary.

(5) Check the tension of the return springs by comparison with new springs and renew as necessary.

(6) Inspect the self adjuster assembly for wear and damage, pay particular attention to the teeth on the ratchet and renew as necessary.

TO ASSEMBLE AND INSTAL

Assembly and installation is a reversal of the removal and dismantling procedure with attention to the following points:

(1) Lubricate the wheel cylinder bore with clean brake fluid. Dip the internal components in clean brake fluid prior to assembly.

(2) Instal a new wheel cylinder cup in the wheel cylinder bore with the lip towards the centre of the cylinder. Instal the piston behind the cup and instal the dust boot.

(3) Working at the other end of the wheel cylinder, instal the cup filler, the spring, the cup filler, the cup, the piston and the dust boot into the wheel cylinder bore in that order. Ensure that the lip of the cup faces towards the centre of the wheel cylinder. Clamp or tie the wheel cylinder assembly together.

(4) Instal the ball and bleeder valve to the wheel cylinder and tighten finger tight at this stage. Place a new sealing 'O' ring over the wheel cylinder.

(5) Mount the wheel cylinder assembly onto the backing plate, remove the plug and connect the brake pipe. Instal and tighten the two bolts retaining the wheel cylinder to the backing plate securely. Tighten the brake pipe securely.

(6) Sparingly lubricate the handbrake and self adjuster pivots and the brake shoe to backing plate contact points with a suitable grease.

(7) Insert the self adjuster assembly onto the backing plate with the adjuster in the fully retracted position.

(8) Instal the rear brake shoe into position, connect the spring to the self adjuster and instal the hold

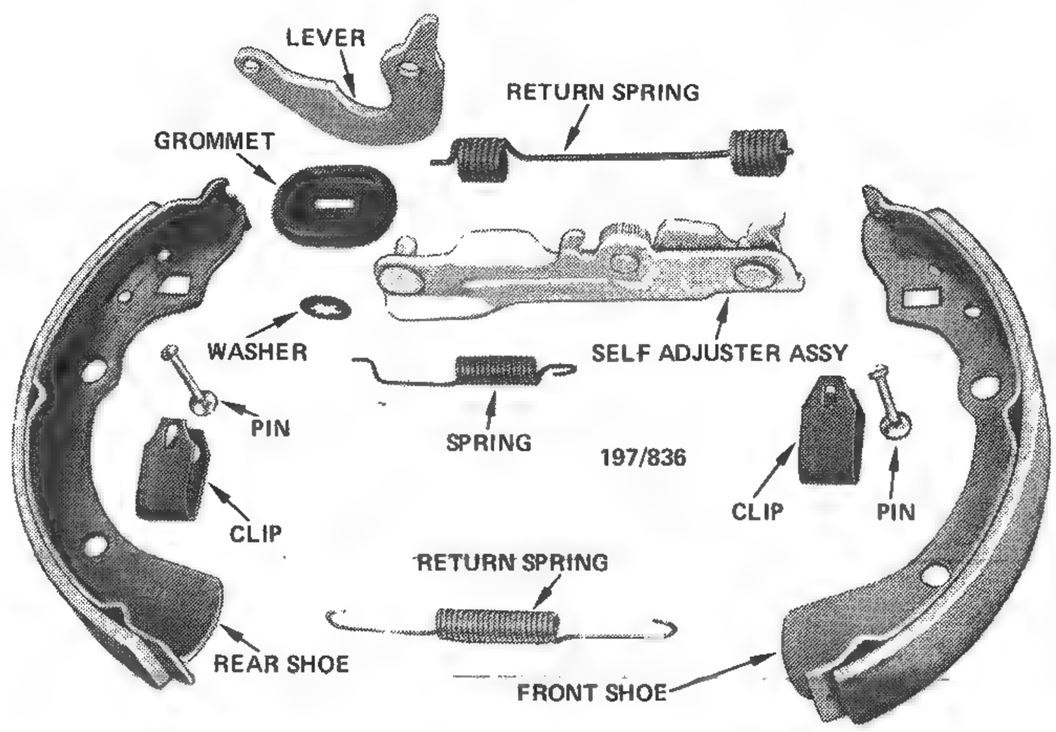

Dismantled view of rear brake assembly.

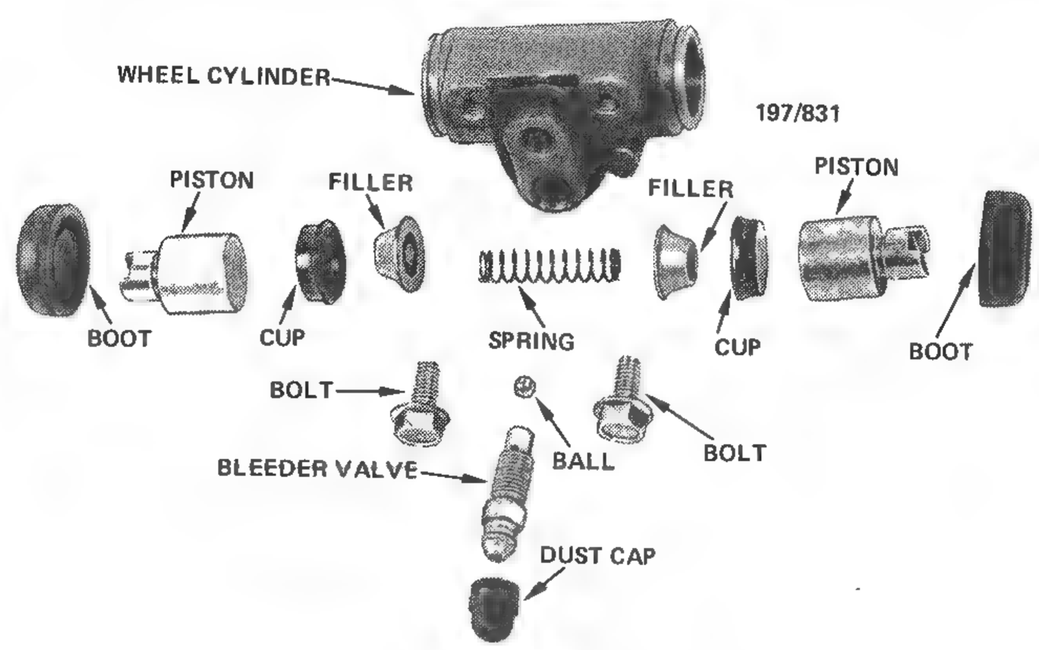

Dismantled view of the wheel cylinder.

down pin and clip to retain the brake shoe in position.

(9) Instal the front brake shoe onto the backing plate, connect the return springs and lever the brake shoe into position. Instal the hold down pin and clip to retain the brake shoe in position.

(10) Instal the handbrake actuating lever stop to the backing plate and connect the handbrake cable to the actuating lever using a new split pin to retain the clevis pin in position.

(11) Instal and adjust the brake drum and hub assembly onto the stub axle as described in the Rear Suspension section.

(12) Bleed the brakes as described under the Hydraulic System heading in this section.

(13) Instal the road wheel and lower the vehicle to the ground.

NOTE: To enable the self adjuster to adjust the brake shoes, firmly depress the foot brake pedal several times.

7. HANDBRAKE ASSEMBLY

TO REMOVE AND INSTAL HANDBRAKE LEVER

(1) Remove the screws retaining the handbrake lever console and remove the console from the vehicle.

(2) Remove the adjusting nut from the handbrake cable and disconnect the cable from the handbrake lever.

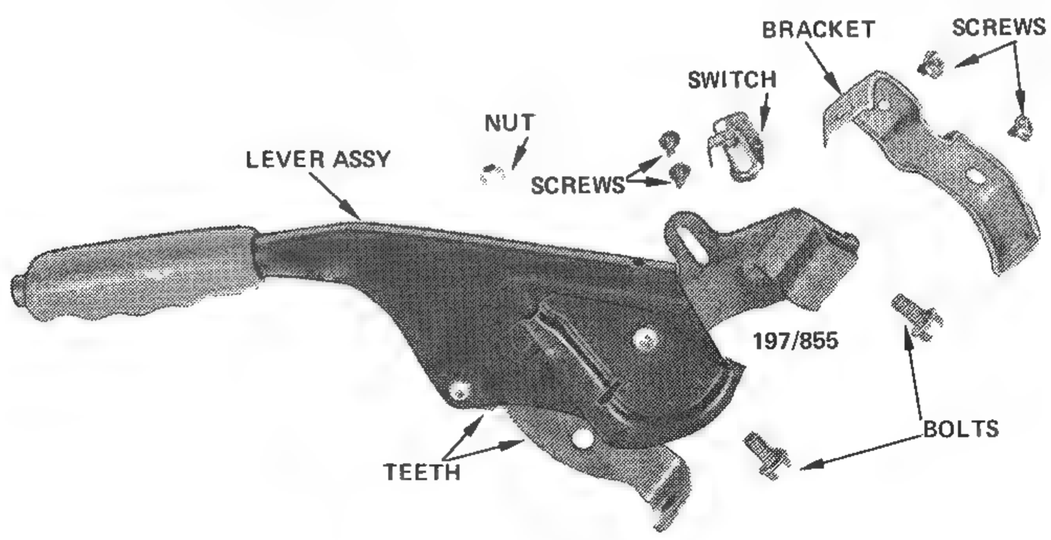

Dismantled view of handbrake lever assembly.

(3) Remove the two screws retaining the handbrake warning lamp switch to the handbrake lever and position the switch away from the working area.

(4) Remove the two bolts retaining the handbrake lever to the vehicle and remove the handbrake lever.

(5) Inspect the teeth on the ratchet for wear and damage and inspect the handbrake lever for fatigue, cracks and damage. Renew the handbrake lever as an assembly if necessary.

Installation is a reversal of the removal procedure with attention to the following point:

Adjust the handbrake as described later in this section.

TO REMOVE AND INSTAL HANDBRAKE CABLE

(1) Remove the screws retaining the handbrake lever console and remove the console from the vehicle.

(2) Remove the adjusting nut from the handbrake cable and disconnect the cable from the handbrake lever.

(3) Raise the rear of the vehicle and support on safety stands and remove the rear road wheels.

(4) Remove the split pins and withdraw the clevis pins connecting the handbrake cables to the handbrake actuating levers. Disconnect the handbrake cable return springs.

(5) Using a suitable screwdriver, remove the clips retaining the cable guides to the rear crossmember and withdraw the guides.

(6) Remove the two nuts retaining the cable equaliser to the body and lower the equaliser.

(7) Remove the bolts retaining the cable clamps to the body and withdraw the cable from the vehicle.

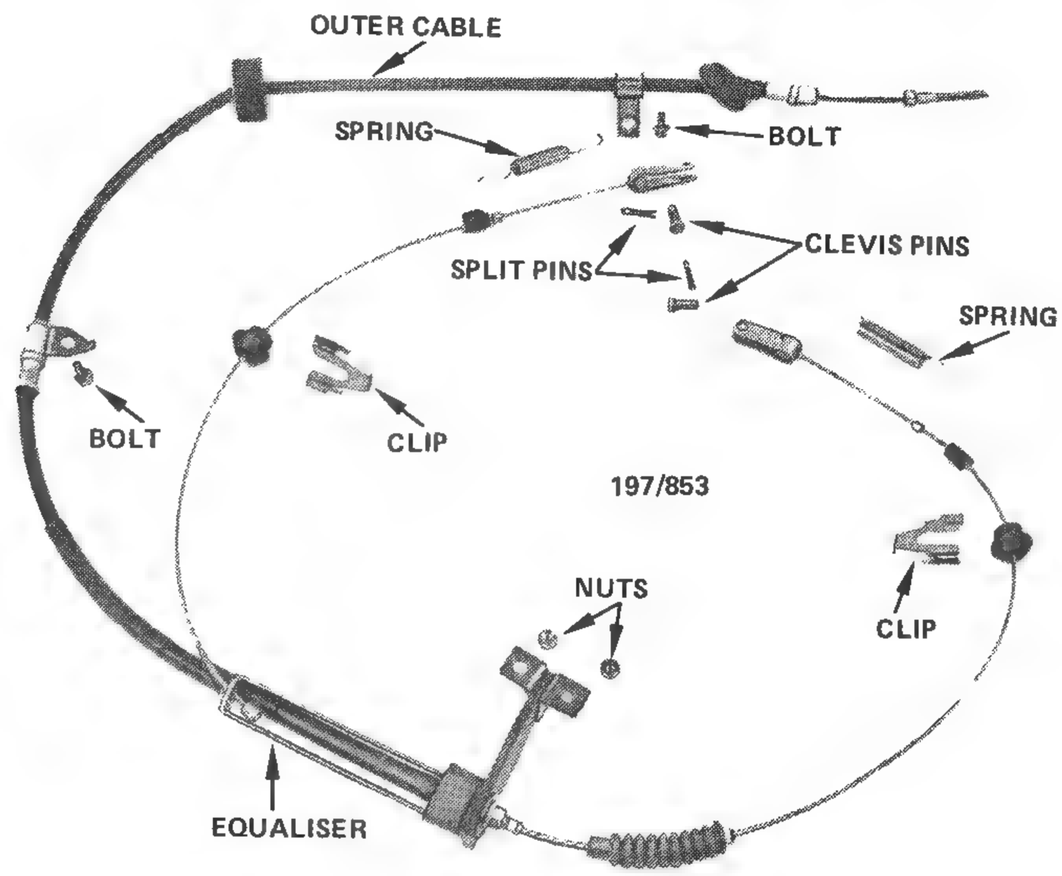

Dismantled view of handbrake cable and associated components.

NOTE: On some models it is possible to separate the right hand transverse cable from the equaliser.

(8) Inspect the inner cable for ease of movement through the outer cable and for fraying. Renew as necessary.

Installation is a reversal of the removal procedure with attention to the following point:

Adjust the handbrake cable as described later in this section.

TO ADJUST HANDBRAKE CABLE

(1) Raise the rear of the vehicle and suppport on safety stands.

(2) Remove the screws retaining the handbrake lever console and remove the console from the vehicle, on some models it may only be necessary to remove the small cover located in the console to gain access.

(3) Tighten or loosen the adjusting nut until the rear wheels are fully applied when the handbrake lever is applied 4 to 6 notches.

(4) After adjustment apply and release the handbrake several times and check that the rear wheels rotate freely when the handbrake is released.

NOTE: If after adjustment the rear wheels do not rotate freely, refer to Brakes Trouble Shooting for possible causes.

(5) With the ignition switch 'ON' check that the handbrake warning lamp is extinguished when the lever is fully released.

(6) Lower the vehicle to the ground and test the handbrake operation on an incline.

8. BRAKE PEDAL

TO REMOVE AND INSTAL

(1) Disconnect the negative battery terminal.

(2) Working inside the vehicle, remove the lower dash panel.

(3) Remove the split pin and withdraw the clevis pin connecting the brake pedal to the pushrod.

(4) Remove the nut and the washers from the brake pedal pivot bolt and withdraw the brake pedal pivot bolt. Remove the brake pedal from the vehicle.

(5) Remove the brake pedal return spring and the pivot bushes from the brake pedal.

(6) Inspect the brake pedal pivot bolt and bushes for wear and renew as necessary.

(7) Inspect the brake pedal return spring for breakage and fatigue and renew as necessary.

(8) Inspect the brake pedal for wear, cracks and fatigue, renew as necessary.

Installation is a reversal of the removal procedure with attention to the following points:

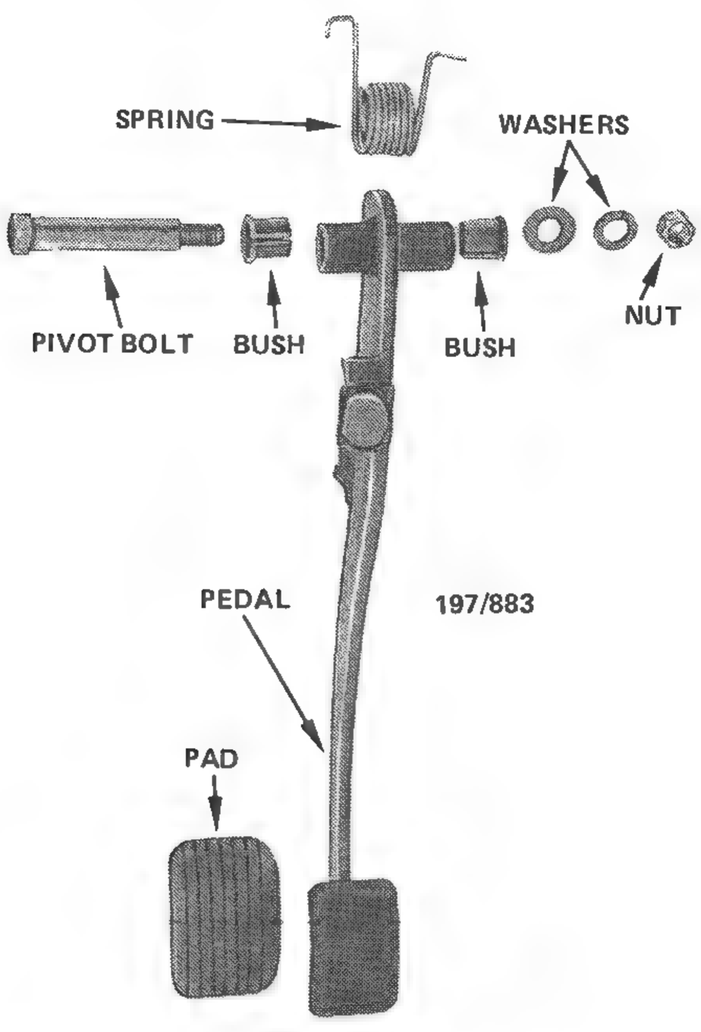

Dismantled view of brake pedal and associated components.

(1) Sparingly lubricate the pivot bolt, the pivot bushes and the clevis pin with a suitable grease.

(2) Ensure that the brake pedal return spring is correctly installed and that the pivot bolt and the clevis pin are inserted from the right hand side.

(3) Check and if necessary adjust the brake pedal height and the free play as described later in this section.

TO ADJUST PEDAL HEIGHT

The dimension for the brake pedal height is measured from the bulkhead to the centre of the pedal pad, refer to the relevant illustration. Refer to the Specifications for the correct dimension. If adjustment is necessary proceed as follows:

(1) Working inside the vehicle remove the lower dash panel.

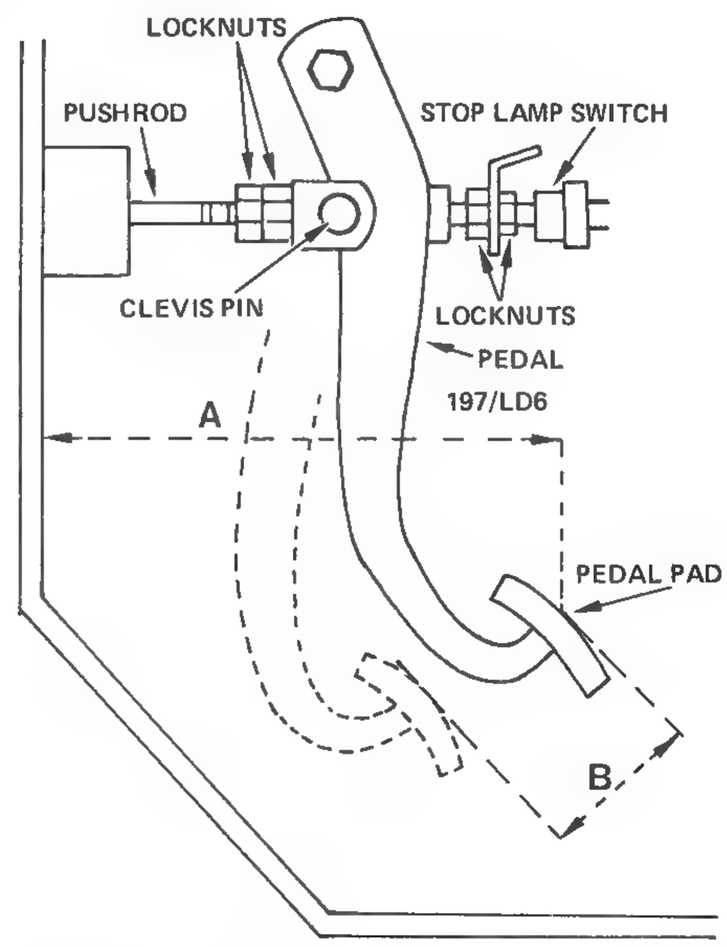

Illustration showing brake pedal free play and height measuring and adjusting points. Dimension A = Brake pedal height. Dimension B = Brake pedal free play.

(2) Disconnect the wiring connectors from the stop lamp switch.

(3) Loosen the locknuts on the stop lamp switch and position the stop lamp switch away from the brake pedal.

(4) Loosen the locknuts on the pushrod and adjust the pushrod to achieve the pedal height as listed in the Specifications. Tighten the locknuts.

(5) Screw the stop lamp switch in until it is against the brake pedal then screw it in an additional half a turn and tighten the stop lamp switch locknuts.

(6) Connect the stop lamp switch wiring connectors, instal the lower dash panel and check the brake pedal free play as described later in this section.

TO ADJUST PEDAL FREE PLAY

The dimension for the brake pedal free play is measured between the pedal in the released position and the

point where the piston in the servo unit starts to operate, refer to the relevant illustration. Refer to the Specifications for the correct dimension. If adjustment is necessary proceed as follows:

(1) Working inside the vehicle remove the lower dash panel.

(2) Ensure that the brake pedal height is correct as previously described.

(3) Loosen the locknuts on the pushrod and adjust the pushrod to achieve the pedal free play as listed in the Specifications.

(4) Tighten the locknuts and instal the lower dash panel.

9. PRESSURE PROPORTIONING VALVE

DESCRIPTION

On all models a brake pressure proportioning valve is incorporated in the brake system to prevent premature locking up of the rear brakes during severe braking.

The pressure proportioning valve is a separate unit from the master cylinder and is situated in the engine compartment on the bulkhead. Should the pressure proportioning valve prove to be defective it must be renewed as a unit.

TO TEST

On a road with a sealed surface and with good vision both forward and behind, apply the brakes 'hard' at a speed of 50 km/h. The four wheels should lock up together or the front wheels should lock up slightly before the rear wheels.

If one or both of the rear wheels lock up before the front wheels, the pressure proportioning valve can be considered faulty and should be renewed. Providing of course that the remaining components of the braking system have been inspected and proved to be serviceable.

NOTE: The above test procedure is only a crude method to test the operation of the pressure proportioning valve. Special equipment is required for accurate testing of the pressure proportioning valve, therefore if necessary, the vehicle should be taken to a Ford dealership for testing.

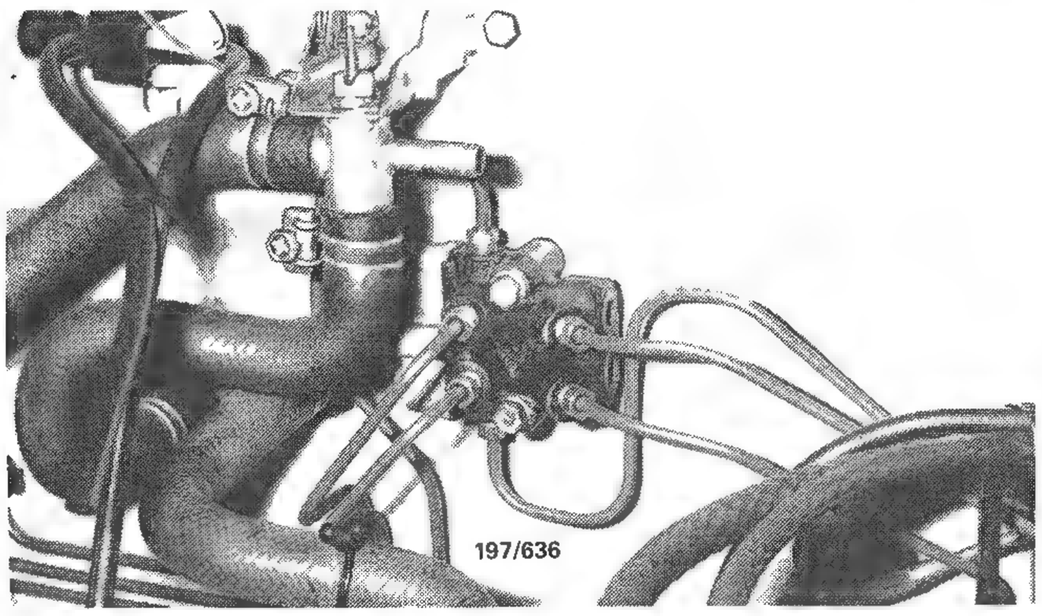

Installed view of the brake proportioning valve.

10. HYDRAULIC SYSTEM

TO BLEED

Bleeding the hydraulic system is not a routine maintenance operation and should only be necessary when some portion of the hydraulic system has been disconnected or fluid drained off, thereby allowing air to enter the system.

There are four points in the system where bleeder valves are fitted. One on each front brake caliper and one on each rear wheel cylinder.

(1) Raise the front and rear of the vehicle and support on safety stands. Ensure that the vehicle is level and remove all road wheels.

(2) Fill the fluid reservoir on the master cylinder with clean brake fluid and maintain it at least half full throughout the entire bleeding operation.

(3) Remove the rubber dust cap from the right hand front bleeder valve and attach a rubber bleeder tube to the bleeder valve. Allow the other end of the tube to be immersed in a small amount of brake fluid contained in a glass jar which should be raised at least 300 mm above the bleeder valve.

NOTE: Bleeding the brakes with the glass jar above the bleeder valve prevents air entering the hydraulic system via the threads of the bleeder valve.

(4) Pump the brake pedal several times and, with the brake pedal depressed, open the bleeder valve. Close the bleeder valve whilst air, or fluid and air, is escaping from the bleeder valve. Allow the brake pedal to return slowly and repeat this step until air bubbles cease to flow from the bleeder tube.

(5) Repeat operations (3) and (4) to the left hand rear, the left hand front and the right hand rear bleeder valves in that order. When bleeding the rear brakes the handbrake should be applied.

NOTE: Do not allow the fluid level in the reservoir to fall below the half full level at any

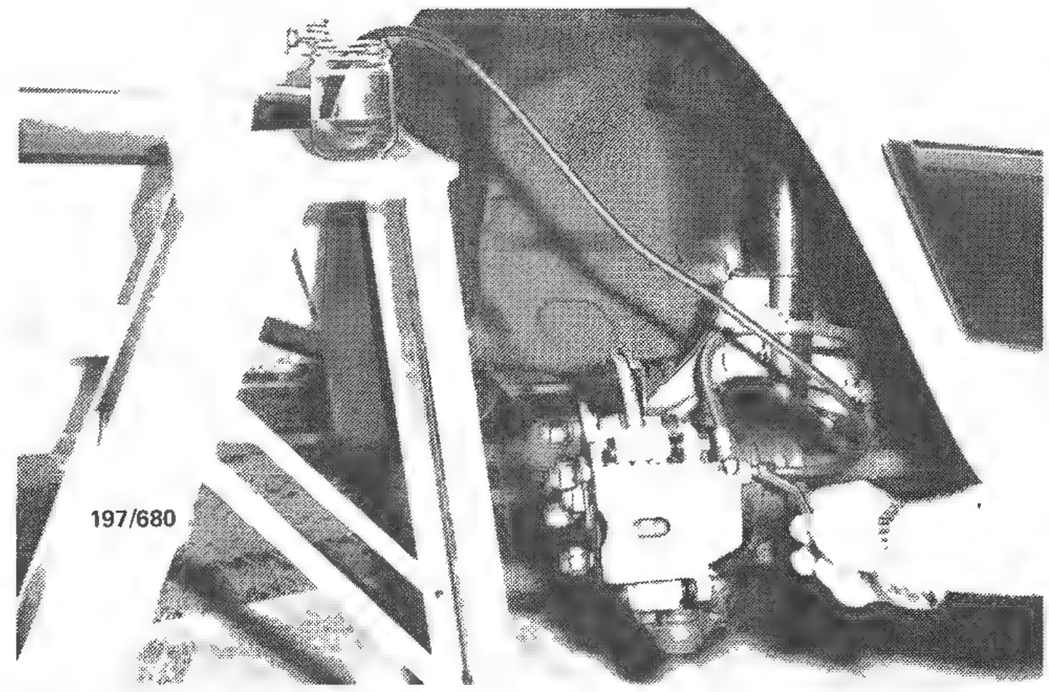

Bleeding the front caliper. It is recommended that the glass jar be positioned at least 300 mm above the bleeder valve to prevent air entering the hydraulic system via the threads of the bleeder valve.

time during the bleeding operations or air may enter the system and a fresh start will have to be made. Always use new brake fluid for topping up the reservoir.

(6) After bleeding the system the brake pedal should be firm when depressed with no evidence of sponginess. Ensure that all the bleeder valves are tight and that all the rubber dust caps are securely fastened to the bleeder valves.

(7) Top up the master cylinder reservoir with clean brake fluid, instal the road wheels and lower the vehicle to the ground.

SPECIFICATIONS

BATTERY

Type ..... 12 volt lead acid
Polarity to earth ..... Negative (–)

*Specific gravity:
Fully charged ..... above 1.260
Fully discharged ..... below 1.130
*Electrolyte specific gravity varies 0.007 for every 10 deg C rise or fall in temperature above or below 20 deg C. For above temperature add, for below temperature subtract.

ALTERNATOR

Make ..... Mitsubishi or Motorcraft
Regulator ..... Internal
Polarity to earth ..... Negative (–)
Brush length minimum ..... 8 mm
Rated output ..... 50 amps
Rotor winding resistance ..... 3–4 ohms

STARTER MOTOR

Make ..... Mitsubishi
Type ..... 12 volt solenoid operated
Drive type ..... Pre-engaged pinion with clutch
Number of brushes 3
Brush length minimum ..... 11.5 mm
Armature shaft end play ..... 0.2–0.5 mm
Drive pinion stop clearance ..... 0.5–2.0 mm

DISTRIBUTOR

Make ..... Mitsubishi
Rotation of rotor ..... Anti clockwise
Control ..... Vacuum and centrifugal advance
Capacitor capacity ..... 0.2 mfd

NOTE: For further Specifications regarding the ignition system refer to the Engine Tune-up section.

1. BATTERY AND CHARGING SYSTEM TROUBLE SHOOTING

BATTERY UNDERCHARGED

(1) Loose or broken drive belt: Adjust or renew drive belt.

(2) Faulty battery: Instal a new battery of the recommended type and capacity.

(3) Faulty alternator: Overhaul or renew alternator.

(4) Fault in charging system wiring: Check and renew or repair wiring harness.

(5) Faulty connections in charging system: Check and renew or repair component(s).

NOTE: The first thing to do is to test the state of charge of the battery with a hydrometer. As specific gravity varies with temperature it is advisable to use a hydrometer with an in-built thermometer so that the necessary variation can be calculated. Also an accurate hydrometer reading cannot be taken if distilled water has recently been added to the electrolyte. If the electrolyte level is below the battery plates it will be necessary to add water and charge the battery before testing with the hydrometer.

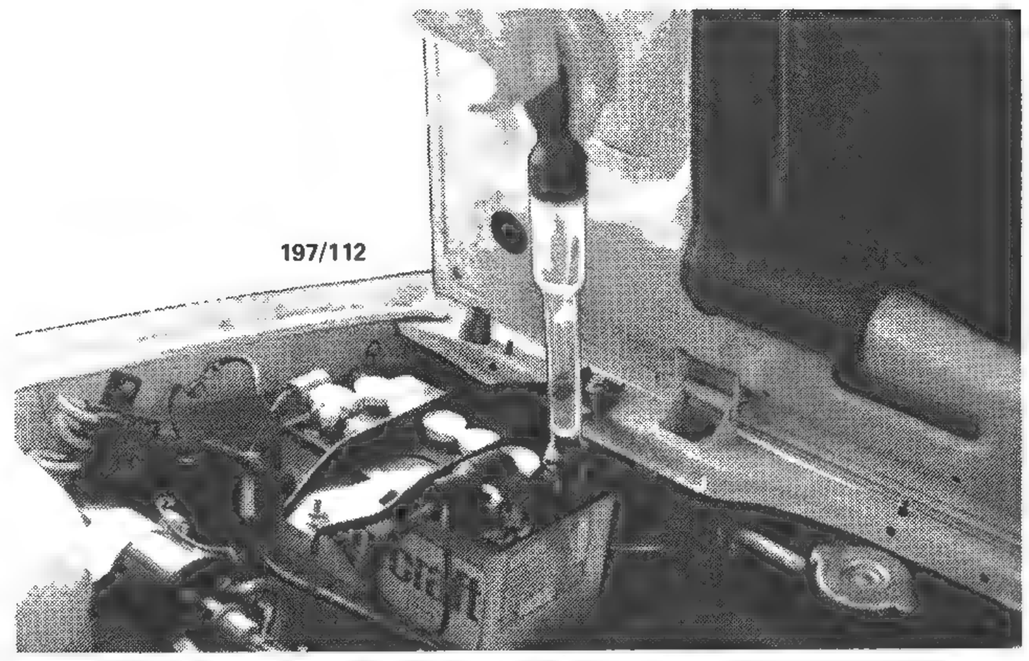

Check the specific gravity of the battery electrolyte in each cell with a hydrometer.

The specific gravity should not vary more than 0.030 between cells. If the variation is more than this then the serviceability of the battery is questionable and the battery should be recharged and retested before renewing it.

If all readings are above 1.225 and uniform the battery can be considered to be operational. However, it may require recharging depending on the reading. See attached chart showing charge condition for the various specific gravity readings.

1.110–1.130 ..... Dead flat
1.140–1.160 ..... Nearly flat
1.170–1.190 .... About one quarter charged
1.200–1.225 ..... Half charged
1.230–1.250 ..... About three quarters charged
1.260–1.280 ..... Fully charged

If the battery is undercharged but serviceable seek out the cause by checking out the possible causes in the order given.

BATTERY OVERCHARGED

(1) Faulty alternator: Overhaul alternator and replace internal alternator regulator.

(2) Faulty battery: Instal a new battery of the recommended type and capacity.

(3) Faulty charging circuit wiring or connections: Check and renew or repair faulty components.

NOTE: An overcharged battery is indicated by continual loss of water through boiling. This is usually accompanied by discoloration of the electrolyte.

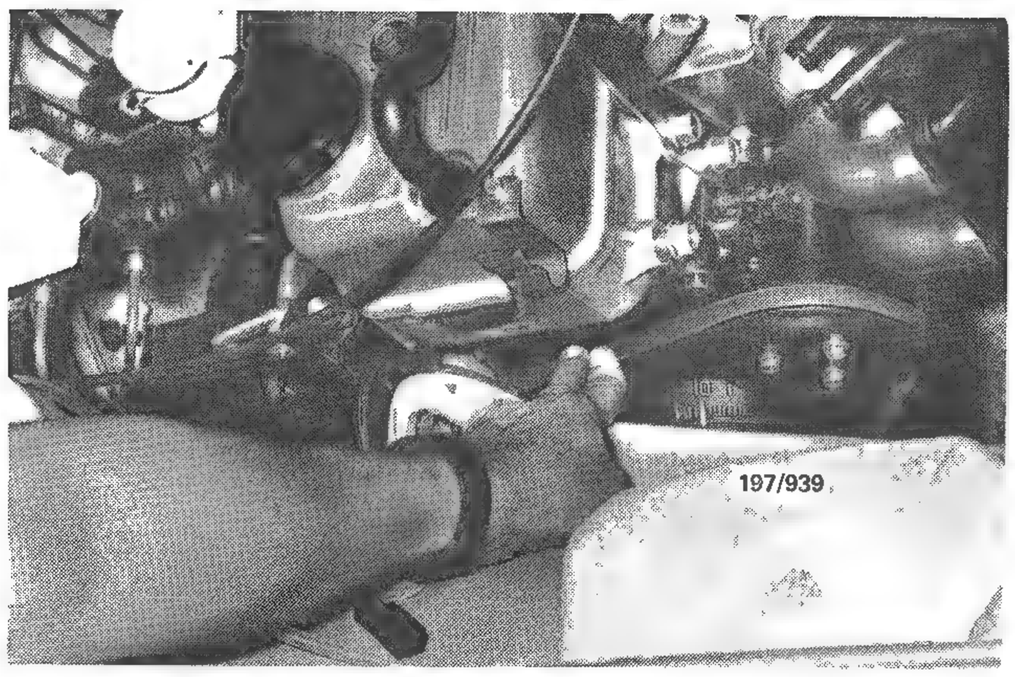

Check for loose or broken drive belt.

CHARGE INDICATOR LAMP REMAINS ON

(1) Broken or defective alternator drive belt: Renew drive belt.

(2) Faulty alternator: Check and overhaul alternator.

(3) Short to earth in lamp circuit: Check and repair circuit.

(4) Faulty check relay: Renew relay.

CHARGE INDICATOR LAMP DOES NOT OPERATE

(1) Charge indicator lamp bulb blown: Check and renew faulty bulb.

(2) Faulty ignition switch: Check and renew faulty switch.

(3) Blown fusible link: Repair cause and renew fusible link.

(4) Faulty check relay: Renew relay.

NOISE IN DRIVE BELT OR ALTERNATOR

(1) Drive belt frayed: Renew drive belt.

(2) Loose alternator mounting bolts or worn bearings: Tighten mounting bolts or renew bearings.

(3) Loose alternator pulley: Tighten pulley retaining nut.

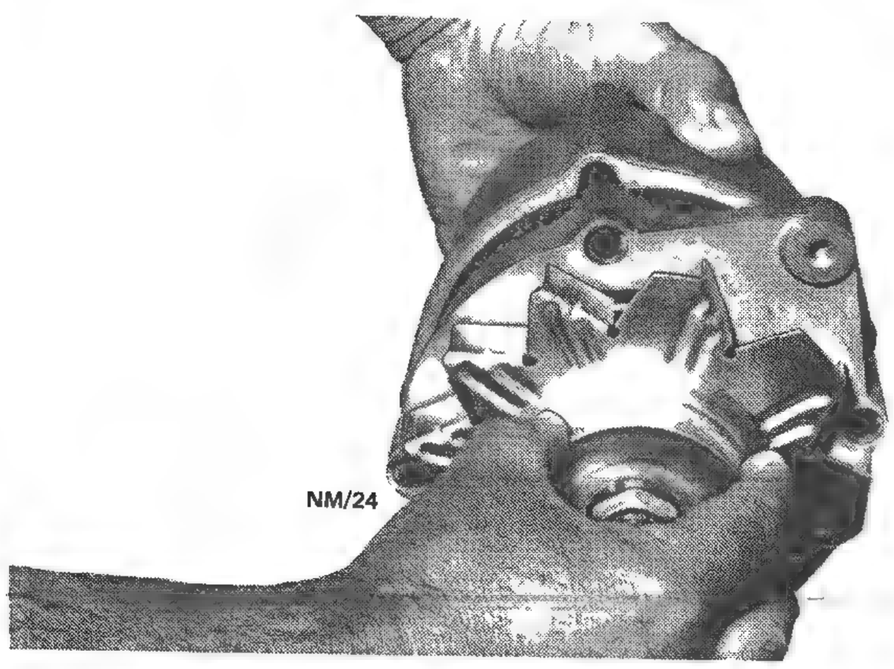

Spin the alternator pulley over by hand to check bearings for noise.

(4) Faulty alternator: Overhaul or renew alternator.

NOTE: To check if the noise is in the alternator or drive belt loosen off the alternator and remove the drive belt. If the noise is gone when the engine is run for a short time, check the serviceability of the belt and alternator components.

2. BATTERY AND STARTING SYSTEM TROUBLE SHOOTING

STARTER LACKS POWER TO CRANK ENGINE

(1) Battery undercharged: Check the charging system and rectify as necessary.

(2) Battery faulty, will not hold charge: Check and renew battery.

(3) Battery terminals loose or corroded: Clean and tighten terminals.

(4) Faulty starter motor: Check and overhaul starter motor.

(5) Faulty starter solenoid switch or contacts: Check and renew solenoid as necessary.

NOTE: Check the state of charge of the battery and check all terminals for cleanliness and security. If necessary test and overhaul the starter motor as described in this section.

STARTER WILL NOT ATTEMPT TO CRANK ENGINE

(1) Open circuit in starting system: Check for dirty or loose terminals, dirty commutator, faulty solenoid or faulty switch.

(2) Discharged battery: Check for fault or short circuit in system.

(3) Battery fully charged but will not crank engine: Check for locked drive and ring gear, internal starter fault or seized engine.

(4) Faulty neutral safety switch: Check and renew faulty neutral safety switch. (Automatic transmission only. Refer to that section for details.)

NOTE: Turn engine over by hand to ensure that the starter drive is not locked with the flywheel ring gear and that the engine is not seized. Ensure that the ignition is switched off before turning the engine.

3. LIGHTING SYSTEM TROUBLE SHOOTING

LAMP OR LAMPS FAIL TO LIGHT

(1) Faulty bulb(s): Check and renew faulty bulb(s).

(2) Open circuit in wiring or connections: Check out lamp circuits and rectify as necessary.

(3) Faulty lamp switch: Check and if necessary renew lamp switch.

(4) Faulty fuse: Repair cause and renew fuse.

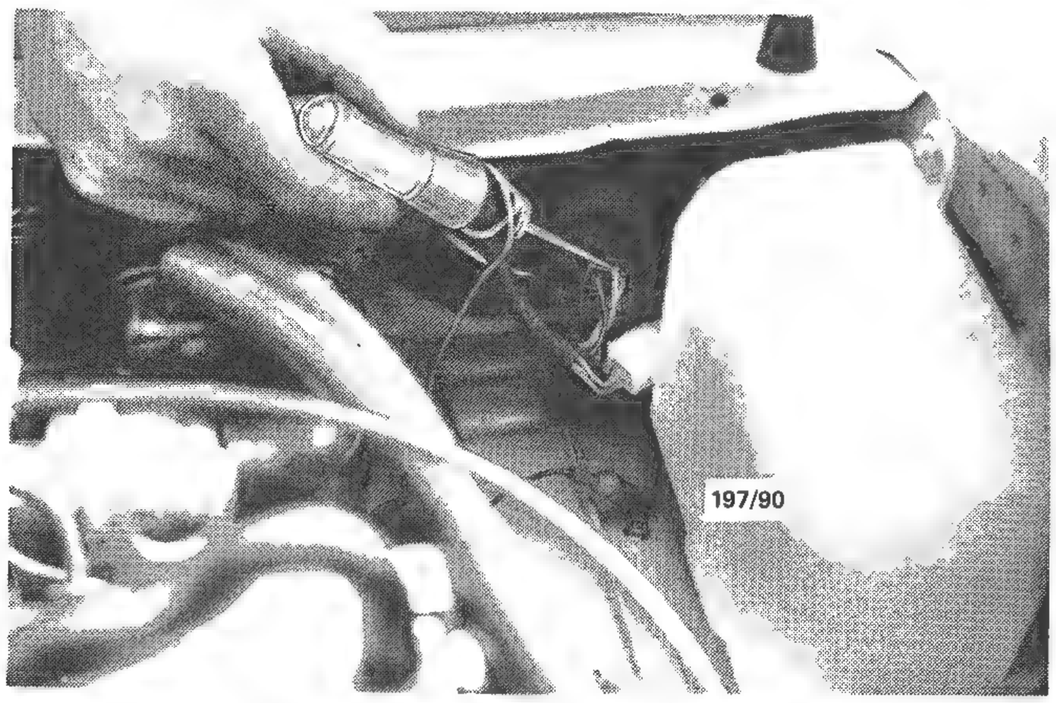

Using a test lamp to check headlamp circuit.

NOTE: Switch on the lamps concerned and using a test lamp, check that the lamp circuits are operating. This is best done by starting at the lamp wiring connector or bulb holder and working back to the power source.

LAMP OR LAMPS INCORRECTLY ILLUMINATED

(1) Lamp or lamps incorrectly earthed: Check lamp earth for looseness or clean contact, either at lamp body or wire and repair as necessary.

(2) Incorrect bulbs fitted: Check out bulbs wattage and voltage and renew with the correct type if necessary.

(3) Dirty or damaged lamp reflector: Clean or renew lamp reflector.

(4) Faulty bulbs: Check out with a known serviceable unit and renew if necessary.

(5) Dirty lamp lens: Clean or renew lamp lens.

NOTE: The most common cause for this condition is incorrect lamp earthing. Check the lamps at their earthing points.

LAMPS FLARE WITH ENGINE SPEED INCREASE

(1) Faulty battery: Check and renew battery.

(2) Battery in low state of charge: Recharge battery and check charging system.

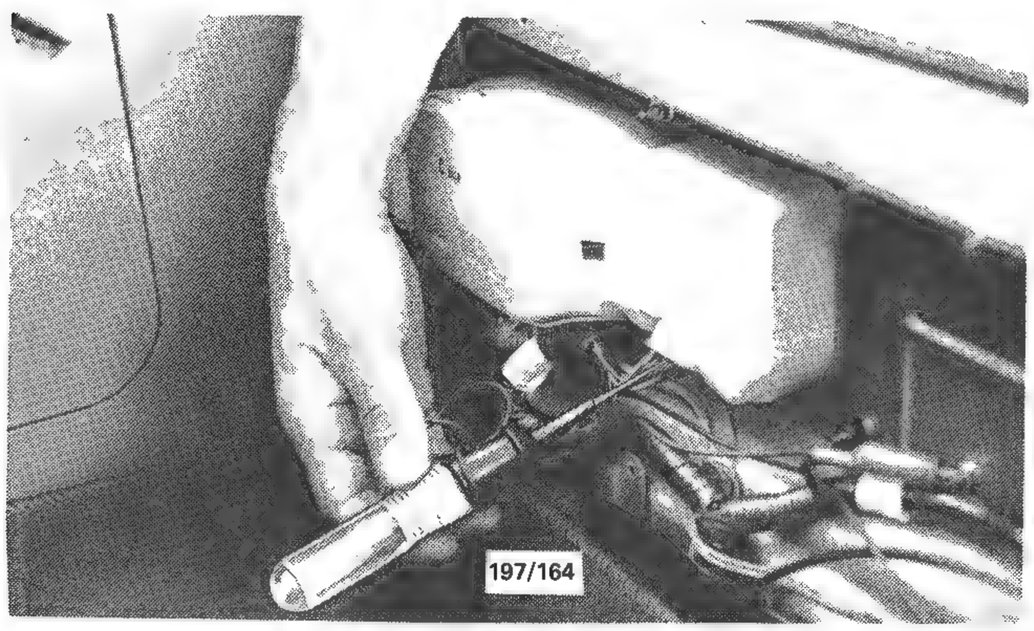

Using a test lamp to check the rear lamp circuit.

(3) High resistance or faulty connections between alternator and battery: Check circuit and rectify condition.

(4) Poor earth connection between battery and engine or alternator: Check battery earth lead and the strap between engine and body.

(5) Voltage regulator unit faulty: Check and renew voltage regulator.

NOTE: The most common cause for this condition is dirty terminals on the earth leads. Check all earth leads at their earthing points.

4. TURN SIGNAL LAMP TROUBLE SHOOTING

TURN SIGNAL WARNING LAMP DOES NOT BURN AND NO AUDIBLE CLICKING FROM FLASHER UNIT WHEN TURN IS SELECTED ON SWITCH LEVER

(1) Fuse blown: Rectify fault and renew fuse.

(2) Faulty flasher unit: Renew flasher unit. Do not attempt to repair.

(3) Faulty turn signal switch: Renew switch.

(4) Fault in wiring circuit: Check and repair fault.

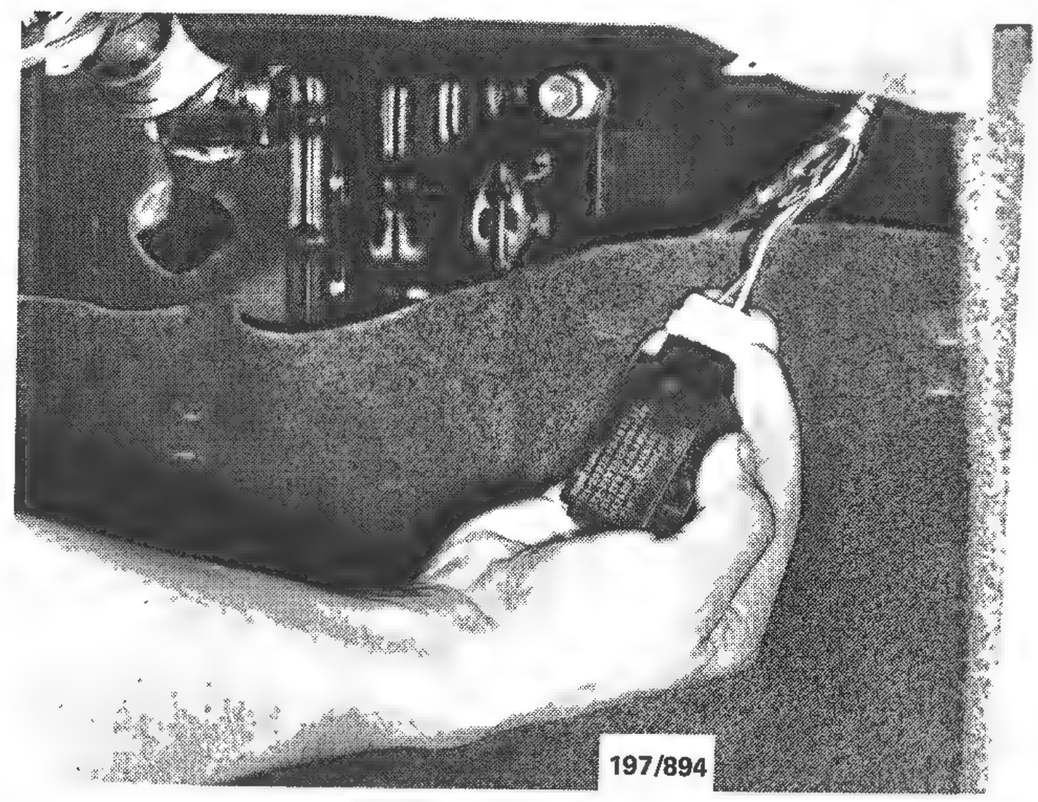

If the bulbs and fuse are functional, check the flasher unit by replacing with a known serviceable unit.

NOTE: If the fuse is functional check the flasher unit for serviceability by replacing with a known serviceable unit.

TURN SIGNAL WARNING LAMP DOES NOT FLASH BUT AUDIBLE CLICKING FROM FLASHER UNIT WHEN TURN IS SELECTED ON SWITCH LEVER

(1) Warning lamp bulb blown: Check and renew bulb.

(2) Fault in warning lamp wiring: Check and repair fault.

NOTE: When renewing bulbs ensure that a new bulb of the correct wattage is used.

BOTH WARNING LAMPS FLASH WEAKLY AND AT GREATER THAN NORMAL SPEED WHEN TURN IS SELECTED ON SWITCH LEVER

(1) Faulty flasher unit: Check and renew flasher unit.

(2) Front bulb blown on turn side: Check and renew bulb.

(3) Rear bulb blown on turn side: Check and renew bulb.

NOTE: If one lamp unit is constantly blowing bulbs check for high resistance in circuit.

BOTH TURN SIGNAL WARNING LAMPS BURN CONSTANTLY WHEN TURN IS SELECTED ON SWITCH LEVER

(1) Faulty turn signal switch: Check and renew turn signal switch.

(2) Fault in turn signal switch wiring: Check and repair fault.

(3) Faulty flasher unit: Check and renew flasher unit.

NOTE: If the flasher unit is to be renewed always try to obtain a genuine replacement part.

5. IGNITION SYSTEM TROUBLE SHOOTING

ENGINE WILL NOT START

(1) Fault in ignition primary circuit wiring: Check ignition primary circuit and repair as necessary.

(2) Faulty ignition switch: Renew ignition switch.

(3) Fault in coil primary winding: Renew ignition coil.

(4) Burnt or dirty contact breaker points: Clean or renew and adjust contact breaker points.

(5) Faulty capacitor or capacitor lead: Check and renew capacitor.

(6) Fused or broken low tension wire from breaker arm to low tension terminal: Renew low tension wire and capacitor.

(7) Fault in coil high tension circuit: Test and renew ignition coil as necessary.

(8) Cracks in distributor cap: Renew distributor cap.

(9) Crack in distributor rotor arm: Renew rotor arm.

(10) Faulty high tension leads: Check and renew high tension leads.

(11) Faulty or incorrectly adjusted spark plugs: Renew or clean and adjust spark plugs.

NOTE: Refer to the Roadside Trouble Shooting section and make the necessary tests to ensure that the trouble is in the ignition system. To determine if low tension current is reaching the coil remove the lead from the ignition side of the coil and check with a test lamp. It will be necessary to turn the ignition switch to the 'ON' position for this test. If current is reaching the ignition side of the coil disconnect the low tension wire at the distributor. If low tension current is reaching the distributor check out the distributor and high tension circuit as outlined in the Roadside Trouble Shooting section. If the distributor is serviceable and still no spark is evident renew the ignition coil.

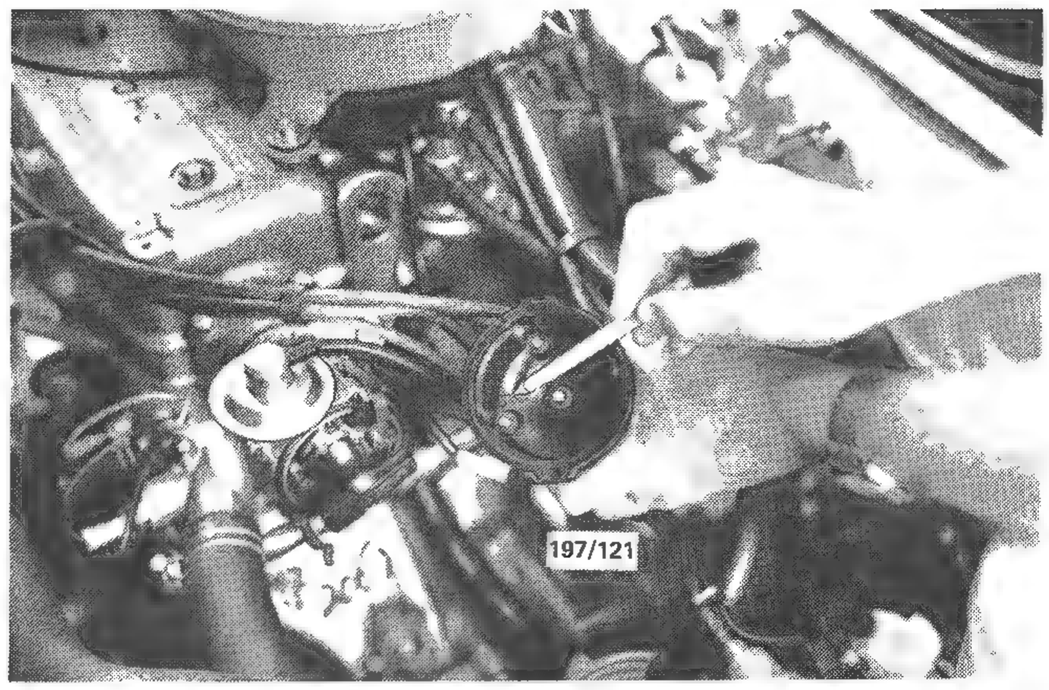

Check the distributor cap for tracking between terminals.

ENGINE STARTS BUT MISFIRES UNDER LOAD

(1) Faulty, dirty or incorrectly adjusted spark plugs: Renew or clean and adjust spark plugs.

(2) Dirty, or incorrectly adjusted contact breaker points: Clean, adjust or renew contact breaker points.

(3) Uneven wear on distributor cam: Check and overhaul distributor.

(4) Condensation moisture in distributor cap: Check, dry out and examine cap for cracks.

(5) Cracked spark plug insulator(s): Renew faulty spark plug(s).

(6) Faulty ignition coil: Check and renew ignition coil.

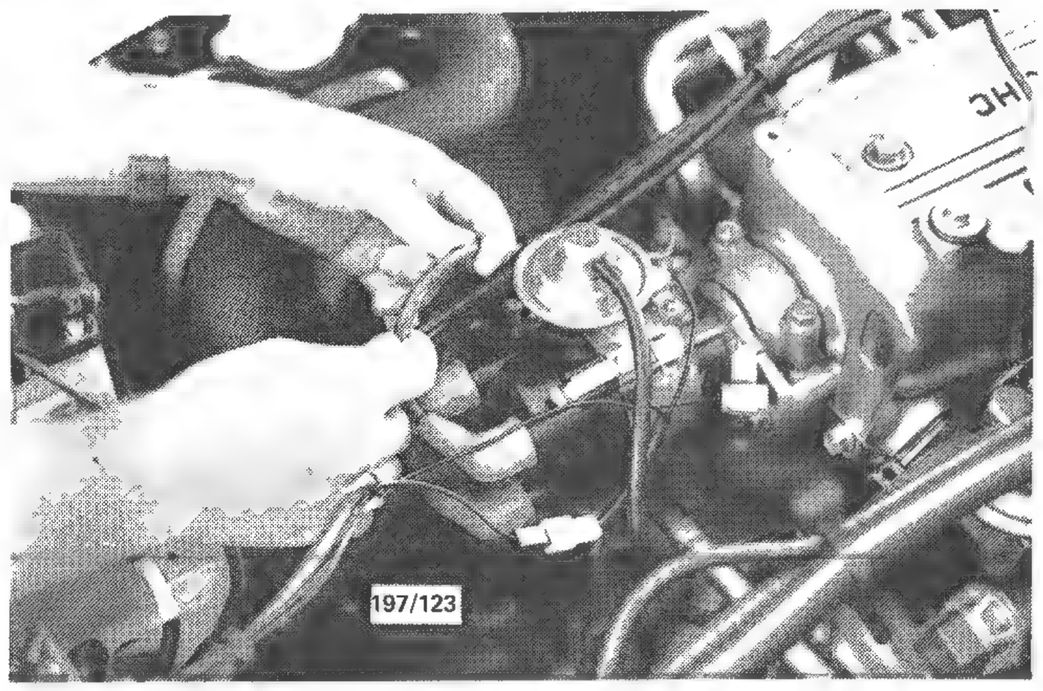

Check the high tension leads for perishing or cracking. Also check the lead ends for burning.

(7) Defective high tension leads: Renew high tension leads.

(8) Faulty capacitor: Check and renew capacitor.

NOTE: Check out possible causes in the order given.

ENGINE RUNS BUT LACKS POWER

(1) Ignition timing incorrectly set or contact breaker points require adjusting: Check and readjust timing and/or contact breaker points.

(2) Centrifugal advance mechanism seized or excessively worn: Overhaul distributor.

(3) Vacuum advance unit inoperative: Check for broken vacuum pipe or faulty unit.

(4) Vacuum advance unit operates but ineffective: Advance unit link disconnected or broken.

NOTE: To check if the centrifugal advance mechanism is operating correctly remove the distributor cap and twist the rotor arm in the direction of normal rotation. When released it should spring back to its original static position.

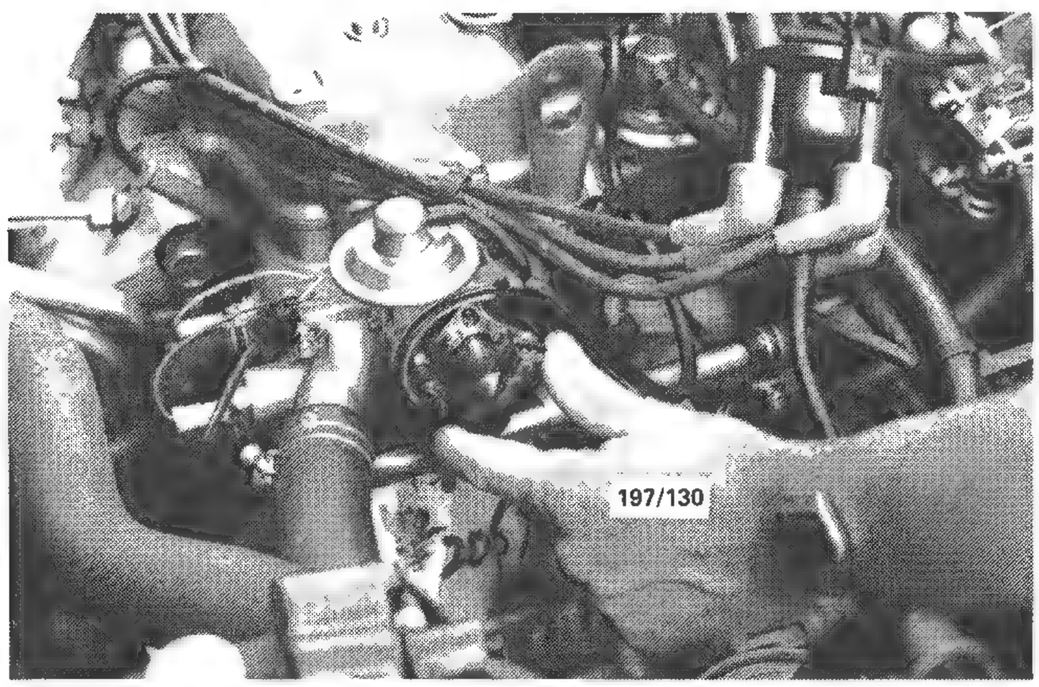

Twist the rotor in the direction of normal rotation. It should spring back to its original position.

6. TEST EQUIPMENT AND SOME APPLICATIONS

TO MAKE A TEST LAMP

When working on the electrical system, a test lamp will be found to be most helpful for checking the continuity of live circuits. A simple test lamp can be made from two suitable lengths of 4 millimetre wire, two small alligator type clips, a double contact bulb holder and a 12 volt single filament double contact bulb.

(1) Bare both ends of the two lengths of 4 millimetre wire.

(2) Solder an alligator clip to one end of each wire lead.

(3) Connect the other end of each lead to the double contact bulb holder terminals and ensure that they are insulated from each other and from the bulb holder base.

(4) Instal the bulb in the bulb holder.

(5) To test the unit connect it across a 12 volt battery, the bulb should light up if the wiring is correct and the bulb serviceable.

TO MAKE A JUMPER LEAD

When testing components of the electrical system a jumper lead is very handy.

(1) Bare both ends of a suitable length of 4 millimetre wire.

(2) Connect a small alligator clip to each end of the wire. Solder and tape the connections.

(3) Test the jumper lead for continuity by removing one battery cable and connecting the lead between the cable and the battery terminal. Turn the ignition key to 'ON' and the dash warning lamps should operate indicating a completed circuit through the jumper lead.

(4) Remove the jumper lead from the circuit and reconnect the battery.

NOTE: Make a few test leads of various lengths using different sizes and types of alligator and battery clips.

TO TEST SWITCHES

If a switch is suspected of being faulty, remove the wires from the switch and using a test lamp, test each lead to find the power wire. It may be necessary to turn the ignition switch 'ON' as the switch may be wired through the ignition circuit.

After noting the color/position of the wire, disconnect the test lamp and using a suitable jumper lead, connect the jumper lead from the power wire of the switch to the other side of the switch. If the circuit functions, the switch is faulty and should be renewed. See Switches and Controls.

TO TEST BULBS

If a bulb is suspected of being faulty, remove the bulb from the bulb holder and using a small jumper lead connect one end of the jumper lead to the power terminal of a serviceable battery and the other end of the jumper lead to a lug on the side of the bulb.

Connect one end of a second jumper lead to the earth terminal of the battery and with the other end of the jumper lead touch the bulb contact. The bulb should light.

If the bulb has two filaments, touch the other bulb contact with the end of the jumper lead. The bulb should light. If the bulb should fail to light, the bulb should be replaced with a bulb of the correct voltage and wattage.

TO TEST CIRCUITS

If a circuit is suspected of being faulty, turn the switch on in the normal manner so as to supply power to the circuit.

Where connections are in the circuit, disconnect the connection and connect one lead of the test lamp to the power or switch side of the disconnected circuit

and the other lead of the test lamp to a clean earth (e.g. bolt or screw). If the lamp does not light, check the circuit towards the power or switch end of the circuit.

If the lamp lights, continue checking towards the motor or bulb in the circuit.

NOTE: A fuse or its associated connections is always a good starting point, but reconnect each connector or fuse after testing that particular connector or fuse.

7. BATTERY

Special Equipment Required:
To Test – Hydrometer

MAINTENANCE

Maintenance consists mainly of regular inspection and servicing.

(1) Keep the battery and its surroundings clean and dry. Give the top of the battery particular attention to prevent electrical leakage between the cell terminals.

(2) Remove the vent plugs and check that the vent holes are clear.

(3) Check the electrolyte level and top up as necessary. The correct level is just over the top of the separators. Do not overfill or acid will escape through the vent holes with detrimental effect to the connections and to adjacent parts of the vehicle.

(4) Use only distilled water for topping up.

NOTE: Never use a naked light when examining the battery, as the gases given off by the battery are dangerously explosive.

(5) If the battery required an excessive amount of topping up, the cause should be sought. If overcharging is suspected, then check the output of the alternator.

If one cell in particular is at fault, check the case for cracks. Never transfer electrolyte from one cell to another.

(6) Keep the terminals clean and apply a small amount of petroleum jelly to the terminals to prevent corrosion.

TO REMOVE AND INSTAL

(1) Loosen the clamp nut and remove the negative terminal from the battery post.

(2) Remove the positive terminal in the same manner.

(3) Remove the battery holding clamp and lift the battery from the vehicle.

Installation is a reversal of the removal procedure with attention to the following points:

Do not overtighten the clamp nuts and make sure of correct polarity.

After installation coat the terminals with petroleum jelly to prevent corrosion.

TO CLEAN BATTERY CASE

(1) Remove the battery from the vehicle as previously described.

(2) Pour hot water over the battery being careful not to pour water through the vent holes of the filler caps.

(3) Wipe the battery case clean.

(4) If there is a crack in the case or around the base of the terminal(s) the faulty components should be repaired or renewed. Take the battery to an automotive electrical shop or battery agent for the necessary servicing.

TO CLEAN BATTERY CARRIER

If the battery electrolyte has overflowed and contaminated the surrounding body panels, it will be necessary to remove this contamination and repaint the surfaces where necessary. The contamination can be neutralised by using an alkaline solution consisting of two tablespoons of washing soda to a quart of boiling water. Cloudy ammonia can also be used in concentrated form. Both these items are readily available at grocery stores.

After neutralising the contaminated body panels allow them to dry. Clean off the old paint and repaint the surfaces with an antirust based paint.

TO TEST

Use a hydrometer to check the specific gravity of the battery electrolyte. Refer to Specifications for a fully charged and fully discharged battery.

If the battery is in a low state of charge or completely flat take it to an automotive electrical shop to have it charged and load tested.

8. ALTERNATOR

Special Equipment Required:
To Test on Vehicle – 0–60–0 Ammeter, voltmeter
To Dismantle – Bearing puller, soldering iron
To Assemble – Press, soldering iron

DESCRIPTION

In the alternator the field and pole shoe assembly is the moving part and is shaped to form the rotor. Since only a low amperage current flows between the slip rings on the rotor shaft and the brushes, wear on brushes and slip rings is very slight and maintenance is reduced to a minimum.

The output current is generated in the fixed stator windings and is a three phase alternating current (AC). The stator windings, which are wound on a laminated soft iron former, are star connected and fitted between the end brackets.

As it is not possible to recharge a storage battery with alternating current, it is necessary to rectify the output of the stator windings to direct current (DC). This is done by a bank of diodes mounted within the alternator slip ring end bracket.

The output of the alternator is governed by the regulator and built in characteristics of the alternator. The regulator and brush holder unit is fitted to the outside of the slip ring end bracket, and is non-adjustable.

An electrical cut out unit is not necessary with the alternator charging system as the diodes prevent a reverse current flow through the alternator.

SERVICE PRECAUTIONS

(1) Make sure the battery is connected with the correct polarity to earth. Refer Specifications.

(2) Do not short out or ground any terminals common to the charging circuit.

(3) Always disconnect the battery before connecting a battery charger.

(4) If a booster battery is used always connect it in a parallel circuit i.e. positive to positive (+ to +) and negative to negative (– to –) to maintain a 12 volt supply pressure.

(5) Never disconnect the battery or terminals in the charging circuit while the engine is running.

(6) Regularly check the drive belt tension.

(7) Keep the battery terminals clean and all electrical connections tight.

(8) Disconnect the battery and alternator when electric welding on the vehicle.

TO TEST ON VEHICLE

If the ignition warning lamp stays on after the engine has been started and run at approximately 1000 rpm, carry out the following tests and precautions:

(1) Stop the engine, do not open circuit any parts of the charging system while the engine is running.

(2) Check the condition and adjustment of the drive belt.

(3) Clean the battery terminals, tighten all electrical connections, check the wiring for shorts to earth and/or bridged circuits and make sure the battery is fully charged.

(4) Start the engine and allow it to run until normal operating temperature is reached.

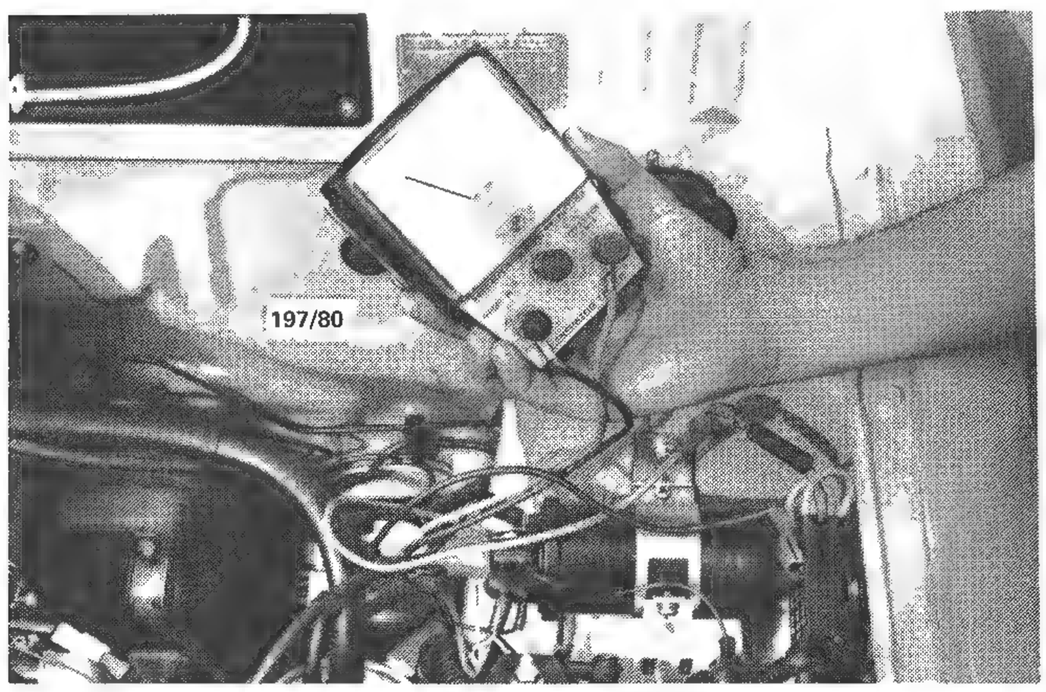

Check the output current of the alternator using an ammeter.

(5) Stop the engine and disconnect the negative battery terminal.

(6) Disconnect the battery fusible link at the alternator side of the link.

NOTE: This is the fusible link marked Black/Main.

(7) Connect one lead of a 0–60–0 ammeter to the alternator output lead and the other lead of the ammeter to the disconnected terminal of the fusible link.

NOTE: It will be necessary to use a suitable adaptor to extend the terminals on the fusible link and output lead.

(8) Reconnect the battery negative terminal and connect a 0–20 voltmeter across the battery terminals.

(9) Switch on all lamps and allow them to burn for approximately five minutes to reduce the charge in the battery and to apply a load to the circuit.

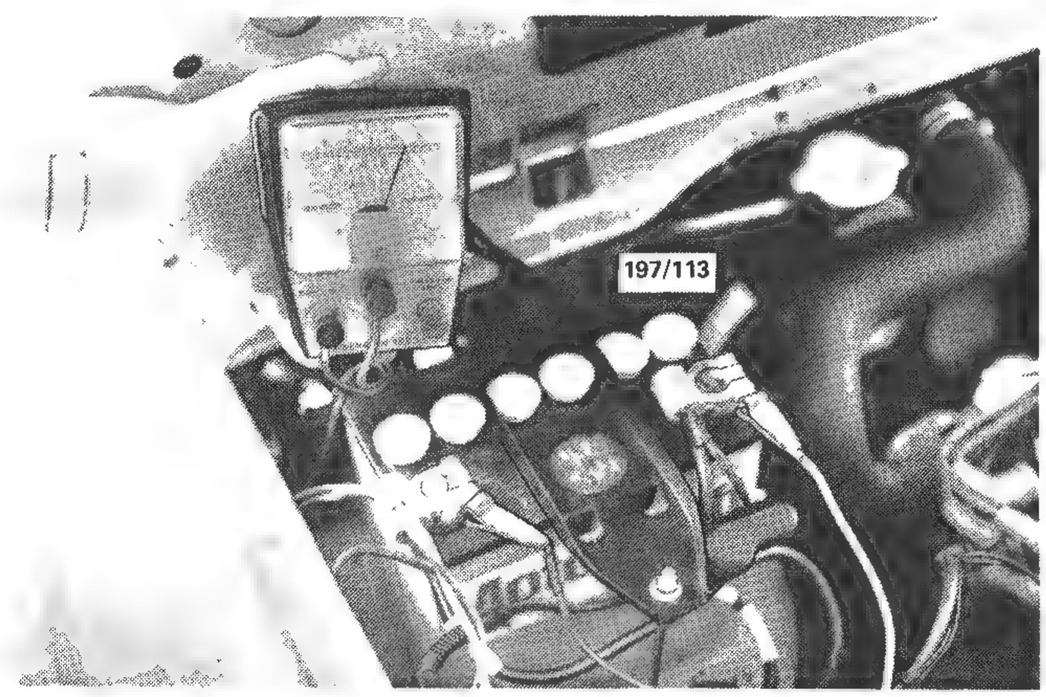

With the engine running at approximately 2000 rpm, check the charging system output voltage by connecting a voltmeter across the battery terminals.

(10) Start the engine and gradually increase the engine speed to approximately 2500 rpm. The reading on the ammeter should be approximately 75 per cent of the rated output of the alternator (See Specifications).

(11) Switch off all lamps and run the engine at 1500–2000 rpm until the indicated charge is below 10 amps. The voltmeter should now read between 14 and 15 volts.

NOTE: Should the alternator fail to reach the specified output the unit will have to be removed and overhauled or a replacement unit fitted. Should the voltage reading be above 15 or below 14 volts, the regulator will have to be renewed.

TO REMOVE AND INSTAL

(1) Disconnect the battery negative terminal.

(2) Remove the air cleaner assembly from the vehicle as described in the Fuel System section.

(3) Disconnect the terminal block at the alternator by pulling on the terminal block, not the wires.

(4) Remove the nut and washer from the B ter-

minal on the alternator and disconnect the output lead.

(5) Remove the adjusting bolt from the alternator.

(6) Loosen the mounting bolt, push the alternator towards the engine and slip the drive bell from the pulley.

(7) Remove the mounting bolt whilst supporting the alternator with the other hand. Remove the alternator.

Installation is a reversal of the removal procedure with attention to the following point:

Do not over tension the drive belt. See the Engine Tune-up section for correct belt adjusting procedure.

TO DISMANTLE

Motorcraft

(1) Remove the alternator from the vehicle as previously described.

(2) Scribe a mark across the drive end bracket, stator and slip ring end bracket to facilitate correct alignment during assembly.

(3) Remove the four nuts from the four through bolts attaching the plastic end cap to the alternator and remove the plastic end cap.

(4) Clamp the alternator pulley nut in a vice with the alternator in a vertical position.

(5) Remove the two screws attaching the brush holder/regulator, unplug the radio suppressor if applicable and remove the nuts from the B terminal.

(6) Carefully, with a half twisting motion, remove the brush holder/regulator from the end cover and unplug the wire connector.

(7) Remove the alternator from the vice and remove the four through bolts.

(8) Using a soft faced hammer, carefully tap the slip ring end bracket to separate the slip ring end bracket and stator from the rotor and drive end bracket.

(9) Holding the rotor in a vice with suitable jaw protectors between the vice jaws and the rotor, remove the pulley retaining nut and withdraw the drive pulley halves, fan and spacers. Noting their installed positions.

(10) Using a soft faced hammer, drive the rotor and shaft assembly out of the drive end bracket.

(11) If the drive end bracket bearing is to be renewed, remove the securing screws and remove the bearing retaining plate. Withdraw the bearing from the drive end bracket.

(12) Working inside the stator, remove the three screws attaching the heat sink to the slip ring end bracket and withdraw the stator with diode pack and heat sink attached from the end bracket. Note the installed positions of the screws and washers.

(13) Using a hot soldering iron and a pair of long nosed pliers, unsolder the stator leads from the diode pack.

NOTE: When soldering is necessary on an alternator, to avoid damage, do not exceed 150 degrees C on the diodes. Always grip the diode stem with a suitable pair of long nosed pliers which then act as a heat dissipator.

(14) Using a suitable puller, remove the bearing from the slip ring end of the rotor shaft.

NOTE: The regulator and brush holder are combined into one unit. This unit is attached to the slip ring end bracket and although the brushes are replaceable by unsoldering the brush wires from the regulator body, the regulator is not a serviceable unit and should be replaced when found faulty.

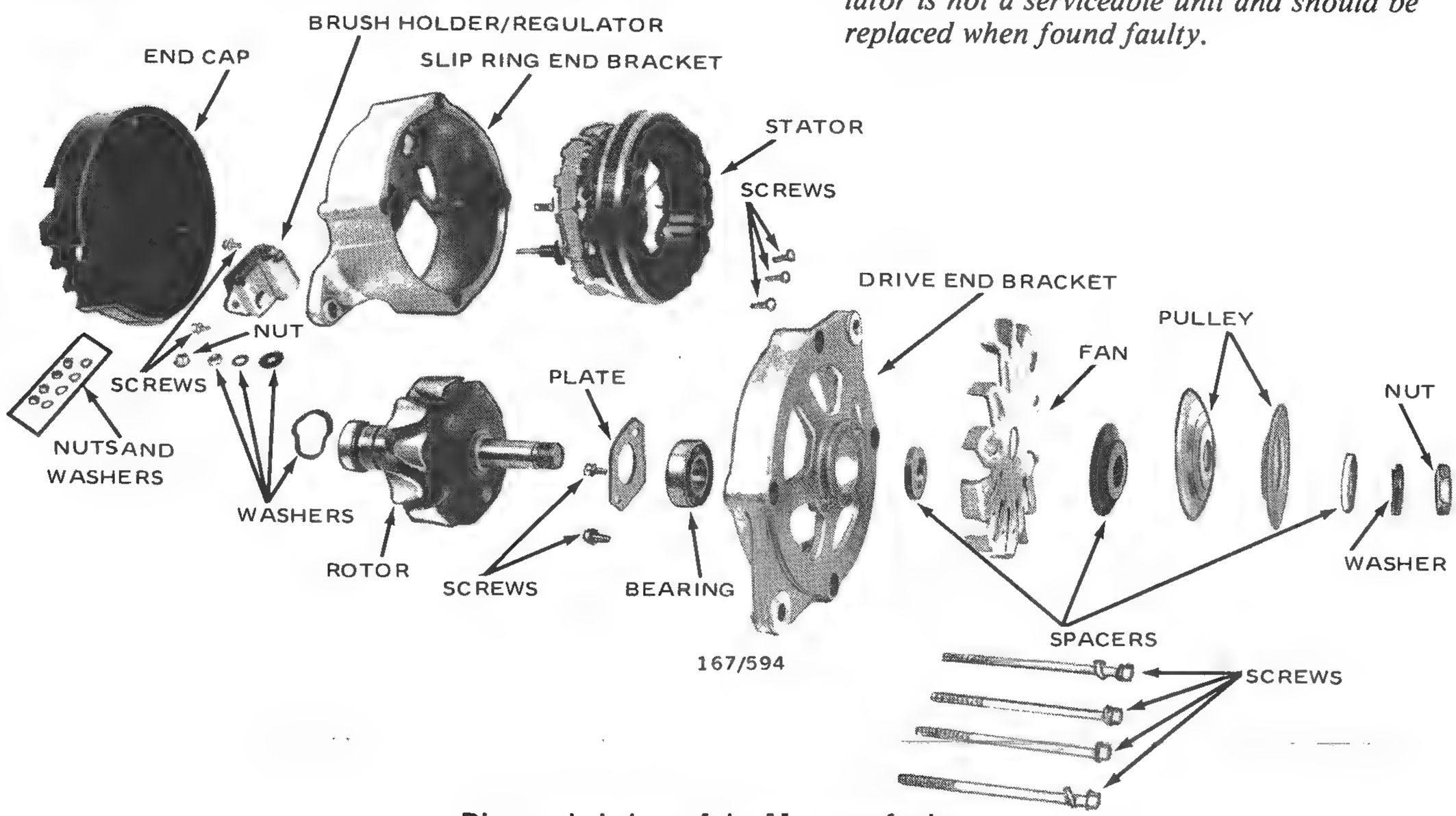

Dismantled view of the Motorcraft alternator.

Mitsubishi

(1) Remove the alternator from the vehicle as previously described.

(2) Scribe a mark across the drive end bracket, stator and slip ring end bracket to facilitate correct alignment during assembly.

(3) Remove the three long screws securing the drive end bracket to the slip ring end bracket and withdraw the drive end bracket, rotor and pulley assembly.

(4) Holding the rotor in a vice with suitable protection between the vice jaws and the rotor, unscrew and remove the drive pulley retaining nut and washer.

(5) Withdraw the drive pulley, fan, spacer and cup washer from the rotor shaft.

(6) Using a soft faced hammer, drive the rotor and shaft assembly out of the drive end bracket and remove the second cup washer from the shaft.

(7) If the drive end bracket bearing is to be renewed, take out the three securing screws, remove the bearing retaining plate and press the bearing from the drive end bracket.

(8) Remove the output terminal nut and suppressor from the slip ring end bracket.

(9) Working inside the slip ring end bracket remove the screws securing the brush holder and rectifier assembly to the end bracket and withdraw the stator from the end bracket.

(10) Where necessary, to test the diodes and stator, unsolder the stator leads from the rectifier assembly and brush holder.

(11) Remove the rectifier and brush holder assemblies from the stator.

NOTE: Do not apply undue heat to the connections as damage may result to the diodes contained in the rectifier assembly.

(12) Using a suitable puller, remove the bearing from the slip ring end of the rotor shaft.

TO CLEAN PARTS

(1) Do not immerse units of the alternator in cleaning solvents as damage to the windings may result.

(2) The end brackets may be washed in kerosene or similar cleaning fluid after they have been completely dismantled from the unit. They should be thoroughly dried after cleaning.

(3) Compressed air can be used to carefully blow out the dust from the stator winding and the field winding on the rotor.

(4) Slip rings that are burnt or scored should be polished using very fine glass paper.

(5) Clean the brushes and brush holder using a petrol damp rag and check and remove any burrs from the holder.

(6) Check the sealed type ball bearings for wear,

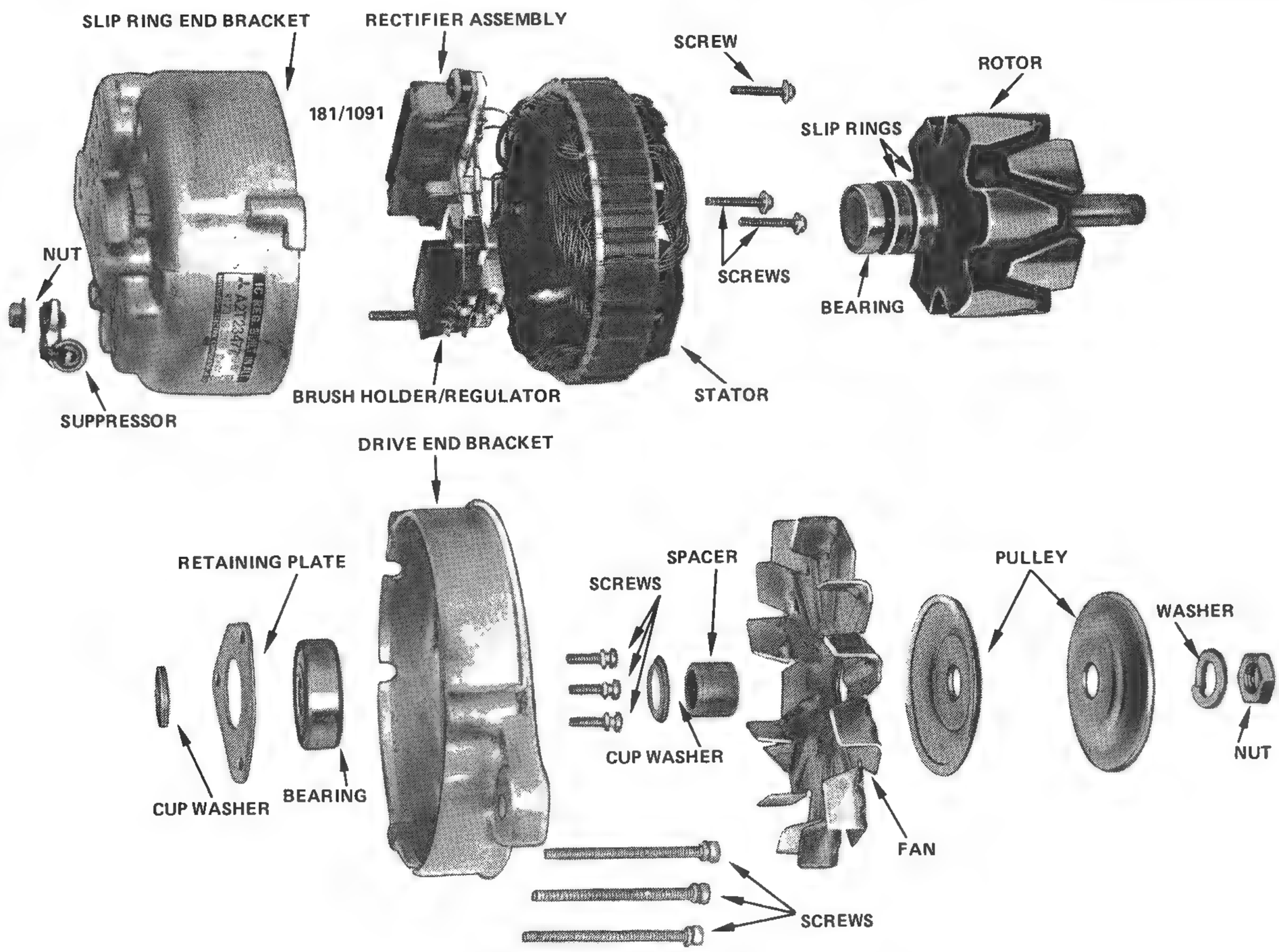

Dismantled view of Mitsubishi alternator.

roughness and lack of lubrication and renew as necessary.

Unsealed type ball bearings if still serviceable may be lubricated with high melting point grease and installed for further service.

TO CHECK AND TEST COMPONENTS

All parts being electrically tested should be resting on a non-conductive pad.

Field Windings and Rotor Assembly

(1) The insulation to earth test is done with an ohmmeter. Connect one of the test prods to one of the field wires or slip rings and the other test prod to one pole piece of the rotor.

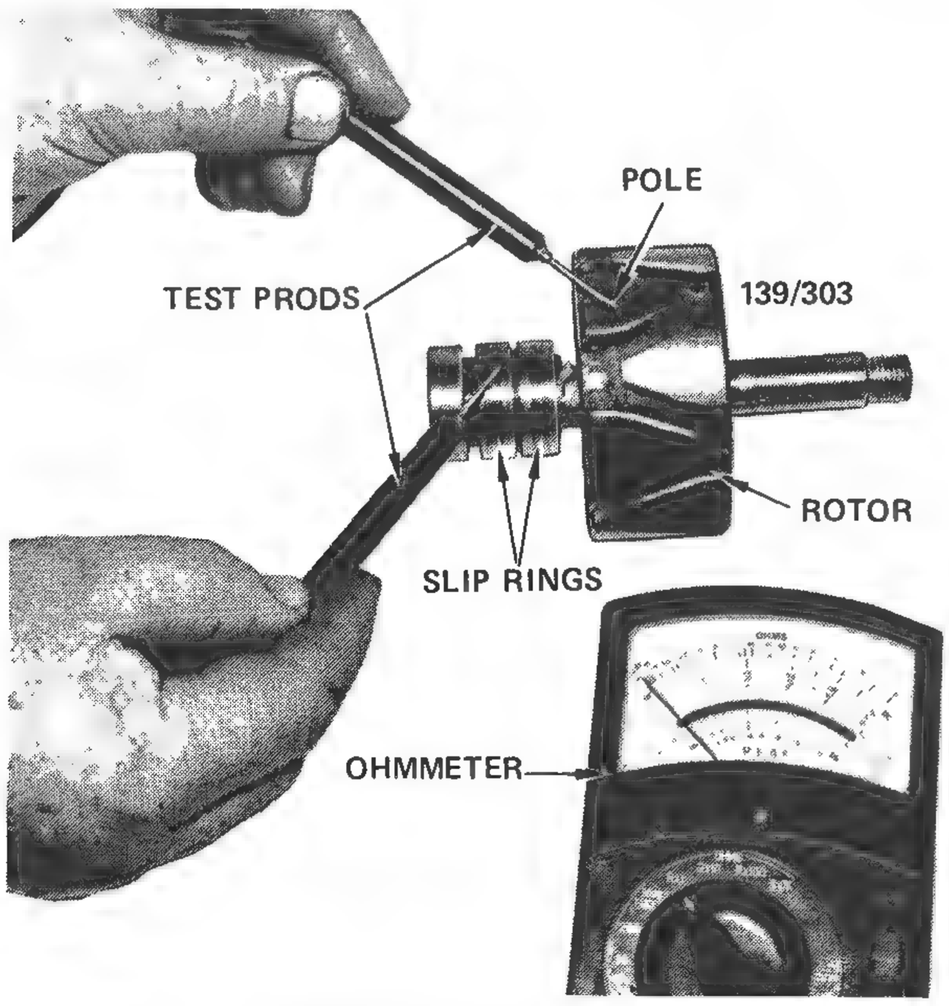

Using ohmmeter to test field winding insulation.

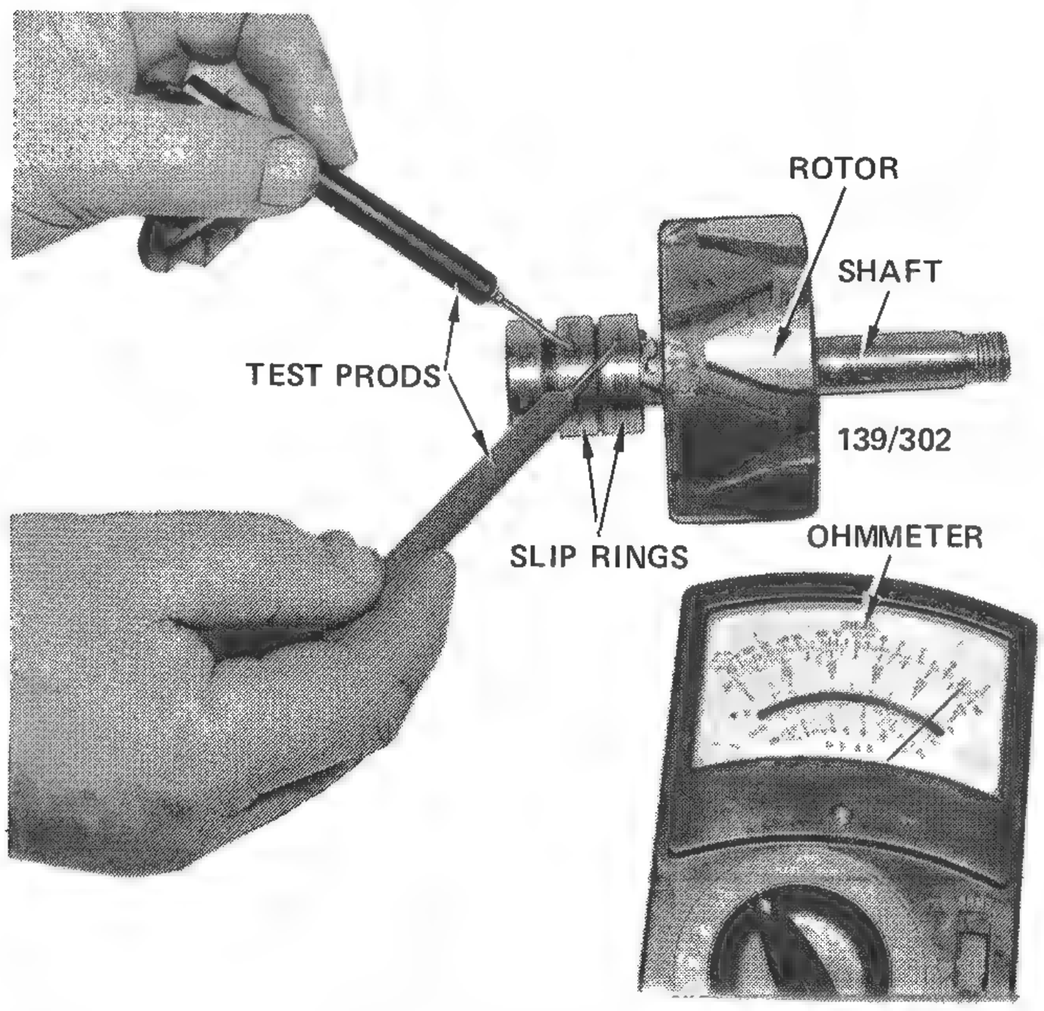

Using ohmmeter to test bridging or internal shorting of rotor fields.

(2) If the ohmmeter shows a reading other than infinite and no visual earthing can be seen and rectified, a new rotor assembly will have to be fitted.

(3) Using an ohmmeter, check the rotor winding resistance by connecting the test prods to the slip rings and checking the resistance of the windings. If the resistance is not within Specifications, renew the rotor assembly.

Stator Windings

The stator test is carried out using a ohmmeter and a test lamp.

(1) The stator leads must be detached from the rectifier assembly.

(2) Connect one test probe of the ohmmeter to one stator lead and the other test probe to another stator lead. Note the ohmmeter reading.

(3) Repeat the operation to the remaining leads alternatively to check each phase.

(4) If there is any variation in resistance between phases it will be necessary to renew the stator assembly.

(5) Connect a jumper lead from the negative terminal of a charged 12 volt battery to the stator winding frame. Connect one end of a test lamp to the stator leads, one at a time.

(6) Should the test lamp light or burn dimly a short circuit is indicated and the stator assembly must be renewed.

Diodes

The diodes may be tested after disconnection. Testing can be done by using a 12 volt battery and a 1.5 watt bulb in series with a jumper lead.

(1) Connect a jumper lead from the negative terminal of a charged battery to the bracket holding the diode to be tested.

(2) Connect one end of a test lamp to the battery positive terminal and the other end of the lamp to the diode lead. Note whether the lamp is illuminated and then reverse the connections on the battery.

(3) If the lamp was illuminated in both directions or was not illuminated at all, the diode is faulty and the rectifier assembly must be renewed.

Brush Springs and Brushes

(1) Check the brush springs for overheating and distortion, check for binding in the brush holder.

(2) Check the brush length and renew as necessary. Refer to Specifications for correct dimensions.

TO ASSEMBLE

Motorcraft

The assembling procedure is a reversal of the dismantling operation with attention to the following points:

(1) Fit a new bearing onto the slip ring end of the rotor shaft.

(2) Using a hot soldering iron and a long nosed

pair of pliers as a heat sink, solder the stator leads to their respective terminals on the diode pack.

(3) Fit an insulating washer and spacer to the B+ terminal post and place the diode pack and stator assembly onto the slip ring end bracket. Secure the diode pack to the slip ring end bracket with the screws.

(4) Working on the exterior of the slip ring end bracket, instal an insulating washer, flat washer and spring washer on the B+ terminal and secure it with the retaining nut.

(5) Fit a new bearing to the drive end bracket and secure the bearing with the retaining plate and screws.

(6) Hold the rotor in a vice with suitable protection.

(7) Instal the drive end bracket and bearing onto the shaft, instal the fan and pulley assembly, as noted during the dismantling procedure, and secure with the retaining nut.

(8) Position the wave washer in the bearing recess of the slip ring end bracket and insert the rotor in the stator and end bracket assembly.

(9) Align the marks made at dismantling and instal and tighten the through screws.

(10) Connect the lead to the brush holder and regulator assembly. Fit the regulator and brush holder assembly to the slip ring end bracket and tighten the retaining screws.

(11) Fit the alternator to the vehicle and test its operation as previously described.

Mitsubishi

The assembling procedure is a reversal of the dismantling procedure with attention to the following points:

(1) Where necessary, using a hot soldering iron and a long nosed pair of pliers as a heat sink, solder the stator leads to their respective terminals on the rectifier assembly.

(2) Secure the brush holder and rectifier assembly to the slip ring end bracket using the screws and fit the suppressor and retaining nut to the output terminal.

(3) Fit a new bearing to the drive end bracket and secure the bearing with the retaining plate and screws.

(4) Fit a new bearing on the slip ring end of the rotor shaft.

(5) Hold the rotor in a vice with suitable protection and instal the first cup washer followed by the drive end bracket, second cup washer, spacer, fan and the pulley halves onto the rotor shaft. Fit the spring washer and pulley nut and tighten the nut to Specifications.

(6) Push the brushes back into their holder and insert a stiff piece of wire through the small hole in the slip ring end bracket to secure the brushes.

(7) Insert the rotor in the stator and end bracket.

(8) Align the marks made at dismantling and instal and tighten the screws.

(9) Remove the wire retaining the brushes to their holder.

(10) Fit the alternator to the vehicle and test its operation as previously described.

9. STARTER MOTOR

DESCRIPTION

The starter motor is the induced pole type with three brushes and four pole shoes with field coils.

A solenoid switch is attached to the starter drive end bracket. The solenoid plunger is connected to the over-running clutch and drive pinion through a lever and spring arrangement.

When the solenoid windings are energised, the plunger acting on the lever and pivot engages the drive pinion with the flywheel ring gear and at the same time closes the switch supplying power from the positive side of the battery to the starter motor field coils and armature to operate the motor.

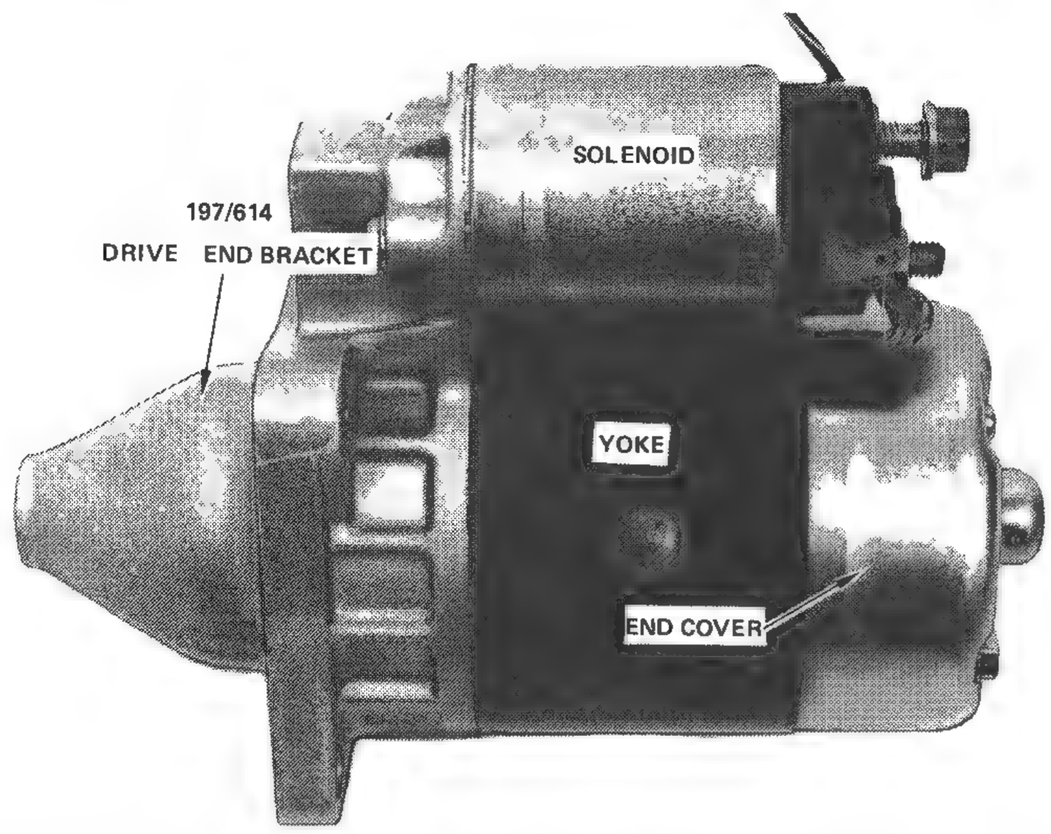

View of the Mitsubishi starter motor removed from vehicle.

As the engine fires, the over-running clutch of the drive pinion assembly prevents high speed rotation of, and possible damage to, the starter armature if the solenoid winding are not immediately de-energised by releasing the switch key.

The starter solenoid switch windings are energised by the key operated combination ignition and starter switch.

TO TEST ON VEHICLE

Should the starter fail to operate when the switch is moved to the start position check the following points:

(1) Check the battery condition and state of charge, refer to Battery heading in this section.

(2) Clean the battery terminals, taking particular care to remove the scale from the positive (+) terminal post and terminal.

(3) Check the earth connections for tightness and cleanliness.

(4) Switch on the headlamps and operate the starter control switch. If the lamps go dim but the starter is not heard to operate, it could indicate that a short circuit or high resistance has developed in the starting system which could be either external or internal.

Also check that the engine is not "seized" or "locked up" as this condition would give the same indication as above.

(5) If the lamps do not go dim and the starter does not operate this would indicate an open circuit such as a broken or disconnected wire or a switch not operating. If the vehicle is fitted with automatic transmission operate the starter control switch and move the selector lever through all the gear selection range. If the starter operates in any position other than N or P, the neutral safety switch is faulty.

(6) Check all the external wiring to make sure the fault is not external, if the external circuit proves satisfactory, indicating that the problem is in the starter assembly, the unit will have to be removed and bench tested.

TO REMOVE AND INSTAL

(1) Raise the engine bonnet and fit fender covers to both front fenders.

(2) Remove the air cleaner assembly as described in the Fuel System section.

(3) Disconnect the negative battery lead.

(4) Disconnect the wires from the starter solenoid.

(5) Remove the three starter motor retaining bolts and remove the starter motor from the vehicle.

Installation is a reversal of the removal procedure.

TO DISMANTLE

(1) With the starter motor removed from the vehicle, disconnect the field connector strap from the terminal on the solenoid switch.

(2) Remove the solenoid attaching screws and withdraw the solenoid, and where fitted the adjusting shims, from the drive end bracket.

(3) Remove the two through bolts and the two brush holder retaining screws and separate the end cover from the yoke. Note the number and location of the adjusting shims on the end of the armature shaft.

(4) Withdraw the yoke and field coil assembly together with the brush holder and brushes from the armature and drive end bracket.

(5) Slide the drive end bracket from the armature shaft until the shaft clears the bearing bush in the bracket, at the same time maneouvre the drive pinion lever away from the drive pinion assembly and place the armature and drive pinion assembly aside.

(6) Remove the drive pinion lever, spring pads and spring from the drive end bracket.

(7) Support the armature in a vertical position with the drive pinion assembly uppermost.

(8) Using a suitable tubular drift or socket, tap the stop collar towards the drive pinion and clutch assembly and remove the snap ring from the armature shaft.

(9) Remove any burrs from the shaft and withdraw the stop collar and the drive pinion and clutch assembly from the armature shaft.

(10) Clean all parts thoroughly but do not immerse the yoke, armature, solenoid or drive clutch in cleaning fluid.

(11) Visually check all parts for wear and burned insulation.

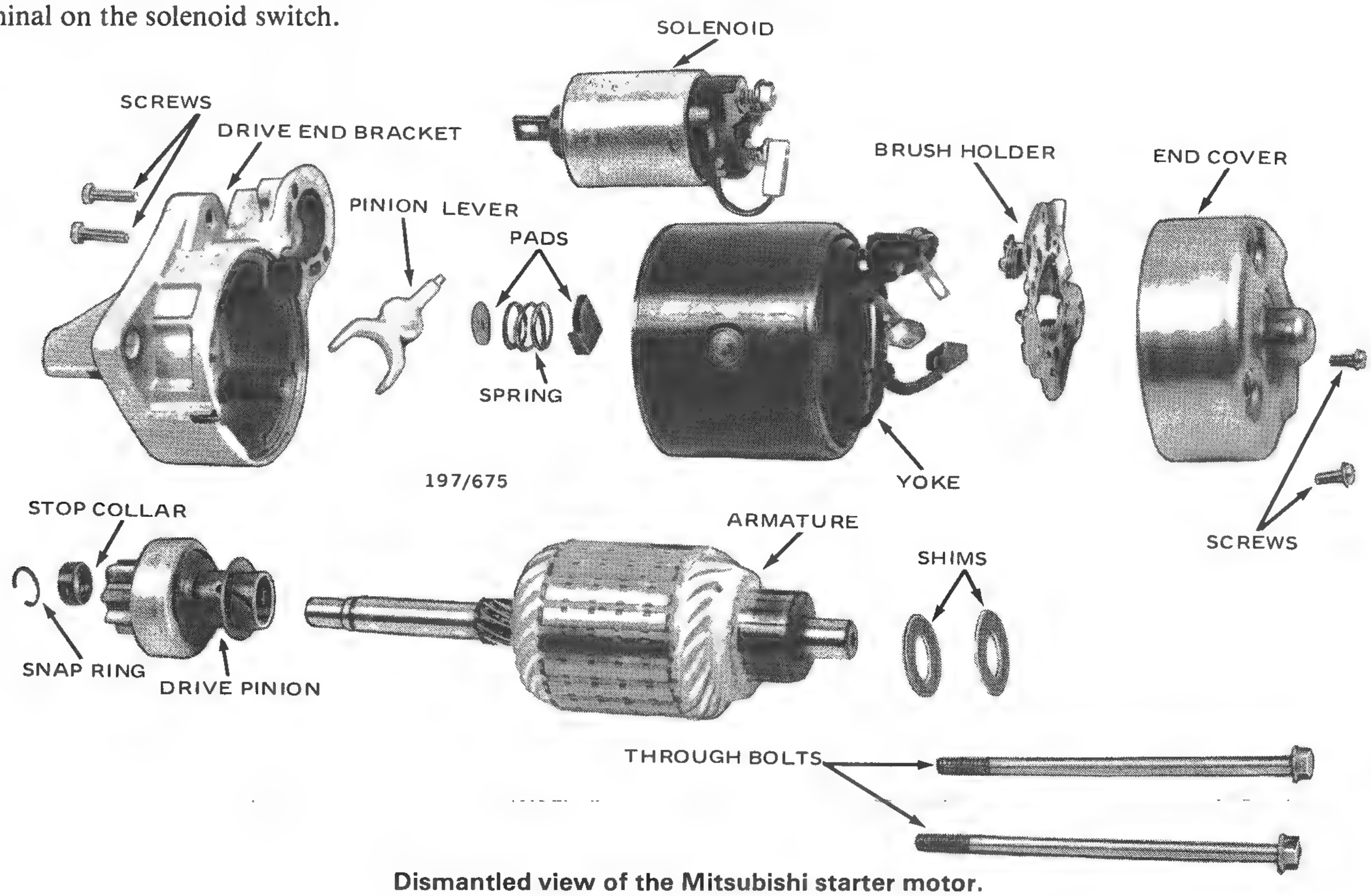

Dismantled view of the Mitsubishi starter motor.

TO CHECK AND INSPECT

(1) With the starter motor dismantled check the brush holder insulation using an ohmmeter.

Connect one test lead on the brush holder positive side and the other lead on the negative side. If there is any indication of leakage the ohmmeter will show a reading other than infinite. Repair or renew the brush holder if a short circuit is evident.

(2) Check the brushes for adequate length. Brushes should be renewed when their length is below Specifications. They should be a free sliding fit in the brush holders.

(3) Check the brush springs, and compare with new springs.

(4) Check that the commutator is free from pitting and burning, clean with a petrol moistened cloth and polish with a strip of fine glass paper.

A badly worn commutator may be cleaned up by mounting in a lathe, spinning at high speed, and a light cut taken with a very sharp tool. After turning, undercut the insulation between the segments.

(5) Check the armature for short circuit, using a ohmmeter.

(6) Place one of the test leads on the armature shaft or core and move the other lead around the circumference of the commutator. If the ohmmeter shows a reading at any point the armature is faulty and should be renewed.

(7) Test the field coils for continuity by connecting the test leads in series with the field windings.

Failure of the ohmmeter to show a reading indicates an open circuit in the wiring of the field coils.

(8) Check the field coil for ground by placing one test lead on the field coil lead and the other lead on the yoke. If the ohmmeter shows a reading the field coils and yoke assembly are faulty and will have to be renewed.

(9) Check the drive assembly clutch pinion teeth for wear, scoring or chipping. A clutch in good condition should take up the drive in one direction only. It should rotate easily and smoothly in the non-drive direction and the assembly should move smoothly along the armature helical splines.

NOTE: Do not wash the drive assembly or clutch in solvent as this will destroy the clutch lubricant and cause early failure of the unit.

(10) Check the armature shaft bushes for wear and renew as necessary. The old bushes must be removed and the new ones pressed into the end brackets using a polished mandrel of the exact diameter of the armature shaft.

NOTE: The new bushes must not be reamed to size, as reaming will impair the porosity of the bushes and cause early failure. New bushes should be allowed to stand immersed in clean light engine oil for one hour before fitting.

TO ASSEMBLE

Assembly is a reversal of the dismantling procedure with attention to the following points:

(1) Lubricate the helix on the armature shaft lightly with graphite grease and fit the drive pinion and clutch assembly to the armature shaft.

(2) Fit the stop collar and snap ring, slide the stop collar over the snap ring to lock the snap ring in position.

(3) Lubricate the bushes in both end brackets sparingly with engine oil.

(4) To instal the brush holder with the brushes fitted it will be necessary to push the brushes against the brush spring tension into the holder and then slide the assembly onto the commutator.

(5) When fitting the end cover, ensure that the field connector strap and insulator are seated correctly in the end cover.

(6) Instal the solenoid plunger to the pinion lever.

(7) Instal the solenoid with the original adjusting shims removed on dismantling.

(8) Do not connect the field lead until the adjusting of the pinion stop clearance is completed.

(9) Use a 12 volt battery and jumper leads and energize the solenoid to move the pinion into its mesh position.

(10) Measure the clearance between the pinion and the stop collar. Refer to Specifications for the correct clearance.

NOTE: Only hold the solenoid energized long enough to make the measurement as damage to the solenoid could occur from overheating.

(11) If the pinion stop clearance is not within Specifications, adjust the pinion lever position as follows:

Remove the solenoid and add or subtract adjusting shims between the solenoid and the end bracket, add shims to decrease the clearance, remove shims to increase the clearance.

(12) When the pinion stop clearance is correctly adjusted connect the field wire to the solenoid.

10. DISTRIBUTOR

DESCRIPTION

The distributor is driven by an offset drive dog from the rear of the camshaft. Mechanical advance and vacuum advance systems are incorporated in the distributor. Mechanical advance is by centrifugal weights mounted on a shaft and governed by springs.

The vacuum advance consists of a diaphragm unit mounted externally onto the distributor body with a linkage to the breaker plate from the diaphragm. Advance is controlled by engine loadings.

TO REMOVE AND INSTAL

NOTE: Do not turn the engine in the reverse direction to normal rotation. Turn the crankshaft only clockwise as viewed from the pulley end of the engine.

(1) Remove the distributor cap and secure it out of the way.

Distributor with cap and rotor arm removed.

(2) Turn the engine until the rotor arm points in the direction that would fire No. 1 cylinder and the mark on the crankshaft pulley aligns with the tdc mark on the timing scale.

(3) Disconnect the distributor low tension wire at the connector and the vacuum advance hose at the advance unit.

(4) Remove the screw attaching the radio suppressor and move the suppressor out of the way.

(5) To assist in installing the distributor in its original location, mark the distributor body in relationship to the cylinder head and the rotor arm in relation widen ship to the distributor body.

(6) Remove the bolt attaching the distributor body to the cylinder head and withdraw the distributor from the engine.

Installation is a reversal of the removal procedure with attention to the following points:

Ensure that the engine has not been rotated.

Align all parts as marked prior to removal.

Slide the distributor into the cylinder head and secure the distributor with the securing bolt.

Adjust the dwell angle and ignition timing as outlined in the Engine Tune-up section.

TO DISMANTLE

(1) With the distributor removed from the vehicle, remove the rotor arm and the cap gasket.

(2) Remove the vacuum advance unit mounting screws, remove the diaphragm to breaker plate linkage 'E' clip and remove the vacuum advance unit.

(3) Remove the two screws securing the earth wire between the distributor body and the contact breaker plate and remove the wire.

(4) Remove the remaining contact breaker points retaining screw.

(5) Remove the capacitor attaching screw.

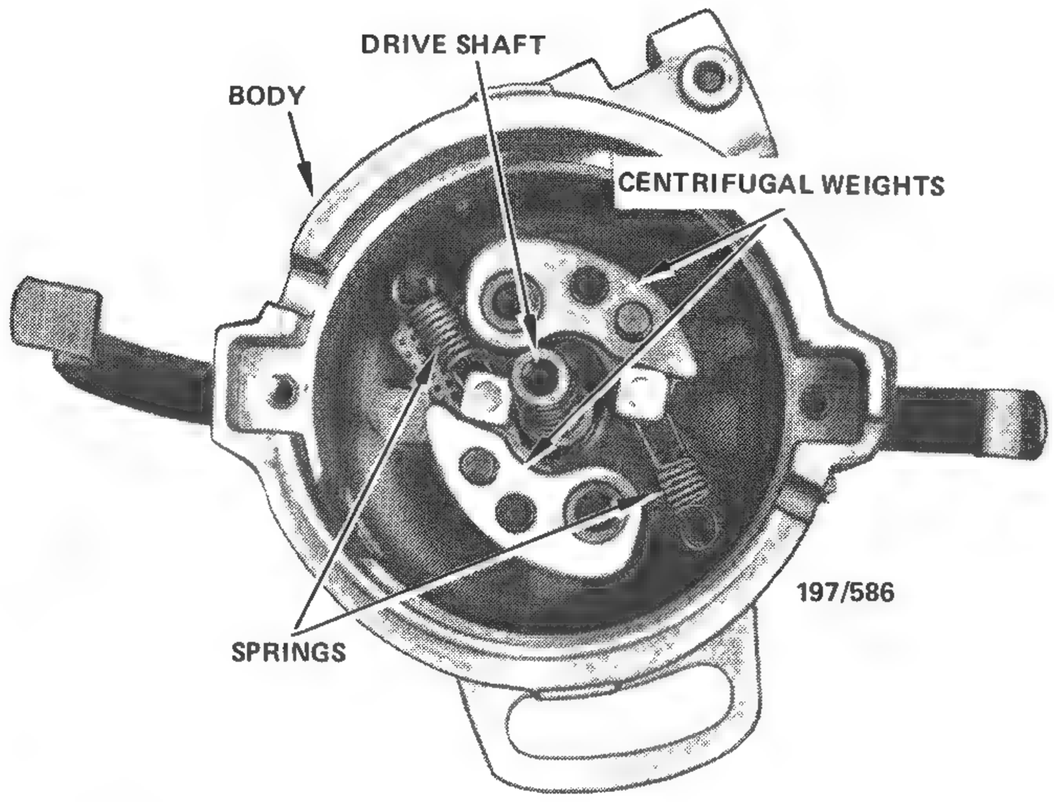

View of distributor centrifugal weights.

(6) Lift the wire harness connector out of the slot in the side of the distributor body.

(7) Remove the harness, capacitor and contact breaker set, as an assembly, away from the distributor. If necessary remove the screw and separate the contact breaker set from the harness and capacitor.

(8) Remove the breaker plate retaining screws and withdraw the breaker plate.

(9) Lift the seal from the top of the cam assembly and remove the cam assembly securing screw.

(10) Mark the relationship of the cam assembly to the drive shaft and remove the cam assembly.

NOTE: It should not be necessary to remove the centrifugal advance weights, springs and drive shaft.

TO CLEAN AND INSPECT

(1) Thoroughly clean all parts with cleaning solvent, taking care not to immerse the distributor body, capacitor or vacuum advance unit in solvent.

(2) Check the contact breaker points for pitting or burning and, if necessary, renew as a set only.

(3) If the contacts are excessively burnt or pitted, renew the capacitor.

NOTE: Points should be cleaned with a contact file or oil stone, never use emery cloth or sand paper.

(4) Check all low tension leads for possible fractures.

(5) Check the distributor shaft and body for wear and renew as necessary. If the clearance between the shaft and body is excessive the shaft and body will have to be renewed.

(6) Check the cams for wear or roughness. Variation in lift between any two cams in excess of 0.05 mm will necessitate renewing the cam assembly.

(7) Check the clearance between the shaft and the cam assembly. Excessive clearance will necessitate the renewal of the shaft and cam assembly.

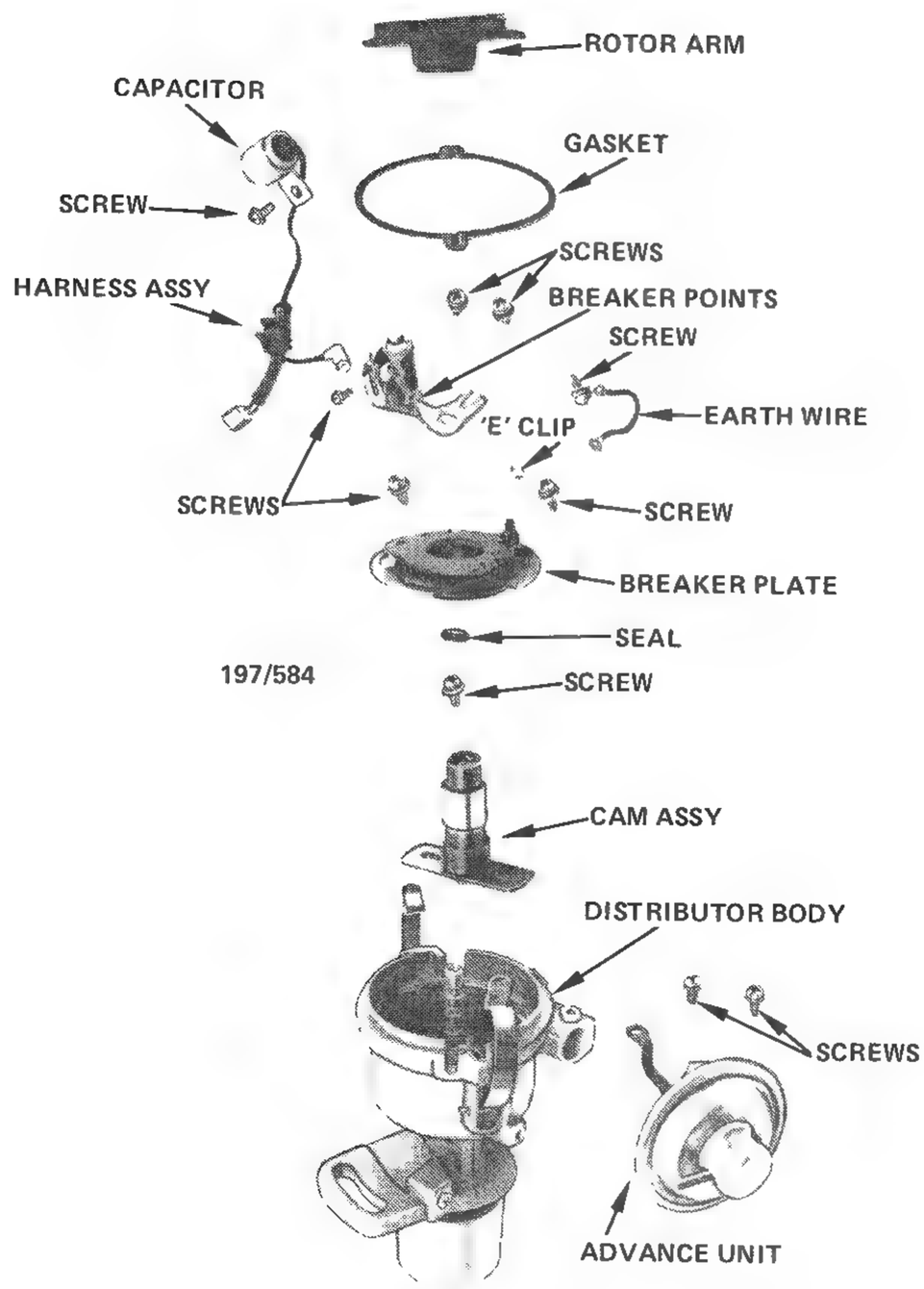

Dismantled view of distributor components.

(8) Inspect the centrifugal advance weights for binding with the pivot pins.

(9) Check the distributor cap for cracks, carbon tracks, burned or corroded terminals.

(10) Check the centre carbon for wear and protrusion.

(11) Check the rotor arm for damage or cracks.

(12) Check the vacuum advance unit for a leaking diaphragm. To do this suck on the inlet pipe and observe the connecting link. The connecting link should move into the diaphragm housing.

TO ASSEMBLE

Assembly is a reversal of the dismantling procedure with attention to the following points:

(1) Apply a small amount of high melting point grease to the advance weight pivot points.

(2) Instal the cam assembly as marked on dismantling, ensuring that the slots in the cam assembly are correctly engaged with the advance weights.

(3) Instal and tighten the cam assembly retaining screw.

(4) Instal the breaker plate and fit the retaining screws.

(5) Instal the vacuum advance unit and connect the link to the pin on the movable breaker plate and lightly lubricate with high melting point grease.

(6) Instal the breaker points and earth lead onto the breaker plate, lightly lubricate the cams and apply a small amount of high melting point grease to the rubbing block of the moving point.

(7) Adjust the contact breaker point gap as outlined in the Engine Tune-up section.

(8) Instal the capacitor and harness assembly.

(9) Secure the earth lead to the distributor body with the retaining screw.

(10) Instal the rotor arm and check that the centrifugal advance weights are free to operate by turning the rotor arm against the advance control springs while holding the drive assembly. When the rotor arm is released it should return freely to the fully retarded position.

If the rotor arm is inclined to stick or does not return to the retard position the cause should be located and rectified.

11. SWITCHES AND CONTROLS

STEERING LOCK AND IGNITION SWITCH ASSEMBLY

To Remove and Instal

(1) Disconnect the battery negative terminal.

(2) Remove the lower dash panel.

(3) Remove the steering column as described in the Steering section.

(4) Using a suitable small cold chisel slot the shear bolt heads and remove the bolts from the steering lock and ignition switch assembly.

(5) Remove the steering lock and ignition switch assembly from the steering column.

Installation is a reversal of the removal procedure with attention to the following points:

Before shearing the bolt heads make sure the steering lock operates correctly and all the positions on the ignition key can be selected with ease.

COMBINATION SWITCH

The combination switch on the steering column comprises a four position wiper and washer switch, a head lamp/turn signal lamp and dipper switch and a hazard warning lamp switch.

Also incorporated in the combination switch is the horn rubbing contact.

To Remove and Instal

(1) Remove the steering wheel as described in the Steering section.

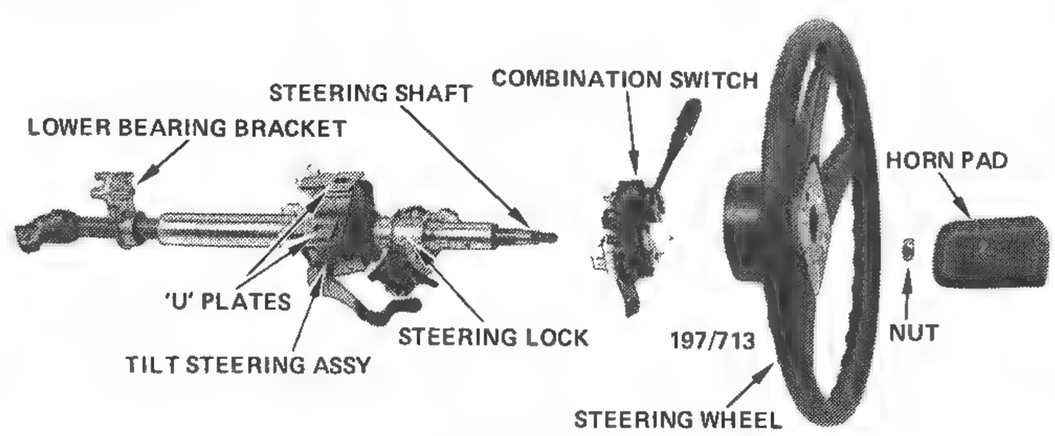

View of steering column with combination switch and steering lock/ignition switch.

(2) Disconnect the four wiring connectors.

(3) Loosen the clamp attaching the switch to the steering column tube and remove the switch unit.

Installation is a reversal of the removal procedure with attention to the following points:

(1) Carefully align the locating tab on the clamp and ensure that the tab is properly engaged in the notch on the steering column.

(2) Prior to installing the steering wheel line up the two lugs of the turn signal lamp cancelling key at the top end of the steering column with the corresponding holes in the steering wheel.

(3) Inspect the spring loaded horn contact and the horn ring on the steering wheel, for excessive wear and renew if necessary.

(4) Lubricate the steering wheel horn ring sparingly with a suitable grease.

HORN PAD

The horn pad on top of the steering wheel is mounted on a metal plate which is secured by three insulated sliding screws. Connection of the plate with the splined metal centre of the steering wheel is prevented by the pressure of an insulated spring.

Pressing the horn pad overrides the spring pressure connecting the live pad mount plate and the earthed splined centre of the steering wheel, thereby closing the electrical circuit and activating the horn.

STOP LAMP SWITCH

The stop lamp switch is located on a bracket under the dash assembly and operated by the brake pedal.

To Test

If the stop lamps fail to light when the brake pedal is depressed, remove the wiring connector at the stop lamp switch and connect a bridging wire between the terminals of the harness connector. If the lamps now operate the switch is faulty and should be renewed.

To Remove and Instal

(1) Disconnect the wiring connector from the stop lamp switch.

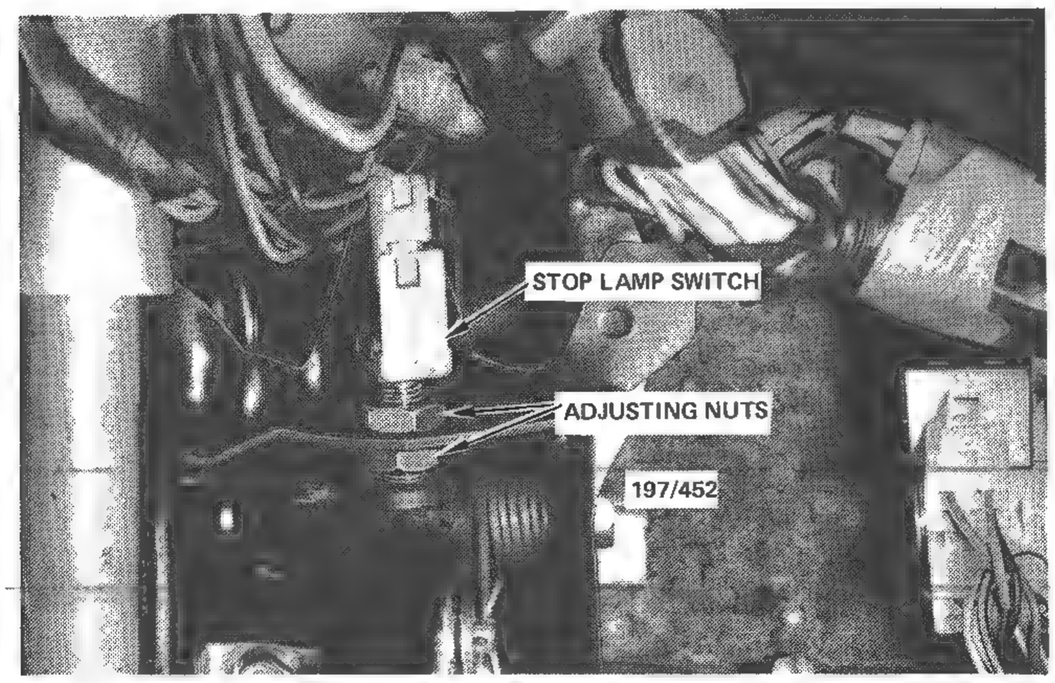

Installed view of stop lamp switch.

(2) Remove the locknut on the switch and screw the switch away from the brake pedal.

Installation is a reversal of the removal procedure.

To Adjust

(1) Disconnect the wiring connector from the stop lamp switch.

(2) Loosen the locknuts on the switch and screw the switch away from the brake pedal.

(3) Adjust the pedal height as described in the Brakes section.

(4) Screw the switch towards the brake pedal arm until it touches the arm, then turn a further half turn.

(5) Tighten the locknuts, reconnect the wiring plug and test the stop lamps.

HANDBRAKE WARNING LAMP SWITCH

To Remove and Instal

(1) Remove the screws attaching the handbrake console and remove the console.

(2) Disconnect the switch wire connector.

(3) Remove the retaining screws and remove the switch.

Installation is a reversal of the removal procedure, ensuring that the handbrake warning lamp is extinguished with the handbrake released.

SWITCH PANEL

To Remove and Instal

The switch panel houses the dash illumination dimmer control switch, the rear demister switch and the rear washer/wiper switch.

(1) Remove the screws at the top of the panel.

(2) With a suitable screwdriver, carefully lift the top lip of the panel over the dash padding, working from left to right.

(3) Remove the panel from the dash assembly taking care not to break the locking clips.

(4) Disconnect the wiring connectors from the back of the switches.

(5) Squeeze the locking tabs on the selected switch for removal and withdraw the switch.

Installation is a reversal of the removal procedure with special care to be taken to instal the panel lower edge first then snap in the top edge.

REVERSE LAMP SWITCH

To Test

NOTE: On vehicles fitted with automatic transmission a combined neutral safety and reverse lamp switch is fitted. Renewal procedures are detailed in the Automatic Transmission section. On vehicles fitted with manual transmission proceed as follows:

(1) Raise the front of the vehicle and support on chassis stands.

(2) Disconnect the switch wiring at the connector.

(3) Connect a bridging wire between the two dis-

connected wires, NOT the switch terminals and switch on the ignition.

(4) If the reverse lamps now operate, the switch is faulty and should be renewed.

To Renew

(1) Raise the front of the vehicle and support on chassis stands.

(2) Disconnect the switch wiring at the connector, detach the wiring harness from the retaining clips.

(3) Unscrew the switch from the transmission case. Instal the new switch in a reverse manner to removal.

NOTE: The reverse lamp switch is situated in the transmission case below the oil level.

Make sure to replenish transmission oil, if any oil is lost during the switch removal operation. For the correct checking and topping up procedures refer to the Lubrication and Maintenance section.

12. SPEEDOMETER CABLE

TO REMOVE AND INSTAL

(1) Raise the bonnet and disconnect the negative battery terminal.

(2) Working in the engine compartment, pull back the rubber cover and disconnect the outer cable from the speedometer cable driven boss on the transmission.

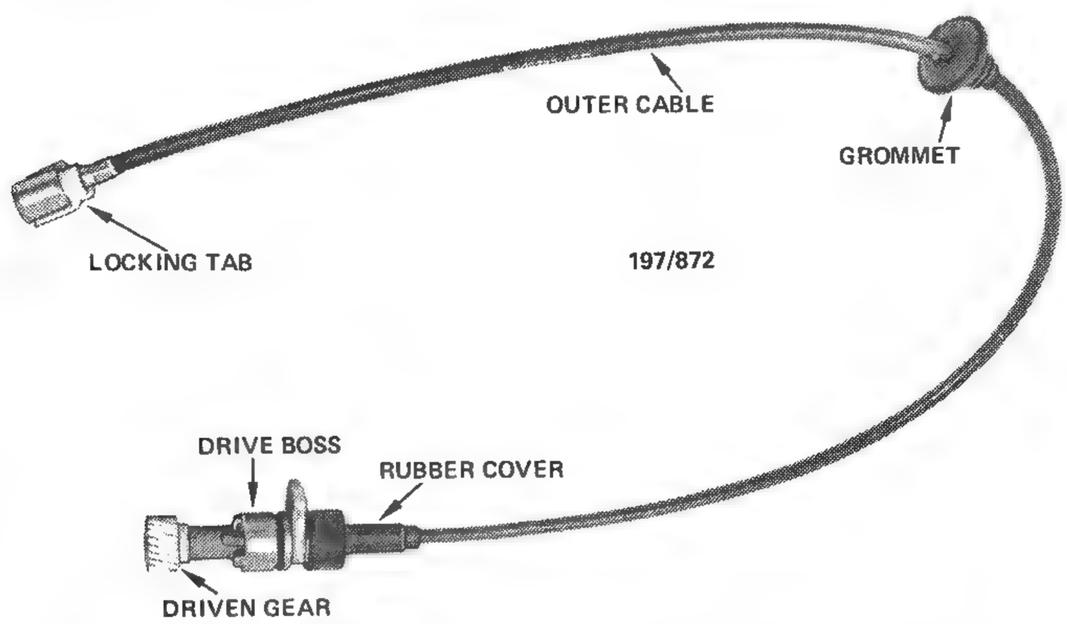

View of speedometer cable and associated components removed from vehicle.

(3) Remove the instrument cluster as described under the Instrument Cluster heading.

(4) Squeeze the locking tab and disconnect the speedometer cable at the speedometer head.

(5) Working in the engine compartment, pull the speedometer cable through the rubber grommet in the bulkhead and remove from the vehicle.

Installation is a reversal of the removal procedure.

13. INSTRUMENT CLUSTER

TO REMOVE AND INSTAL

(1) Disconnect the battery at the negative terminal.

(2) Remove the screws attaching the lower dash panel and remove the panel.

(3) Remove the bolts attaching the upper steering column bracket to the dash assembly.

(4) Remove the upper bolt on the lower steering column bearing and loosen only, the rear (nearest to the bulkhead) bolt.

(5) Carefully lower the steering column to the lower position.

NOTE: On some models an adjustable steering column is fitted. Lowering the column to its lowest position will be sufficient and above steps can be eliminated.

(6) Remove the fan control switch knob by pulling straight towards the operator.

(7) Remove the two heater handle knobs by removing the lock screws on the knobs first.

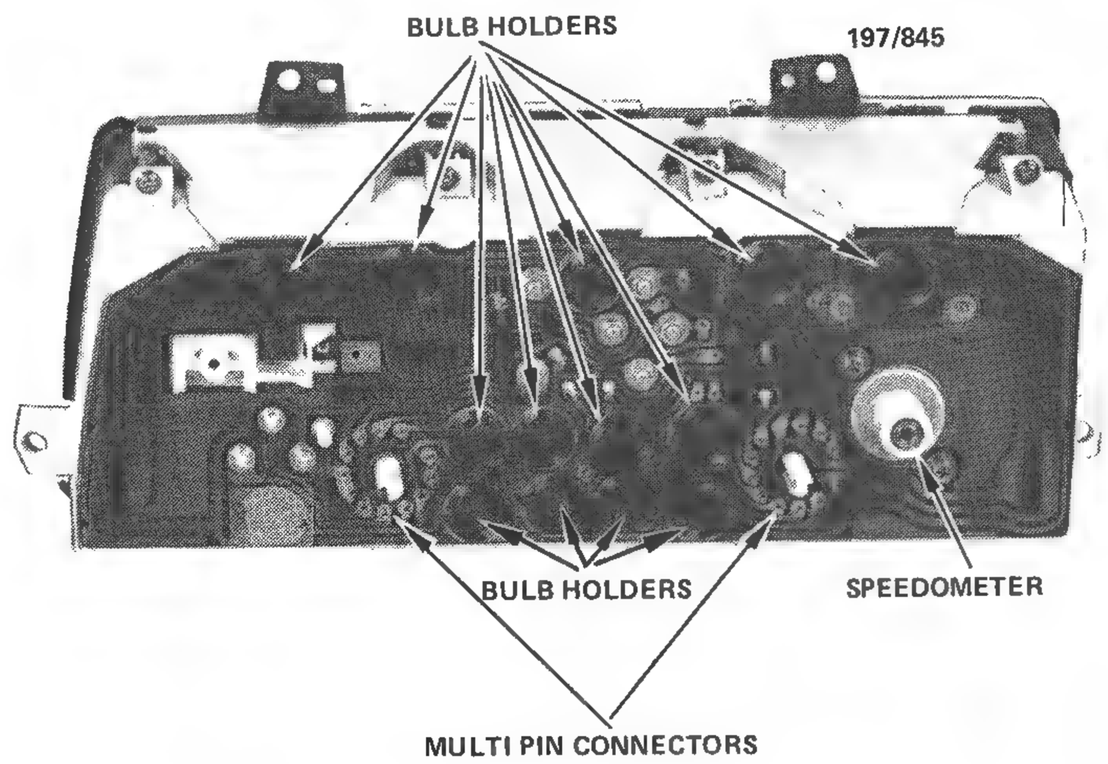

Rear view of instrument cluster showing the illumination and warning lamp bulb holders, multi pin connectors and speedo drive connection.

(8) Remove the four screws attaching the instrument cluster hood.

(9) Remove the instrument cluster hood by placing the fingers of both hands inside the hood. Press down on the hood to unclip the hidden catches under the instrument cluster and at the same time pull towards the operator.

(10) Remove the four screws securing the instrument cluster.

(11) Tilt the instrument cluster forward to release and carefully manoeuvre towards the operator.

(12) Squeeze the locking tab and disconnect the speedometer cable at the speedometer head.

(13) Prise the two multi pin wire connectors off the back of the printed circuit.

NOTE: Pull the centrally located locking tab on the multi pin wire connector to unlock the plug for disconnection.

(14) Remove the instrument cluster from the dash assembly.

Installation is a reversal of the removal procedure.

14. LAMP UNITS

HEADLAMP

To Renew Bulb

(1) Working inside the engine compartment disconnect the wiring connector on the back of the headlamp.

(2) Detach the cover from the back of the headlamp.

(3) Twist the bulb retaining ring in an anti-clockwise direction and remove from the headlamp.

(4) Withdraw the halogen bulb from the headlamp.

Installation is a reversal of the removal procedure ensuring that the bulb contacts are clean and that the bulb is the correct wattage and voltage.

NOTE: Do not touch the halogen bulb with bare fingers. If accidently touched, clean the bulb with alcohol and allow to completely dry before installing.

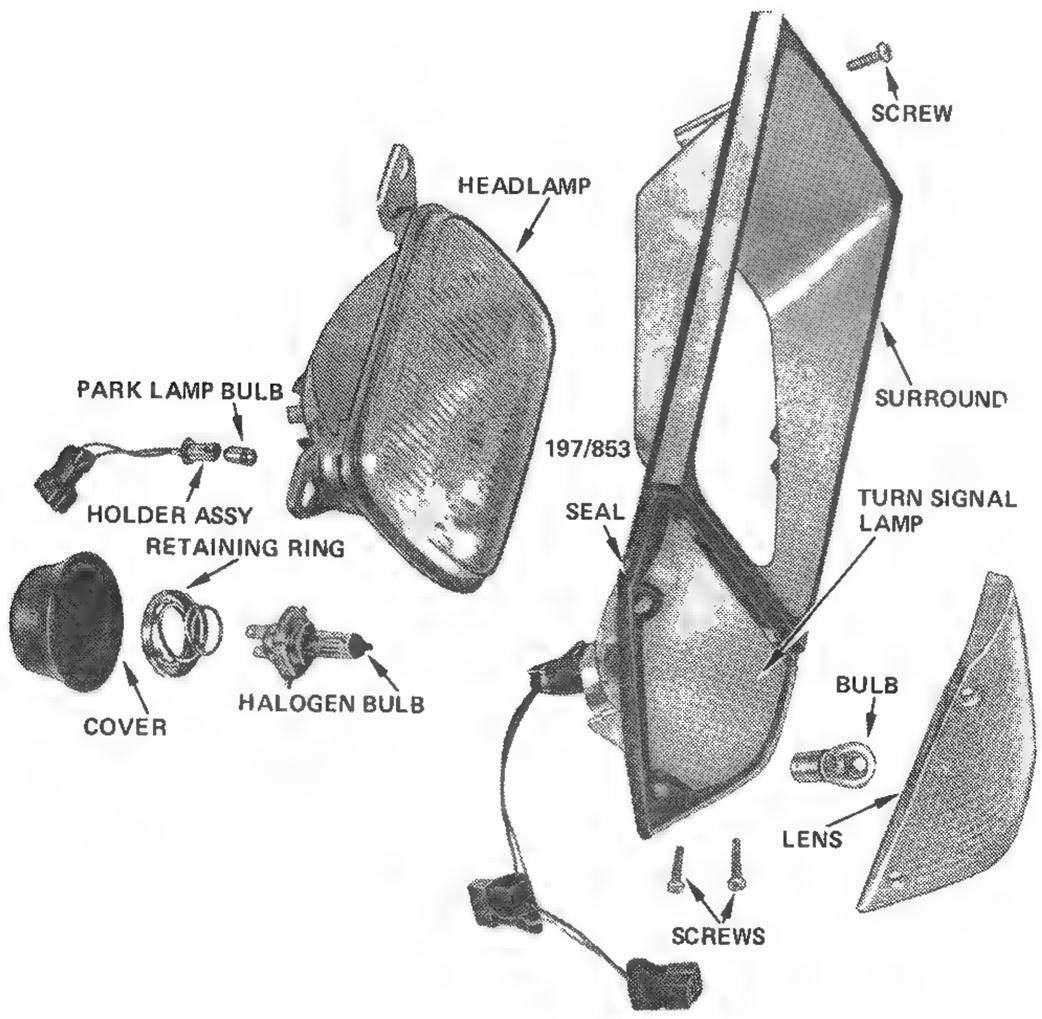

Dismantled view of headlamp, parking lamp and turn signal lamp components.

To Remove and Instal Headlamp Assembly

(1) Remove the six screws attaching the radiator grille, and remove the radiator grille.

(2) Remove two screws attaching the front turn signal lamp lens.

(3) Remove the screw attaching the headlamp surround and move the surround to the side.

(4) Remove the wiring plugs from the back of the headlamp.

(5) Loosen off the headlamp securing screw situated at the top outer edge of the headlamp.

NOTE: The two remaining screws securing the headlamp are vertical and horizontal beam adjustment screws and should not be disturbed if no adjustment is required.

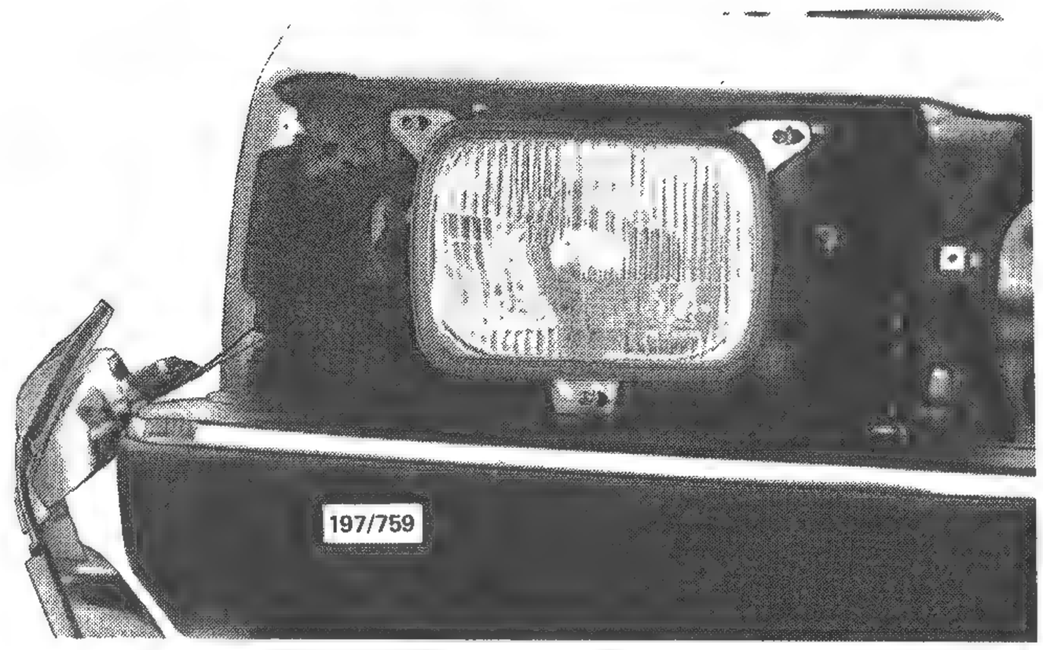

View of headlamp with surround removed.

(6) Push the headlamp in, move to the left and remove the headlamp assembly from the vehicle.

Installation is a reversal of the removal procedure.

To Adjust Headlamps

(1) Ensure that the tyres are inflated to their correct pressures and the vehicle is on level ground.

(2) Position the vehicle in relation to the testing equipment used i.e. headlamp tester or aiming board, paying particular attention to the equipment manufacturer's instructions. When using a headlamp aiming board cover the lamp not being adjusted so that only one beam is projected onto the board.

(3) To raise or lower the headlamp, use the lower adjustment screw.

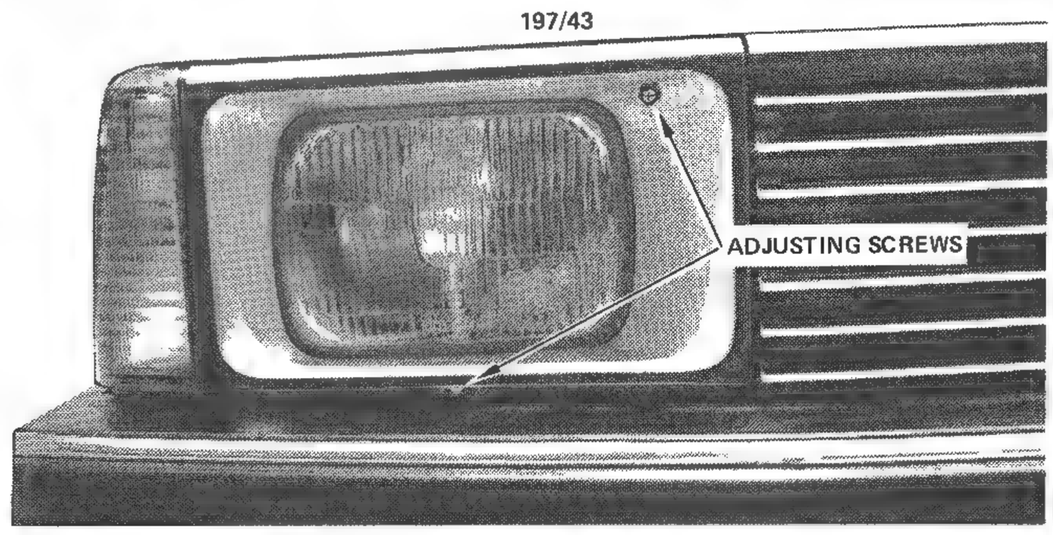

View showing the headlamp adjusting screws.

(4) For left to right adjustment use the screw in the inside top corner of the headlamp surround.

NOTE: Refer to local regulations regarding headlamp aiming specifications.

FRONT PARK LAMP

To Renew Bulb

The park lamp is incorporated in the headlamp assembly.

(1) Working at the front inside the engine compartment, carefully pull the bulb holder out of the back of the headlamp assembly.

(2) Push the bulb inwards and rotate in an anti-clockwise direction for removal.

Installation is a reversal of the removal procedure ensuring that the bulb contacts are clean and that the bulb is the correct wattage and voltage.

FRONT TURN SIGNAL LAMP ASSEMBLY

To Remove and Instal

(1) Remove the screws attaching the radiator grille and remove the grille.

(2) Remove the park lamp lens screws and the headlamp surround attaching screw and remove the headlamp surround.

(3) Disconnect the wiring connector and remove the assembly.

Installation is a reversal of the removal procedure.

To Renew Bulb

(1) Remove the two screws attaching the turn signal lamp lens and remove the lens.

(2) Push the faulty bulb inwards, rotate it anti-clockwise and remove it from the bulb holder.

Installation is a reversal of the removal procedure ensuring that the bulb contacts are clean and the correct wattage and voltage bulb is used.

REAR COMBINATION LAMP

To Remove and Instal

(1) Place the rear luggage compartment lid in the raised position.

(2) Remove the lower rear luggage compartment trim panel.

NOTE: To remove the trim panel attaching studs, pull out the centre of the stud to unlock, then remove the stud.

(3) Partly move out of the way the side trim panel by removing the five screws nearest the rear end of the vehicle.

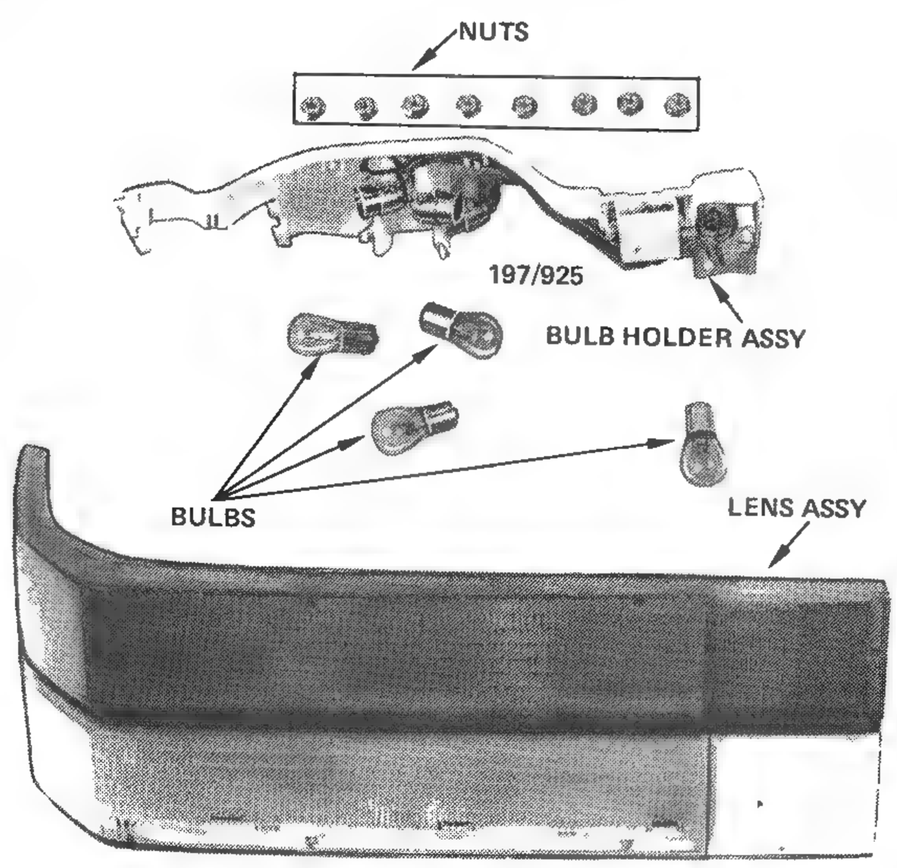

Dismantled view of the rear combination lamp assembly.

(4) Remove the side trim panel.

(5) Remove the now exposed attaching nuts.

(6) Unplug the wiring plugs to the rear lamp assembly.

(7) From the back of the vehicle remove the rear combination lamp assembly.

Installation is a reversal of the removal procedure.

To Renew Bulb

(1) Place the rear luggage compartment lid in the raised position and standing behind the vehicle remove the bulb holder of the combination lamp unit by twisting the locking tab in an anti-clockwise direction.

(2) Remove the bulb holder panel.

(3) Remove the faulty bulb by pushing the bulb inward and simultaneously twisting in an anti-clockwise direction.

Installation is a reversal of the removal procedure.

Ensuring that the bulb contacts are clean and the correct wattage and voltage bulb is used.

LICENSE PLATE LAMP

To Remove and Instal

(1) Remove the four bolts retaining the license plate lamp assembly to the rear bumper bar.

(2) Remove the wiring plug.

(3) Withdraw the license plate lamp assembly.

Installation is a reversal of the removal procedure.

To Renew Bulb

(1) Remove the lens retaining screws.

(2) Push the bulb inwards and twist in an anti-clockwise direction to remove.

Installation is a reversal of the removal procedure.

Ensuring that the bulb contacts are clean and the correct wattage and voltage bulb is used.

INTERIOR LAMP ASSEMBLY

To Renew Bulbs

(1) From the rear of the courtesy lamp assembly prise the lens from the assembly.

(2) Pull out the festoon type bulb for replacement.

(3) For further dismantling of the map bulbs (if

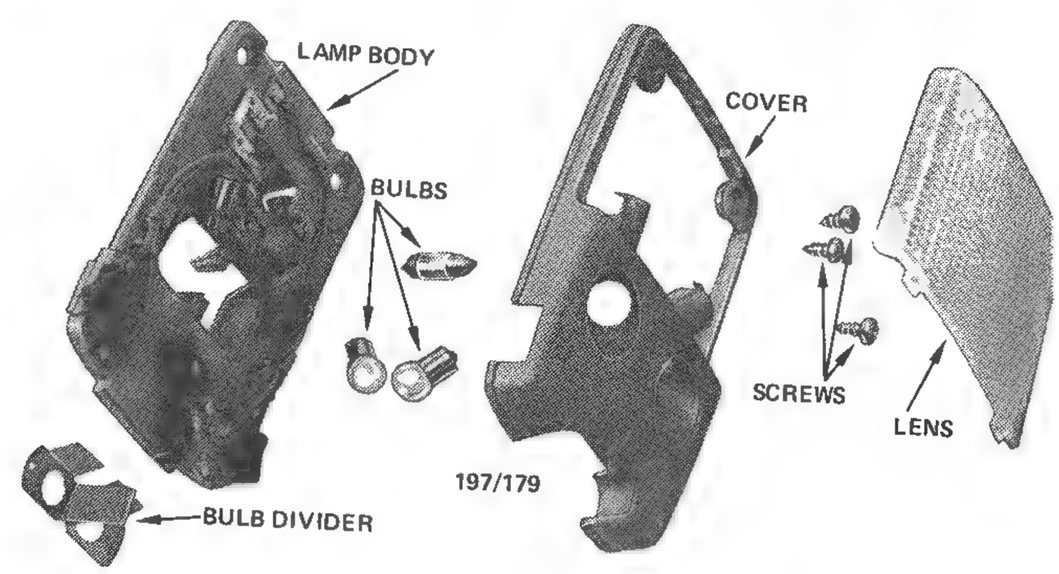

Dismantled view of interior lamp assembly.

equipped) remove the screws retaining the lamp assembly to the roof.

(4) Invert the lamp assembly and remove the bulb divider plate, between the left and right hand map bulbs.

(5) Push the bulb inwards and twist in an anti-clockwise direction to remove.

Installation is a reversal of the removal procedure ensuring that the bulb contacts are clean and that the bulb is the correct wattage and voltage.

LUGGAGE COMPARTMENT LAMP ASSEMBLY

To Remove and Instal

(1) Place the luggage compartment door in the raised position.

(2) With a suitable screwdriver carefully prise off the lens.

(3) Squeeze the two metal locking tabs towards the centre of the lamp assembly.

(4) Withdraw the unit and disconnect the wire connector.

Installation is a reversal of the removal procedure.

To Renew Bulb

(1) With the luggage compartment door in the raised position, prise the lens off the lamp assembly.

(2) Spread the bulb contact slightly apart and remove the festoon type bulb.

(3) Before renewing the bulb ensure that the lamp contacts are clean and free of corrosion.

Installation is a reversal of the removal procedure.

15. WINDSCREEN WIPER

WIPER MOTOR

To Remove and Instal

(1) Disconnect the negative battery terminal.

(2) Remove the screws attaching the service hole cover to the plenum chamber in the bulkhead and remove the cover.

(3) Disconnect the wiring connector to the wiper motor.

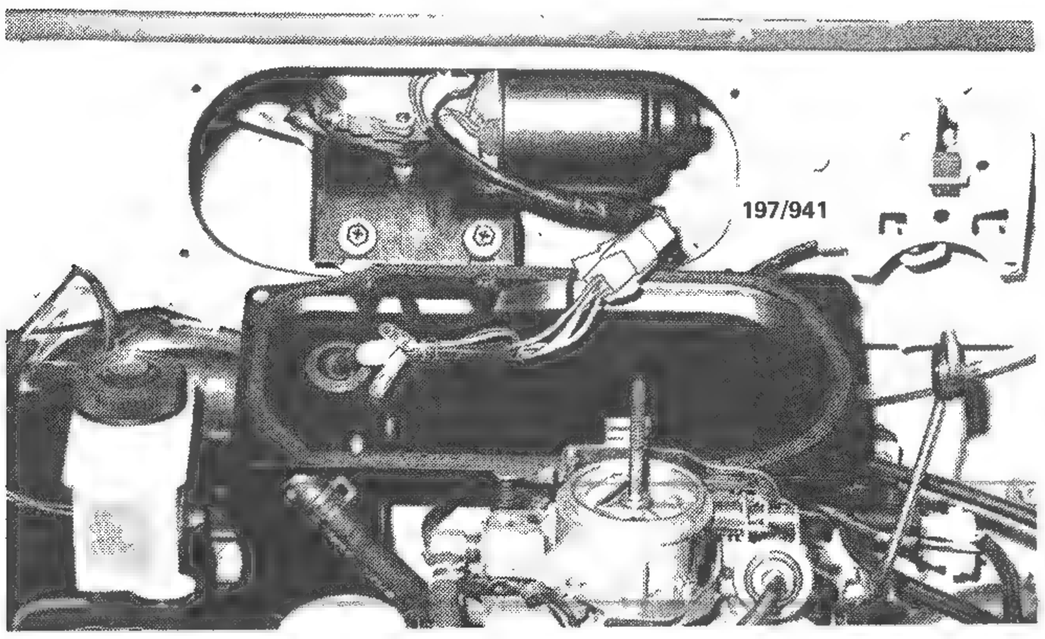

View of wiper motor installed on vehicle with service hole cover removed.

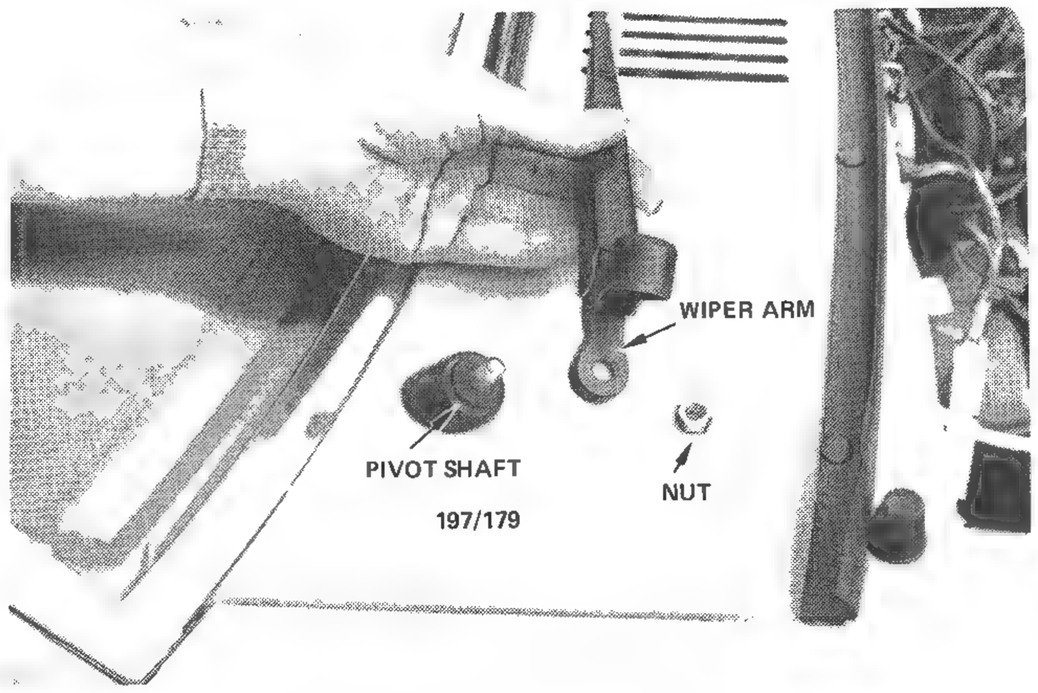

Removing front wiper arm from pivot shaft.

(4) Remove the bolts attaching the wiper motor to the body.

(5) Separate the wiper motor from the linkage by inserting a wide bladed screwdriver.

(6) Twist the screwdriver to snap the linkage apart, and remove the wiper motor.

Installation is a reversal of the removal procedure.

WIPER ARMS

To Remove and Instal

(1) Remove the plastic cover from the pivot post.

(2) Remove the nut attaching the arm of the pivot post.

(3) Lever the wiper arm from the pivot post.

Installation is a reversal of the removal procedure. Ensure that the wiper arms are installed so that the wiper blades sweep to 20 mm of the windscreen lower moulding.

WIPER LINKAGE

To Remove and Instal

(1) Remove the wiper motor assembly as previously described.

(2) Remove the nuts securing the wiper arms to the wiper pivots and remove the wiper arms as described under the Wiper Arms heading.

(3) Remove the wiper arm pivot retaining nuts and mounting grommets. Lower the pivots into the plenum chamber and remove the linkage assembly through the service hole.

Installation is a reversal of the removal procedure.

WIPER BLADE AND RUBBER

To Remove and Instal

(1) Pull the wiper arm assembly away from the windscreen until it locks into the vertical position.

(2) Push in the spring loaded clip at the end of the wiper arm to slide the wiper blade assembly away from the wiper arm.

(3) Detach the rubber carrier retaining clip from the end of the wiper blade by squeezing the ends of the clip together.

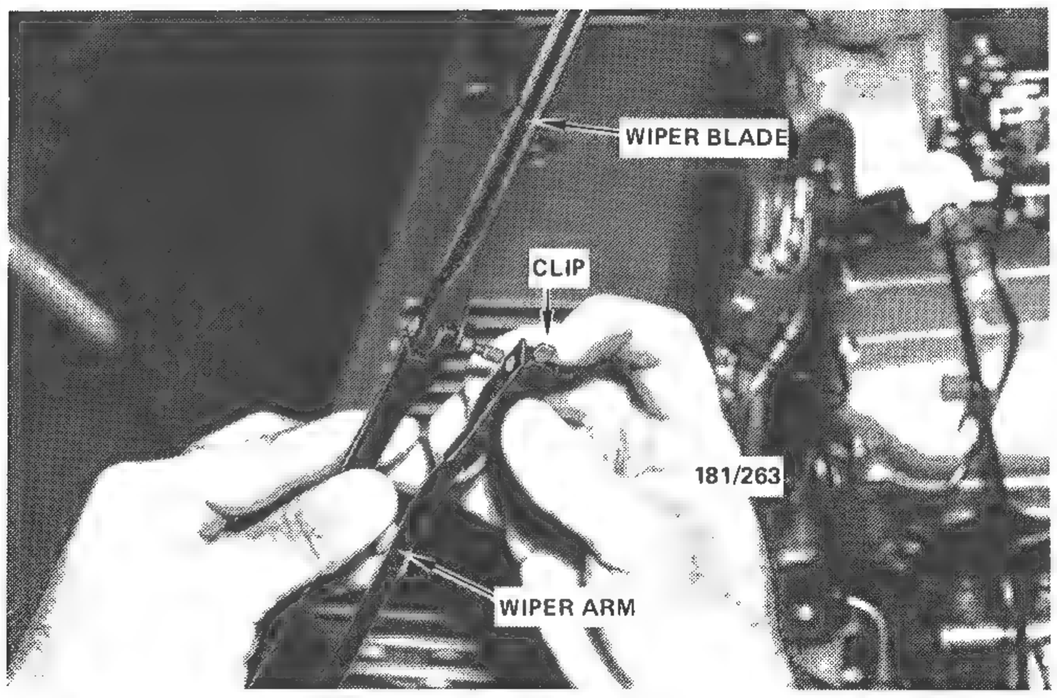

Removing wiper blade from wiper arm. Typical.

(4) Slide the carrier and wiper rubber out of the wiper blade.

(5) Detach the clip from the carrier and slide the wiper rubber from the carrier.

Installation is a reversal of the removal procedure with attention to the following points:

(1) Ensure that the new rubber has been cut to its correct length and is of the same type as the original.

(2) Ensure that all the locking clips are fitted correctly to prevent the carrier and/or rubber from sliding out.

16. REAR WINDOW WIPER

WIPER ARM AND BLADE

To Remove and Instal

The removal and installation procedure of the rear wiper arm and blade is similar to that as described for the windscreen wiper arms and blades.

WIPER MOTOR

To Remove and Instal

(1) Disconnect the battery negative lead.

(2) Remove the wiper arm and blade assembly.

(3) Where fitted remove the luggage compartment lamp.

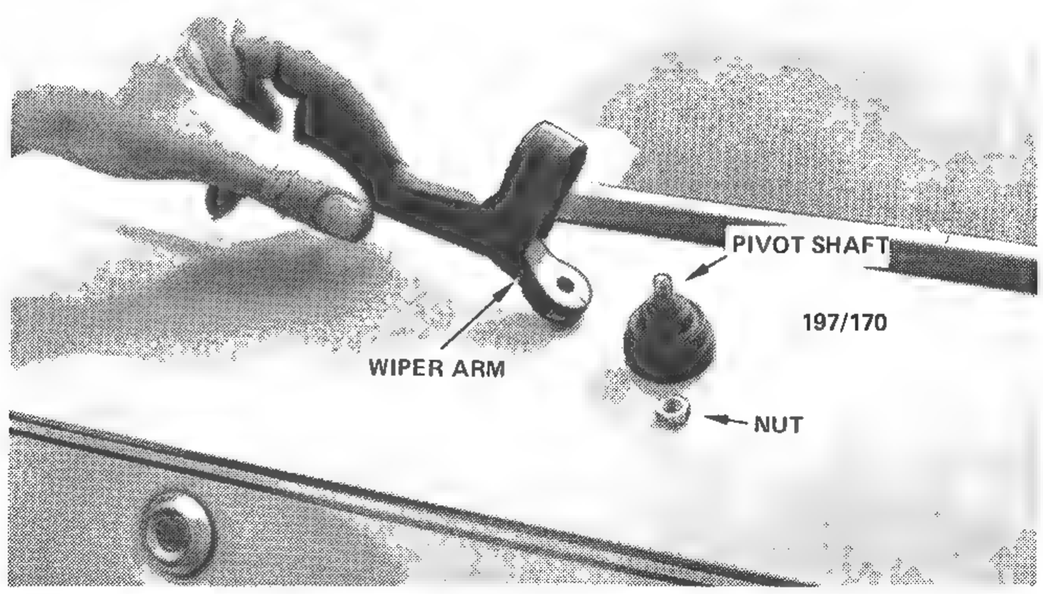

Removing rear wiper arm from pivot shaft.

(4) Remove the door lower trim panel.

(5) Disconnect the wiring connector and the hose for the rear washer.

(6) Where equipped disconnect the rear defroster wire at the connector.

(7) Remove the screws retaining the wiper motor to the rear door and remove the wiper motor from the vehicle.

Installation is a reversal of the removal procedure.

17. FUSES AND FUSIBLE LINKS

TO CHECK AND RENEW FUSE

NOTE: If a fuse is found to be faulty or burned out use a replacement fuse of the specified amperage only. The use of a higher rated fuse than specified could cause damage to the vehicle wiring harness.

(1) Remove the cover from the fuse box and locate the fuse protecting the circuit at fault.

(2) Pull the fuse out of its socket and visually inspect it for serviceability. Replace if faulty.

(3) If the circuit is still faulty refer the problem to an automotive electrician.

Fuse panel with cover removed.

TO CHECK AND RENEW FUSIBLE LINK

NOTE: If a fusible link is found to be faulty or burned out use a replacement fusible link of the specified color only. The use of a higher amperage fusible link could cause damage to the vehicle wiring harness.

(1) Disconnect the negative battery terminal.

(2) Disconnect the applicable fusible link from the mounting block.

(3) Check the fusible link visually for any signs of it being burnt out.

(4) Should the fusible link appear to be in serviceable condition, test its continuity using an ohmmeter or a suitable battery operated test lamp.

(5) If the fusible link proves to be faulty fit a new fusible link.

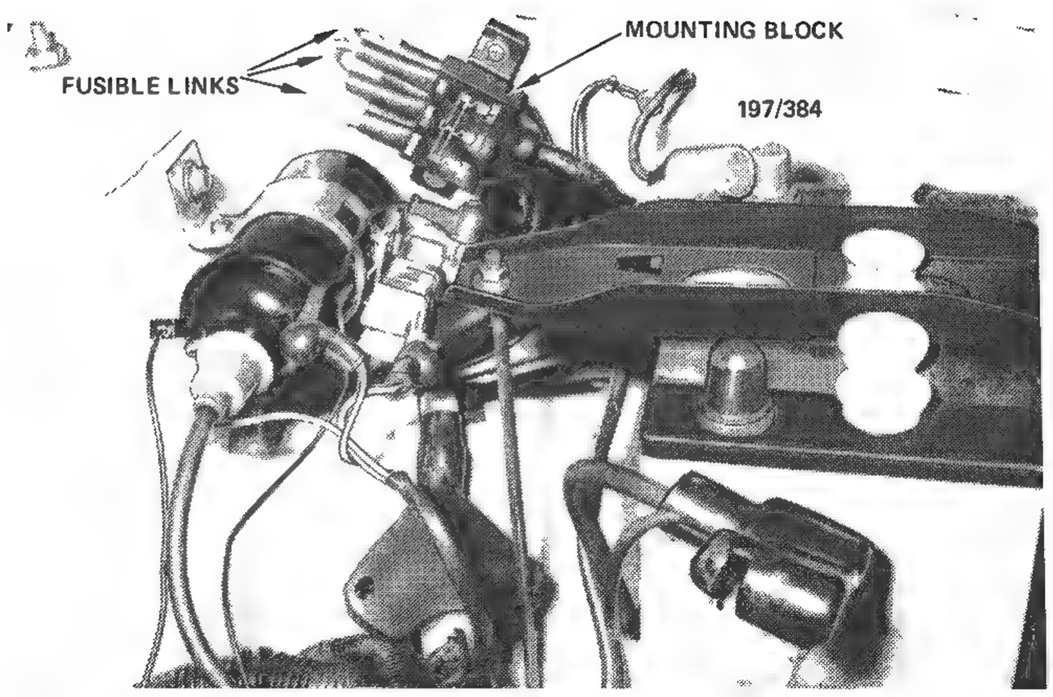

Installed view of fusible links.

NOTE: While checking the operation of a new fusible link, loosely connect the battery terminal only, to safeguard against damage to the wiring harness.

(6) If the circuit is still inoperative or the fusible link burns out again refer the problem to a compotent automotive electrician.

18. HOW TO WIRE UP A TRAILER

There are many different brands of trailer electrical combination plugs and sockets on the market. Some makes can even be obtained with a varying number of circuit pin connections. Most manufacturers, however, now choose to market the seven pin variety only. The seven pin plug and socket provides for two auxiliary circuits and in caravan use these are usually used for the 12 volt interior lights and the electric brakes.

If the trailer which is to be towed by the vehicle already has a connector plug then the matching type of socket will have to be fitted to the vehicle. If on the other hand, the trailer has no plug then it is advisable to fit a seven pin type unit to the vehicle and trailer so that if at a later time auxiliary circuits are needed, it is only a matter of using the vacant pins.

FITTING THE SOCKET AND PLUG

NOTE: The minimum amount of material needed will be:

Trailer socket and plug, socket mounting bracket kit, multi core flex, wiring connectors, grommet, heave duty flasher can with repeater lamp.

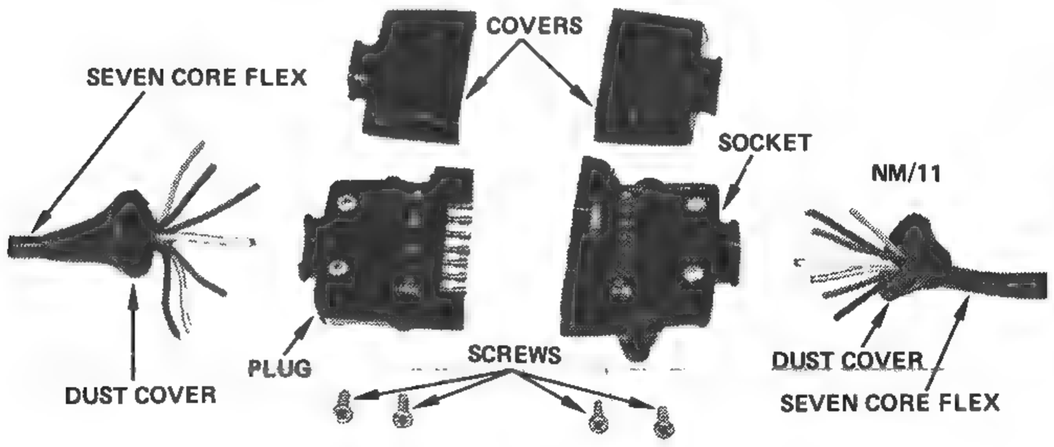

The brylite seven pin trailer plug and socket.

(1) Disconnect the earth lead from the battery.

(2) Locate the main wiring harness at the rear of the vehicle and using the length of multi core flex, cut if necessary and tap into the right hand flasher wire, left hand flasher wire, tail lamp wire, stop lamp wire and an earth wire. Use insulated connectors when tapping into the wires.

NOTE: To determine which color wire on the vehicle is for each particular rear lamp refer to the wiring diagram in this section which shows the colors for the various wires. Ensure that the right diagram for the applicable model is used. When tapping into the rear wires on the vehicle conform to the standard caravan color coding by mating the correct color wire of the multi core flex to its applicable lamp or earth wire on the vehicle. The standard caravan coding is as follows:

Left flasher ..... Yellow
Right flasher ..... Green
Stop lamp ..... Red
Tail lamp ..... Brown
Earth ..... White
Auxiliary ..... Blue
Auxiliary spare ..... Black

This color coding has nothing to do with the wiring on the vehicle. It is only for the caravan or trailer wiring.

(3) Drill a suitable sized hole through the vehicle floor, fit a rubber grommet and push through the multi core flex.

NOTE: Before drilling a hole through the floor check to see if there is an existing hole which will take the multi core flex. It may be convenient to use the number plate lamp wire hole. Whichever hole is used ensure that a rubber grommet is fitted to prevent the wires from chafing.

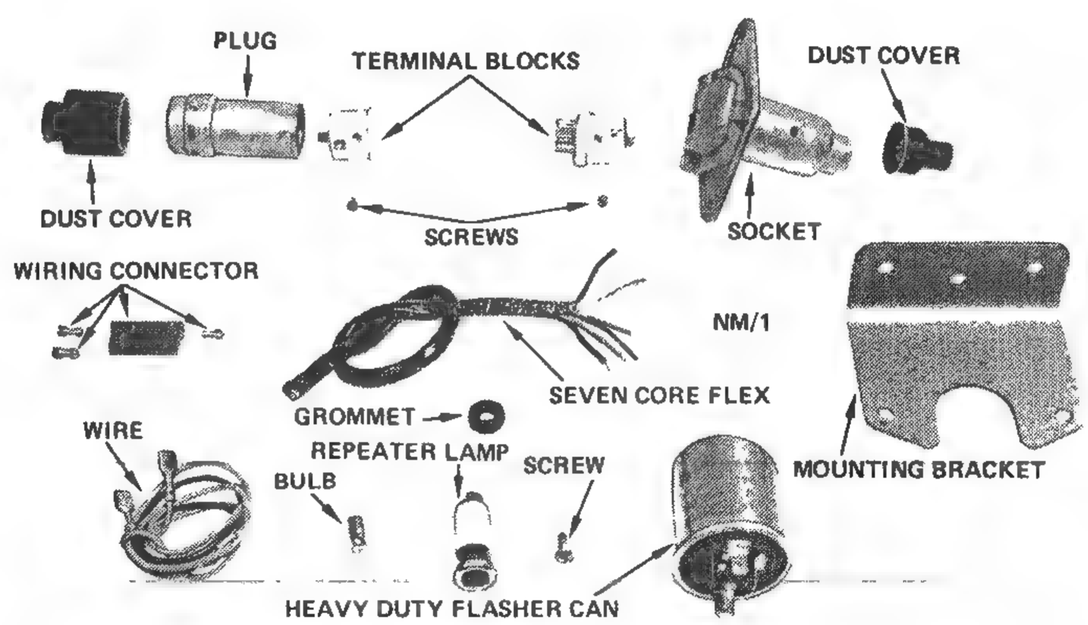

Minimum material required to wire up a trailer. Utilux trailer socket and plug shown.

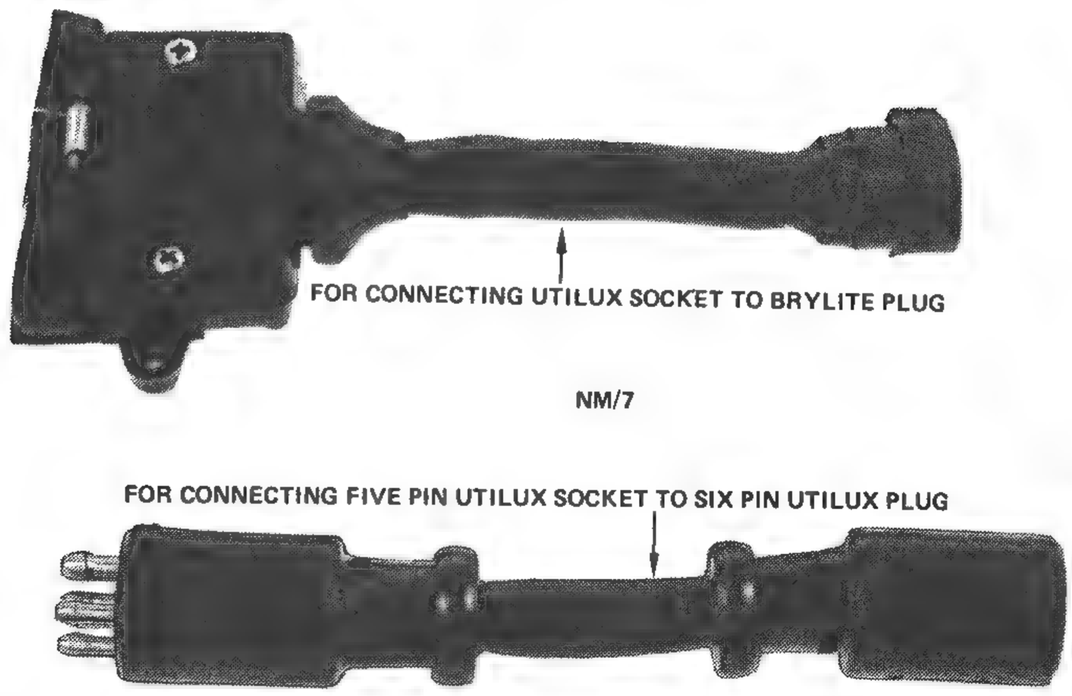

Useful connectors which can be used if the trailer to be towed is fitted with a different type plug to the towing vehicle socket.

(4) Cut the multi core flex to length and slide the socket dust cover onto the flex. Strip about 15 mm of covering from each wire and connect the wires to the terminals of the socket. Ensure that each colored wire is connected to its correct terminal. On the brands of sockets where the terminals are only numbered it will be necessary to refer to the instruction sheet which comes with the unit to find out the correct circuit connection for each pin number.

(5) After wiring up and reassembling the socket mount the socket to the rear of the vehicle. Try to mount the socket as near as possible to the tow bar ball and high enough to prevent damage to the socket if the rear of the vehicle happens to scrape on driveways, etc. On brands of socket that do not have an inbuilt mounting bracket it will be necessary to make up a mounting bracket or use the optional mounting bracket for that particular socket.

(6) Using the same wiring up procedure, wire the plug to the trailer wiring. If the wiring on the trailer is not to the standard color code and is an unknown quantity then it will be necessary to check out and connect up the wiring as follows:

(a) Locate the earth wire for the trailer even if all wires have to be traced on the trailer. Connect the earth wire only to the wiring plug and connect the plug to the connector on the vehicle.

(b) Connect up the vehicle's battery and switch on the tail lamps. Connect each trailer wire in turn to the live tail lamp terminal on the plug until the trailer tail lamp illuminates. When the trailer tail lamp wire is found connect this to the tail lamp terminal on the plug. Switch off the tail lamps and using the same procedure turn the other

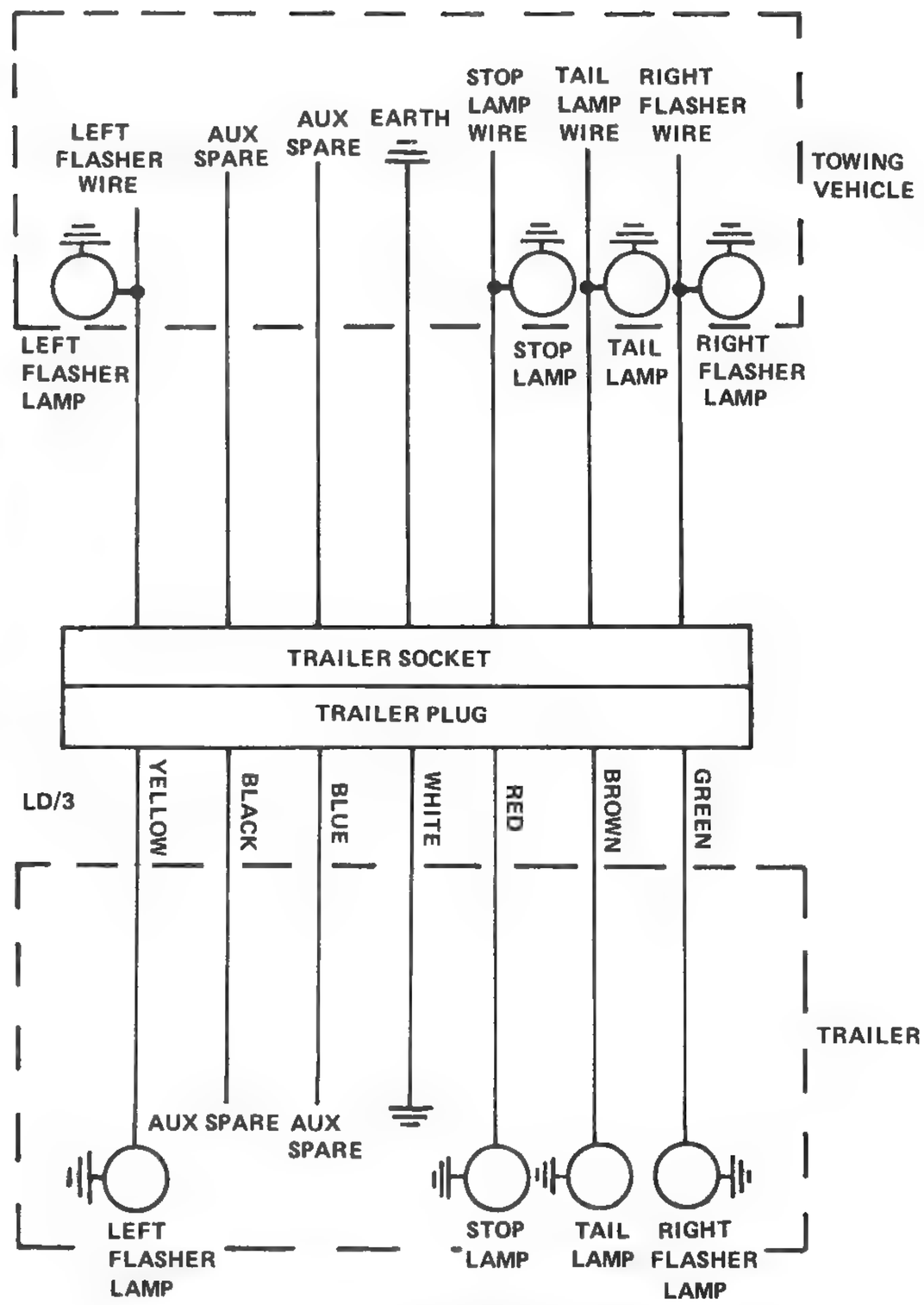

Typical diagram for wiring up a trailer.

lamps on in turn and find the applicable trailer lamp by connecting to the live terminal on the plug.

NOTE: On some makes of plugs it will be necessary to dismantle the terminal blocks from the plug and/or socket in order to expose the terminals.

(7) Instal the heavy duty flasher can and repeater lamp to the vehicle following the wiring up instructions which are enclosed in the flasher can and repeater lamp kit. Ensure that the correct kit is purchased for the applicable model of the vehicle.

The heavy duty flasher can keeps the flash rate constant regardless of additional load. The repeater lamp, which should be mounted in some easy to see position on the dash panel, indicates whether the trailer turn signal lamps are operating.

Wiring diagram for all models

COLOR CODE

The first letter of the code represents the main wire color, the other letters represent the trace colors and where a sleeve is installed on the wire the color of the sleeve is indicated by the letters enclosed in brackets.

B – BLACK
L – BLUE
G – GREEN
R – RED
Y – YELLOW
W – WHITE
N – BROWN
O – ORANGE
K – PINK
S – GREY
V – VIOLET
P – PURPLE
X – LIGHT GREEN
Z – LIGHT BLUE
M – DARK GREEN
T – DARK BLUE
A – LIGHT BROWN

KEY

1. Alternator generator.
2. Check relay.
3. Horn relay.
4. Water temperature sensor.
5. Instrument wiper relay.
6. Fender hazard lamp.
7. R.H. turn signal lamp.
8. R.H. park lamp.
9. R.H. headlamp.
10. Horn.
11. Horn.
12. L.H. headlamp.
13. L.H. park lamp.
14. L.H. turn signal lamp.
15. Fender hazard lamp.
16. Panel illumination control lamp.
17. Automatic transmission select illumination lamp.
18. Heater control illumination lamp.
19. Instrument panel illumination lamp.
20. Cigarette lighter.
21. Clock (digital).
22. Front screen washer motor.
23. Front screen wiper motor.
24. Condensor.
25. Condensor.
26. Map reading lamp unit.
27. Reverse lamp switch. (Neutral safety switch Auto models).
28. Starter motor.
29. Battery.
30. Fusible links.
31. Ballast resistor.
32. Inline fuse.
33. Condensor.
34. Coil.
35. Distributor.
36. Capacitor.
37. Engine speed unit. (Emission control).
38. 3 Way valve. (Emission control).
39. Fuel cut solenoid. (Emission control).
40. Kickdown switch. (Automatic models).
41. Kickdown solenoid. (Automatic models).
42. Cooling fan relay.
43. Fan thermo switch.
44. Cooling fan motor.
45. Choke switch.
46. Stop lamp switch.
47. Stop lamp check.
48. Fuse box.
49. Brake master cylinder fluid level sensor.
50. Inline fuse.
51. Oil pressure switch.
52. Handbrake warning switch.
53. Handbrake warning checker.
54. R.H. rear door courtesy lamp switch.
55. Courtesy lamp.
56. R.H. front door courtesy lamp switch.
57. L.H. front door courtesy lamp switch.
58. L.H. rear door courtesy lamp switch.
59. Ignition switch.
60. Headlamp switch.
61. Horn button.
62. Turn signal and hazard switch.
63. Flasher unit.
64. Front wiper and washer switch.
65. Inline fuse.
66. Inline fuse.
67. Rear wiper and washer switch.
68. Demister switch.
69. Demister indicator lamp.
70. No. 1 Air conditioner relay.
71. No. 2 Air conditioner relay.
72. No. 3 Air conditioner relay.
73. Air conditioner switch.
74. Blower motor switch.
75. Resistors.
76. Blower motor.
77. Thermo switch.
78. Frost switch.
79. Air conditioner solenoid valve.
80. Magnetic clutch.
81. L.H. front speaker.
82. L.H. rear speaker.
83. Radio.
84. Stereo.
85. R.H. rear speaker.
86. R.H. front speaker.
87. Luggage compartment lamp.
88. Luggage compartment switch.
89. Rear compartment lamp and switch.
90. Rear wiper motor.
91. Rear washer motor.
92. Connector.
93. Fuel tank sender unit.
94. Demister.
95. R.H. turn signal lamp.
96. Park lamp.
97. R.H. Stop lamp.
98. Reverse lamp.
99. Licence plate lamp.
100. Licence plate lamp.
101. Reverse lamp.
102. L.H. stop lamp.
103. Park lamp.
104. L.H. turn signal lamp.
105. L.H. turn signal indicator.
106. High beam indicator.
107. Choke indicator.
108. Tacho.
109. Water temperature gauge.
110. Fuel gauge.
111. Voltage stabiliser.
112. Oil pressure lamp.
113. Handbrake warning lamp.
114. Master cylinder warning lamp.
115. Charge lamp.
116. Stop lamp indicator lamp.
117. R.H. turn signal indicator.
118. Diode.
119. Instrument panel connector.

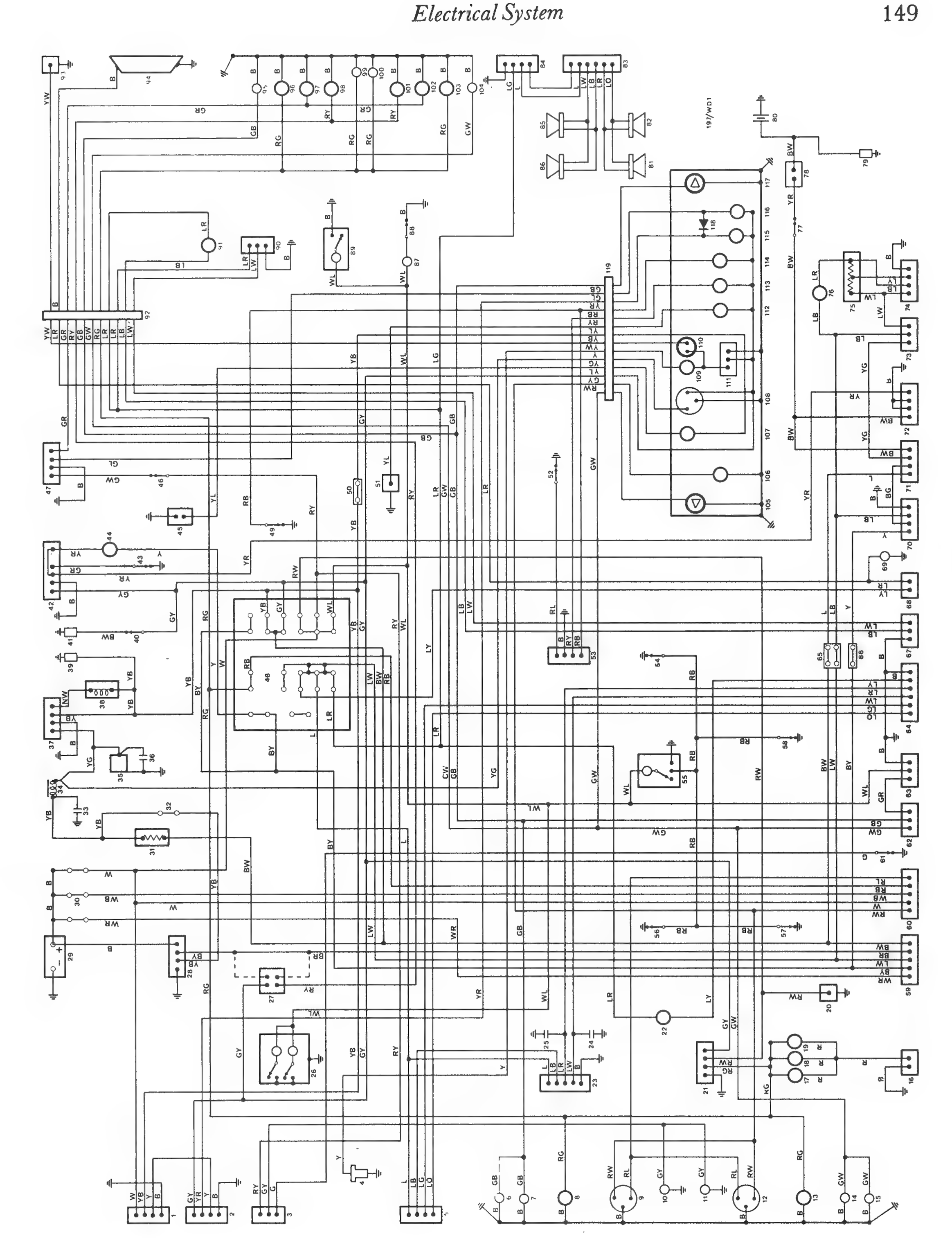

Wiring diagram for all models

Refer to supplement for more information

BODY

1. WINDSCREEN AND REAR GLASS

The renewal or replacement of the windscreen and the rear glass follows the same basic procedure.

The successful fitting and sealing of the windscreen or rear glass will depend to a large extent on the technical knowledge and experience of the operator and it is not recommended that rear glass or windscreen replacement be attempted by anyone lacking in previous experience.

2. FRONT DOORS

INTERIOR HANDLES AND TRIM PANEL

To Remove and Instal

(1) Wind the door glass to the closed position.

(2) If applicable, use a small screwdriver to prise the plugs from the arm rest. Remove the screws retaining the arm rest to the door and remove the arm rest. If applicable collect the spacer from the front aperture in the trim panel.

(3) Remove the screw retaining the remote control lever assembly to the door.

(4) Lever back the regulator handle escutcheon and using a suitable wire hook withdraw the handle retaining clip, then remove the handle and the escutcheon.

(5) Using a broad bladed screwdriver carefully lever the trim panel outwards and disengage all the retaining clips. When all the clips have been disengaged, manoeuvre the remote control lever assembly through the trim panel and lift the trim panel from the door.

(6) Carefully remove the plastic sealing sheet from the door inner panel.

Installation is a reversal of the removal procedure with attention to the following points:

(1) Ensure that the plastic sealing sheet is correctly installed and not torn or damaged.

(2) Check the trim panel retaining clips and renew any damaged clips as necessary.

(3) If applicable, instal the spacer in the trim panel prior to installing the arm rest.

(4) Wind the door glass to the closed position and instal the regulator handle to correspond with the regulator handle on the opposite door.

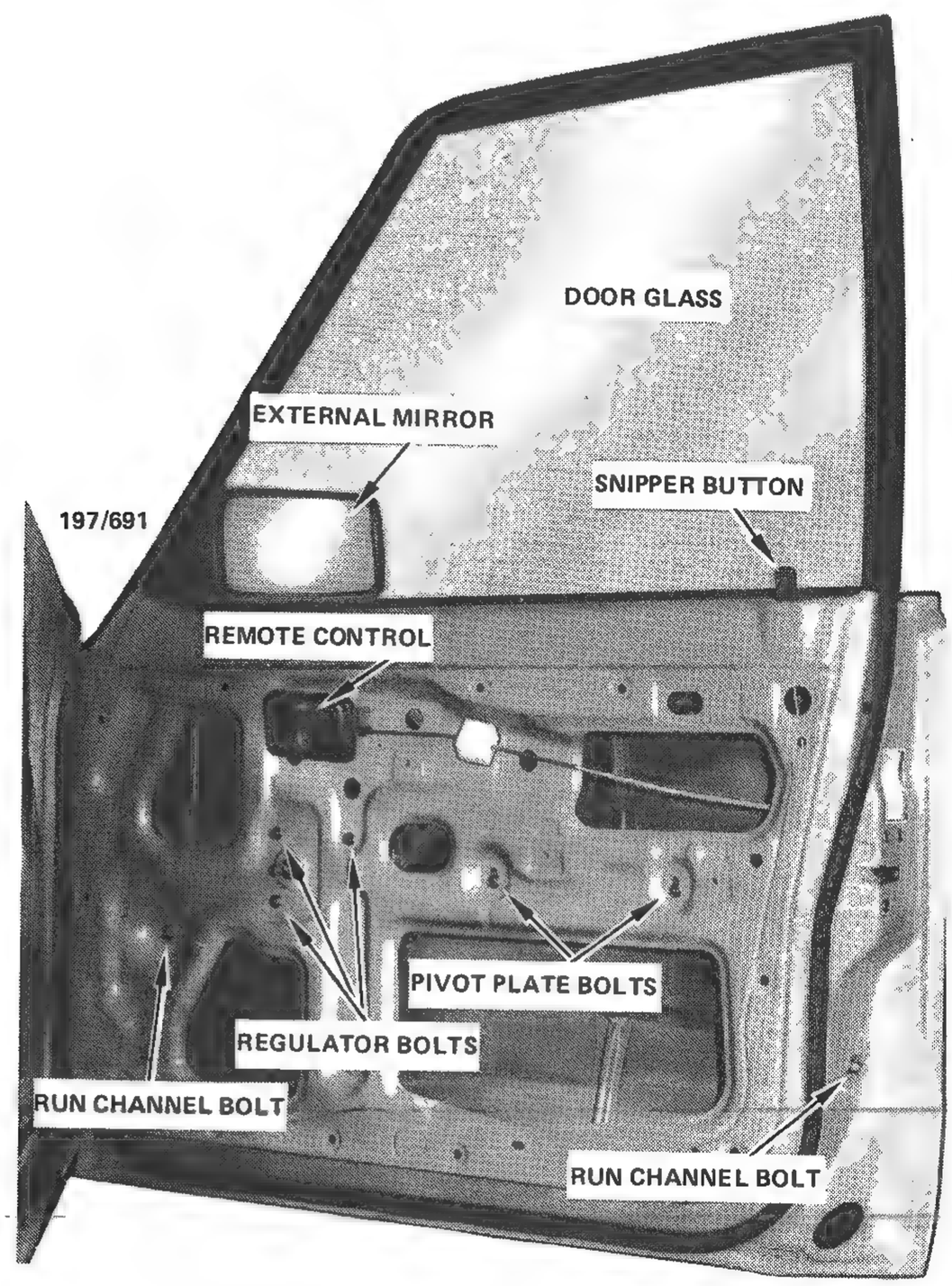

Front door with trim panel removed.

DOOR GLASS AND REGULATOR

To Remove and Instal

(1) Remove the interior handles, the trim panel and the plastic sealing sheet as previously described and lower the door glass fully.

(2) Carefully prise the inner and outer weatherstrips from the door glass opening. Take care not to damage the paintwork.

(3) Raise the door glass to align the lift channel with the lower work aperture.

(4) Support the door glass and remove the two screws connecting the lift channel to the door glass.

(5) Tilt the door glass to disengage it from the run channels, then lift the door glass out through the door glass opening.

NOTE: If necessary, the run channel rubber and the front channel can now be easily removed.

(6) Remove the five bolts retaining the regulator and pivot plate assembly to the door inner panel. The

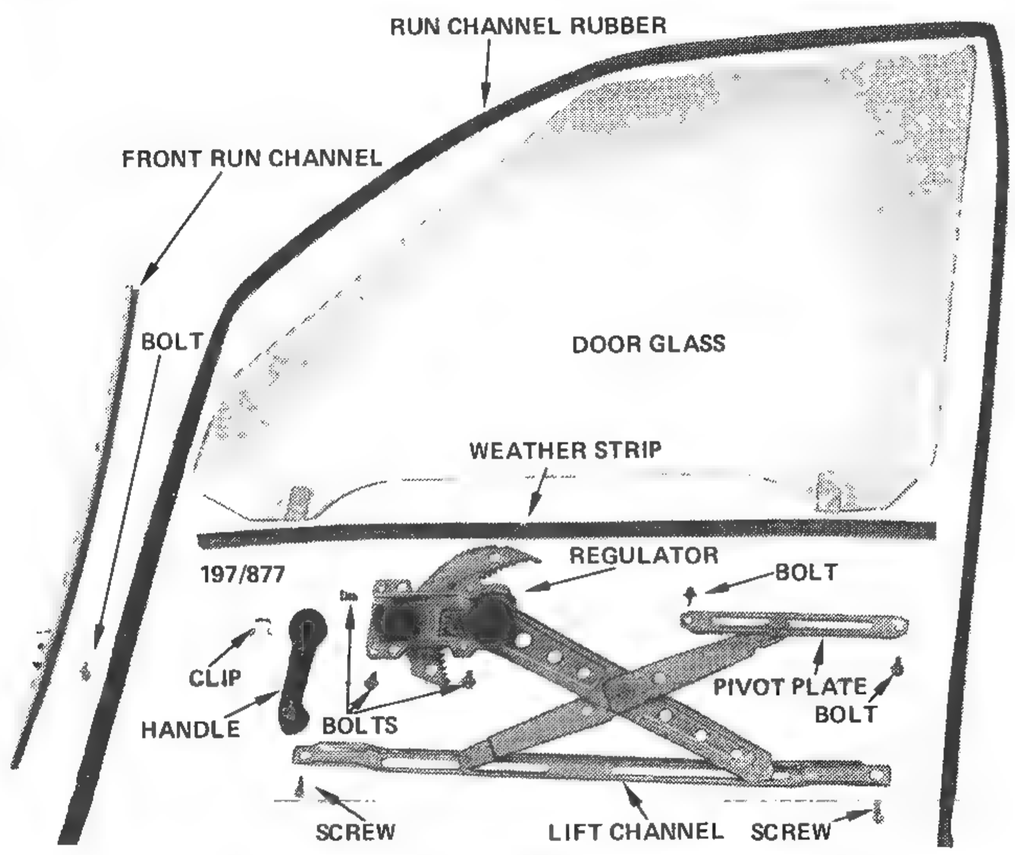

Front door glass and regulator components.

regulator and pivot plate assembly can now be removed from the door through the lower work aperture.

Installation is a reversal of the removal procedure with attention to the following points:

(1) Ensure that the regulator and pivot plate sliding surfaces are adequately lubricated with a zinc oxide grease.

(2) Loosely instal the regulator and pivot plate assembly to the door inner panel.

(3) Instal the door glass into the door through the door glass opening, engage the door glass in the run channels and loosely instal the two retaining screws.

(4) Tighten the three regulator retaining bolts and operate the door glass a few times up and down to centralize the door glass. Tighten the two lift channel screws and the two pivot plate bolts.

(5) Operate the door glass ensuring that the operation is smooth prior to installing the trim panel.

(6) Instal the plastic sealing sheet, the trim panel and interior handles as previously described.

REMOTE CONTROL AND DOOR LOCK

To Remove and Instal

(1) Remove the interior handles, the trim panel and the plastic sealing sheet as previously described.

(2) Remove the three screws retaining the door lock to the door frame.

(3) Disconnect the operating links from the exterior door handle and the door lock cylinder.

(4) To aid removal and installation of the door lock remove the bolt securing the rear lower run channel to the door frame.

(5) Manoeuvre the remote control, the door lock and the snipper button from the door without disturbing the adjustment of the exterior handle operating link pivot.

Installation is a reversal of the removal procedure with attention to the following points:

(1) Ensure that the snipper button is inserted through its aperture in the door inner panel prior to installing the door lock screws.

(2) Ensure that the exterior handle operating link pivot is returned to its original position and that there is a small amount of free play at the exterior handle.

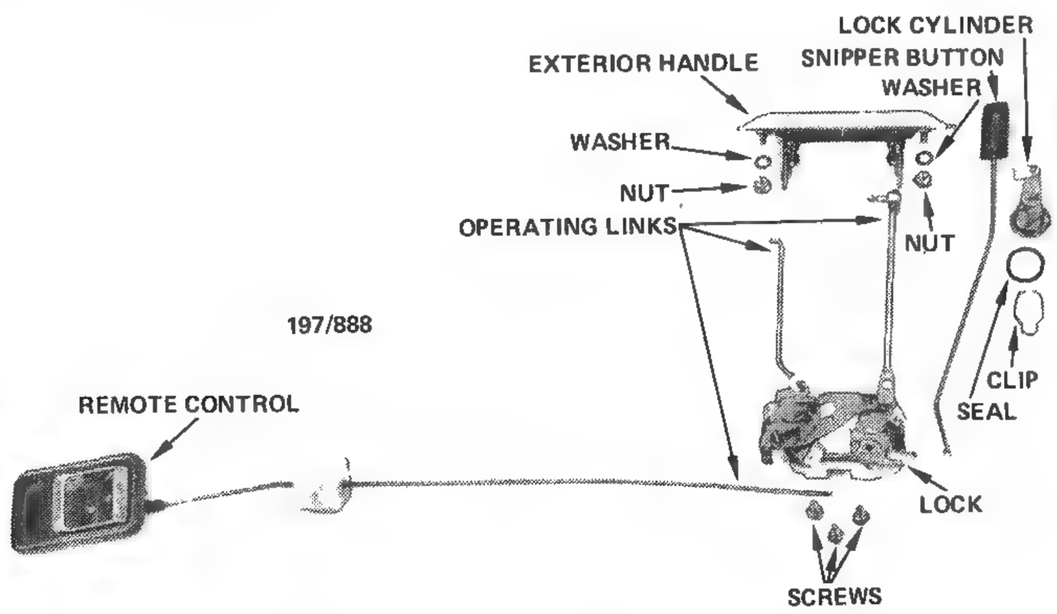

Front door lock and remote control components.

(3) Check the operation of the door lock prior to installing the plastic sealing sheet, the trim panel and the interior handles as previously described.

EXTERIOR DOOR HANDLE

To Remove and Instal

(1) Remove the interior handles, the trim panel and the plastic sealing sheet as previously described.

(2) Disconnect the operating link from the exterior door handle, without disturbing the position of the exterior handle operating link pivot.

(3) Remove the two nuts retaining the exterior door handle to the door and withdraw the exterior door handle.

Installation is a reversal of the removal procedure with attention to the following points:

(1) Ensure that the exterior door handle seal is in a serviceable condition and correctly installed to prevent the entry of dust and water.

(2) Ensure that the exterior door handle operating link pivot is returned to its original position and that there is a small amount of free play at the exterior door handle.

(3) Check the operation of the door lock prior to installing the plastic sealing sheet, the trim panel and the interior handles as previously described.

LOCK CYLINDER

To Remove and Instal

(1) Remove the interior handles, the trim panel and the plastic sealing sheet as previously described.

(2) Disconnect the operating link between the door lock and the lock cylinder.

(3) Using a suitable screwdriver, remove the lock cylinder retaining clip and withdraw the lock cylinder from the door outer panel.

Installation is a reversal of the removal procedure.

LOCK STRIKER PLATE

To Remove, Instal and Adjust

(1) Mark the position of the striker plate on the door pillar with a soft lead pencil to facilitate correct replacement of the striker plate.

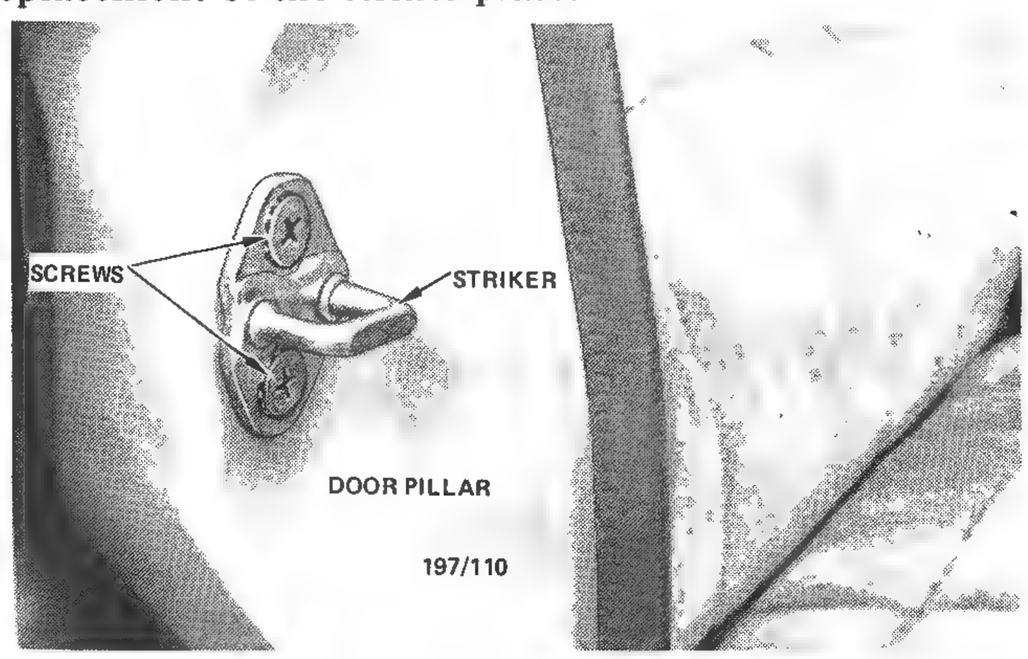

Installed view of front door lock striker plate.

(2) Remove the two screws retaining the striker plate to the door pillar and remove the striker plate. Inspect the striker plate for wear and renew as necessary.

(3) Instal the striker plate to the door pillar according to the pencil marks made on removal.

(4) Close the door and observe the alignment with the body panel or rear door. If necessary loosen the striker plate retaining screws and move the striker plate in or out to achieve a flush fit.

(5) If the door lifts or drops when the lock engages the striker plate, loosen the screws and move the striker plate up or down to eliminate the lift or drop.

NOTE: After each adjustment tighten the striker plate screws and check the adjustment. Readjust as necessary.

EXTERNAL MIRROR

To Remove and Instal

(1) From the inside of the door, remove the three screws retaining the external mirror to the door.

(2) Withdraw the external mirror, small trim panel and the seal from the door.

Installation is a reversal of the removal procedure ensuring that the seals are in good condition and correctly installed to prevent the entry of dust and water.

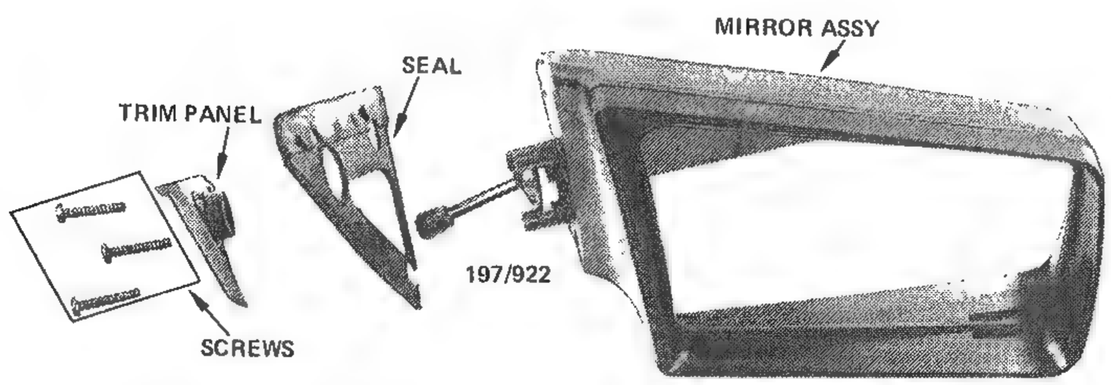

Dismantled view of external mirror components.

3. REAR DOORS

INTERIOR HANDLES AND TRIM PANEL

To Remove and Instal

(1) Wind the door glass to the closed position.

(2) Remove the screws retaining the arm rest to the door and remove the arm rest.

(3) Remove the screw retaining the remote control lever assembly to the door.

(4) Lever back the regulator handle escutcheon and using a suitable wire hook withdraw the handle retaining clip, then remove the handle and the escutcheon.

(5) Using a broad bladed screwdriver, carefully lever the trim panel outwards and disengage all the retaining clips. When all the clips have been disengaged, manoeuvre the remote control lever assembly through the trim panel and lift the trim panel from the door.

(6) Carefully remove the plastic sealing sheet from the door inner panel.

Installation is a reversal of the removal procedure with attention to the following points:

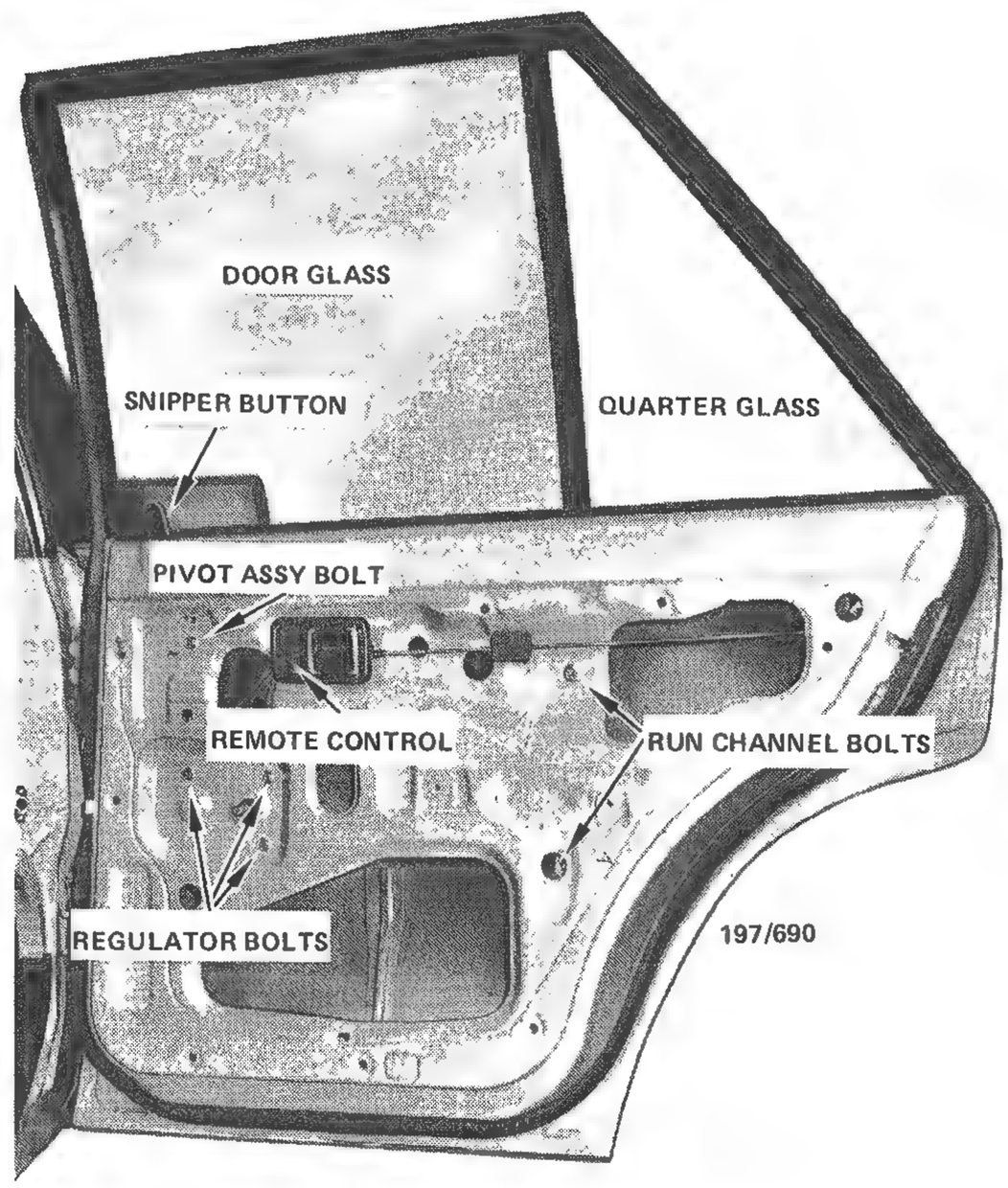

Rear door with trim panel removed.

(1) Ensure that the plastic sealing sheet is correctly installed and not torn or damaged.

(2) Check the trim panel retaining clips and renew any damaged clips as necessary.

(3) Wind the door glass to the closed position and instal the regulator handle to correspond with the regulator handle on the opposite door.

WINDOW REGULATOR, DOOR GLASS AND QUARTER GLASS

To Remove and Instal

(1) Remove the interior handles, the trim panel and the plastic sealing sheet as previously described.

(2) Prise off the weatherseal from the top of the door to gain access to the quarter glass assembly upper retaining screw and remove the screw.

(3) Temporarily instal the regulator handle and wind the door glass to the open position.

(4) Remove the two bolts retaining the rear run channel to the door inner panel and remove the clip from the top of the channel.

(5) Tilt the top of the quarter glass assembly forward and remove it from the door.

(6) Carefully prise the inner and outer weatherstrip from the door glass opening. Take care not to damage the paintwork.

(7) Move the door glass rearwards to disengage the regulator arm roller from the door glass.

(8) Lift up the door glass and remove it through the door glass opening.

(9) Remove the regulator retaining bolts and

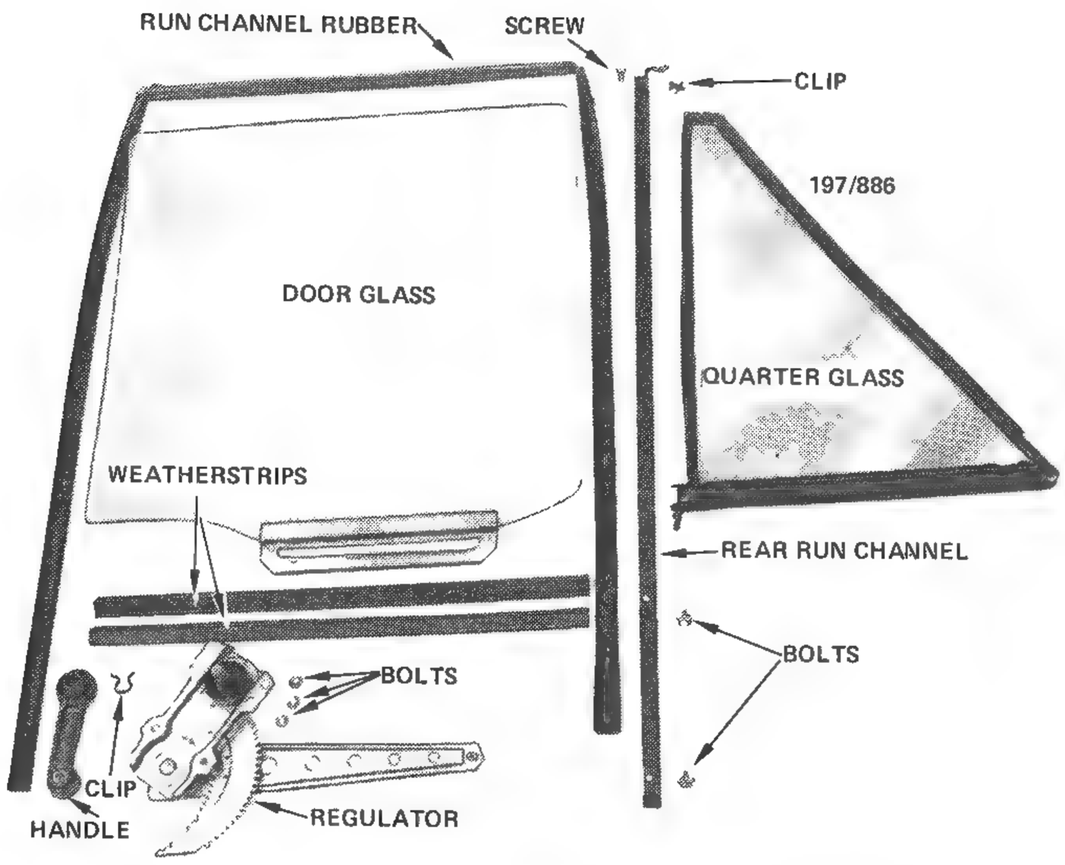

Rear door glass, quarter glass and regulator components.

withdraw the regulator through the work aperture in the door inner panel.

Installation is a reversal of the removal procedure with attention to the following points:

(1) Ensure that the regulator sliding surfaces are adequately lubricated with a zinc oxide grease.

(2) Ensure that the door glass slides freely in the run channels, if necessary adjust the rear run channel by moving it in its slotted holes.

(3) Ensure that the weatherseal at the top of the door is correctly installed in its groove.

(4) Instal the plastic sealing sheet, the trim panel and the interior handles as previously described.

REMOTE CONTROL AND DOOR LOCK

To Remove and Instal

(1) Remove the interior handles, the trim panel and the plastic sealing sheet as previously described.

(2) Remove the bolt retaining the snipper button pivot assembly and disconnect the snipper button operating link from its locating clip.

NOTE: If it is not necessary to remove the snipper button assembly, disconnect the snipper button assembly operating link from the door lock.

(3) Remove the three screws retaining the door lock to the door frame. Manoeuvre the door lock the snipper button pivot assembly and the remote control from the rear work aperture.

Installation is a reversal of the removal procedure ensuring that the operation of the door lock is checked prior to installing the plastic sheeting, the trim panel and the interior handles as previously described.

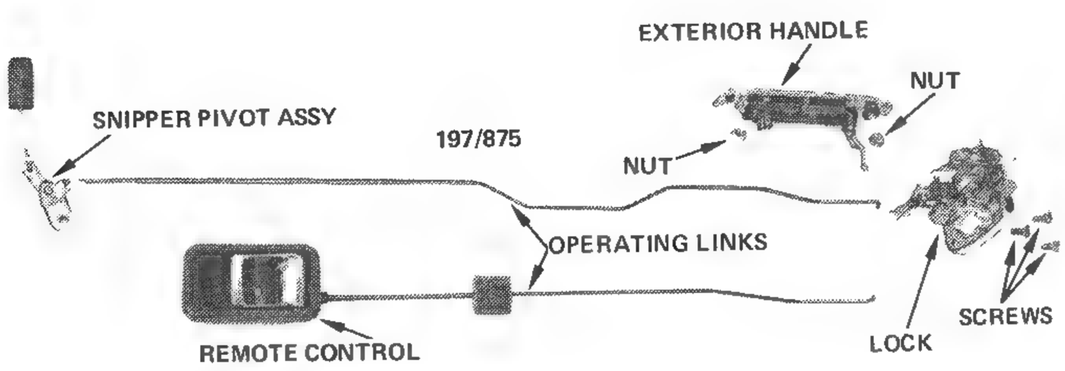

Rear door lock and remote control components.

EXTERIOR DOOR HANDLE

To Remove and Instal

(1) Remove the interior handles, the trim panel and the plastic sealing sheet as previously described.

(2) Remove the two exterior door handle retaining nuts and remove the exterior door handle from the door.

Installation is a reversal of the removal procedure with attention to the following points:

Ensure that the exterior door handle seal is in a serviceable condition and is correctly installed to prevent the entry of dust and water.

Check the operation of the door lock and the exterior door handle prior to installing the plastic sealing sheet, the trim panel and the interior handles as previously described.

LOCK STRIKER PLATE

To Remove, Instal and Adjust

(1) Mark the position of the striker plate on the door pillar with a soft lead pencil to facilitate correct replacement of the striker plate.

(2) Remove the two screws retaining the striker plate to the door pillar and remove the striker plate. Inspect the striker plate for wear and renew as necessary.

(3) Instal the striker plate to the door pillar according to the pencil marks made on removal.

(4) Close the door and observe the alignment with the body panel. If necessary loosen the striker plate retaining screws and move the striker plate in or out to achieve a flush fit between the door and the body panel.

(5) If the door lifts or drops when the lock engages the striker plate, loosen the screws and move the striker plate up or down to eliminate the lift or drop.

NOTE: After each adjustment tighten the striker plate screws and check the adjustment. Readjust as necessary.

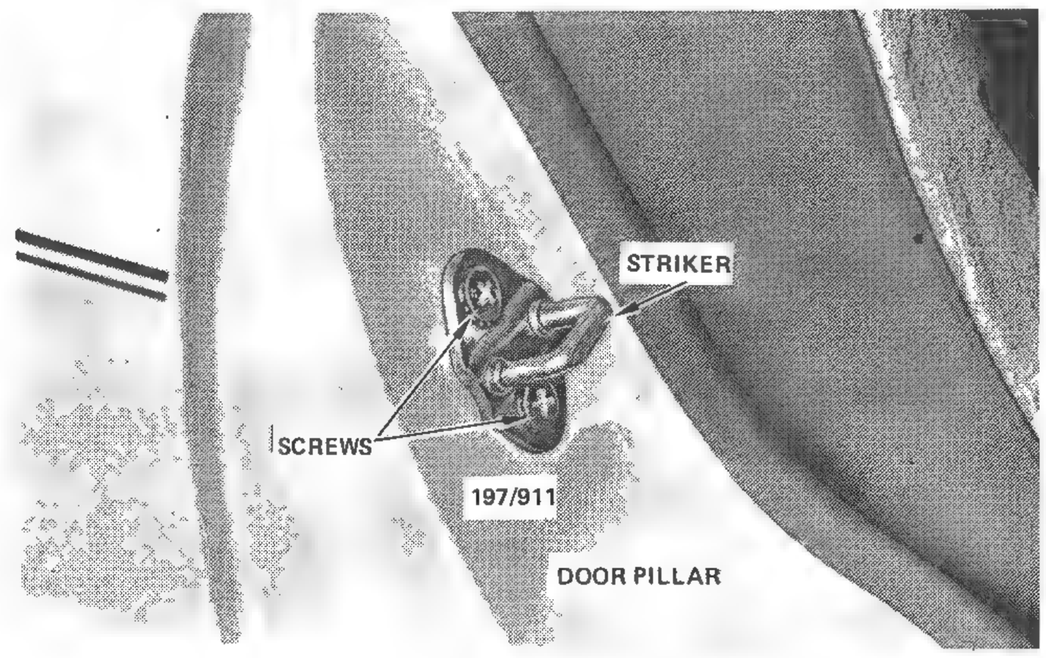

Installed view of rear door lock striker plate.

4. REAR SIDE GLASS – 3 DOOR MODELS

TO REMOVE AND INSTAL

(1) Open the rear side glass.

(2) Remove the two hinge covers from the hinges on the door pillar.

(3) Remove the screws retaining the closing mechanism to the rear side glass, separate the closing mechanism from the glass and collect the retaining components.

(4) While supporting the rear side glass, remove the screws retaining the hinges to the rear side glass and remove the rear side glass from the vehicle.

Installation is a reversal of the removal procedure.

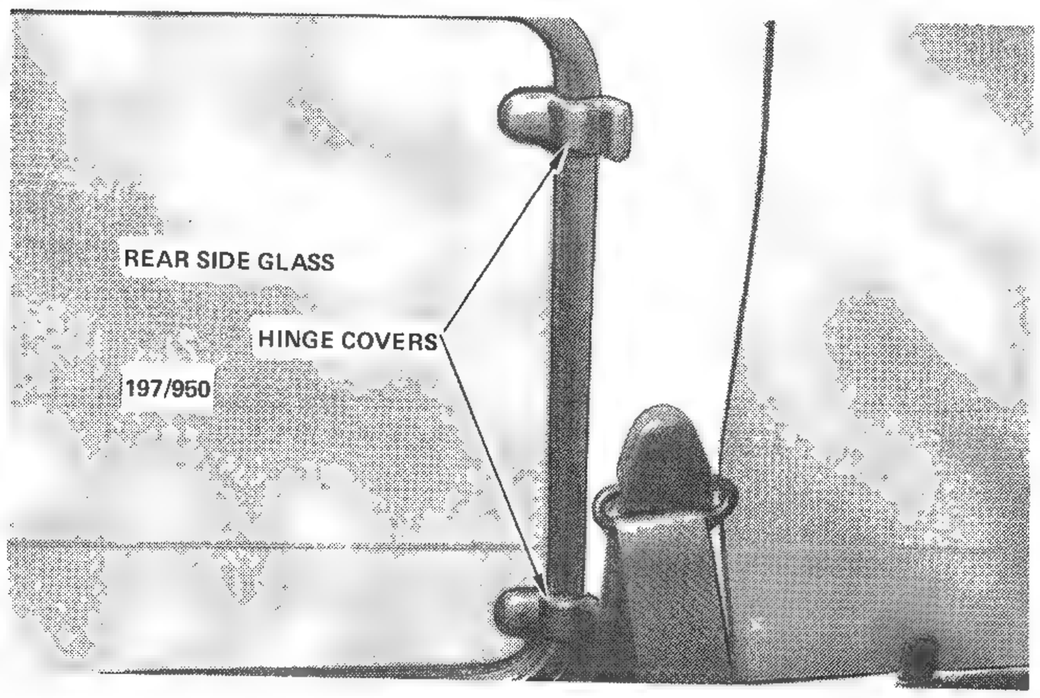

Installed view of rear side glass, 3 door model.

5. ENGINE BONNET

TO REMOVE AND INSTAL

(1) Raise the engine bonnet and place fender covers on both front fenders.

(2) Remove the 'E' clips from the bonnet hinge pins, discard the 'E' clips if deformed or damaged.

(3) With the aid of an assistant supporting the bonnet, remove the two bolts retaining the bonnet stay to the bonnet.

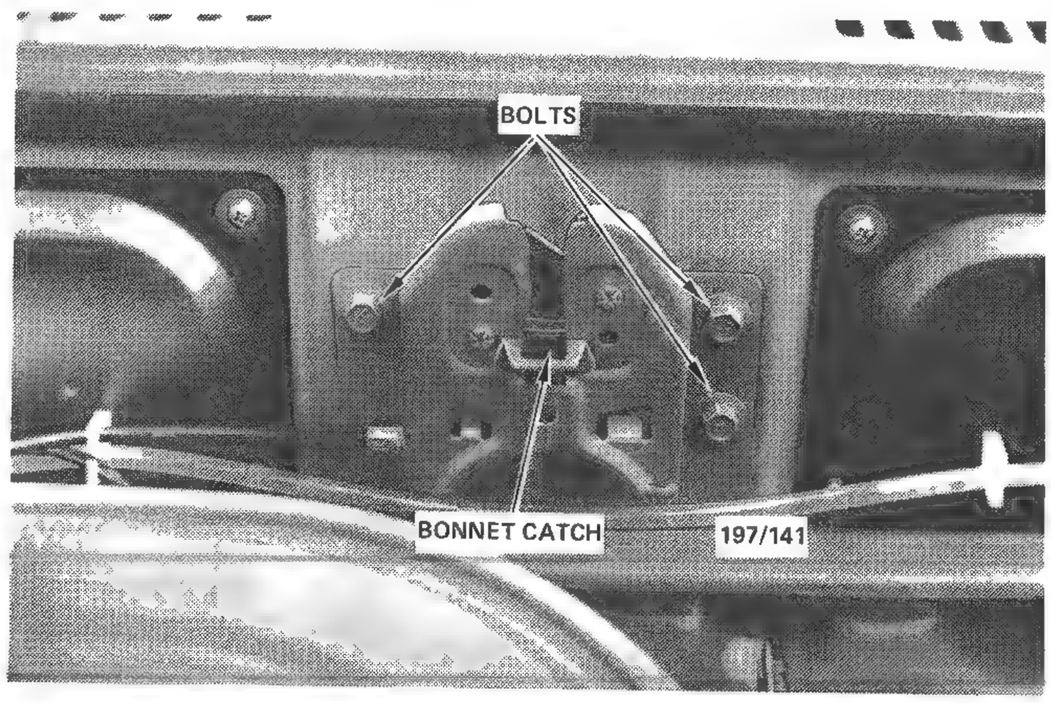

Installed view of the bonnet catch mounted on the bulkhead.

(4) Using a suitable pair of pliers, withdraw the bonnet hinge pins and remove the bonnet from the vehicle.

Installation is a reversal of the removal procedure.

TO ADJUST

(1) Close the bonnet and observe the alignment with the body panels and the front fenders.

(2) If necessary loosen the three bonnet catch to bulkhead retaining bolts and move the bonnet catch up or down to achieve a flush fit with the body panels and the front fenders.

(3) Also ensure that the bonnet striker plate enters centrally into the bonnet catch.

(4) If necessary loosen the three bonnet catch bolts and move the bonnet catch to the left or the right to centralize the striker plate in the bonnet catch.

NOTE: After each adjustment tighten the bonnet catch bolts and recheck the adjustment. Readjust as necessary.

6. LUGGAGE COMPARTMENT LID

TO REMOVE AND INSTAL LID

(1) Disconnect the negative battery terminal.

(2) Raise the luggage compartment lid and place protective covers over the surrounding paintwork.

(3) If applicable, carefully lever out the luggage compartment lamp from the trim panel and noting their installed positions, disconnect the wires from the lamp. Remove the lamp from the luggage compartment lid.

(4) Withdraw the centre of the clips retaining the trim panel to the luggage compartment lid and withdraw the clips. When all the clips are withdrawn remove the trim panel from the luggage compartment lid.

(5) Using a soft lead pencil, mark around the luggage compartment lid hinge on the luggage compartment lid.

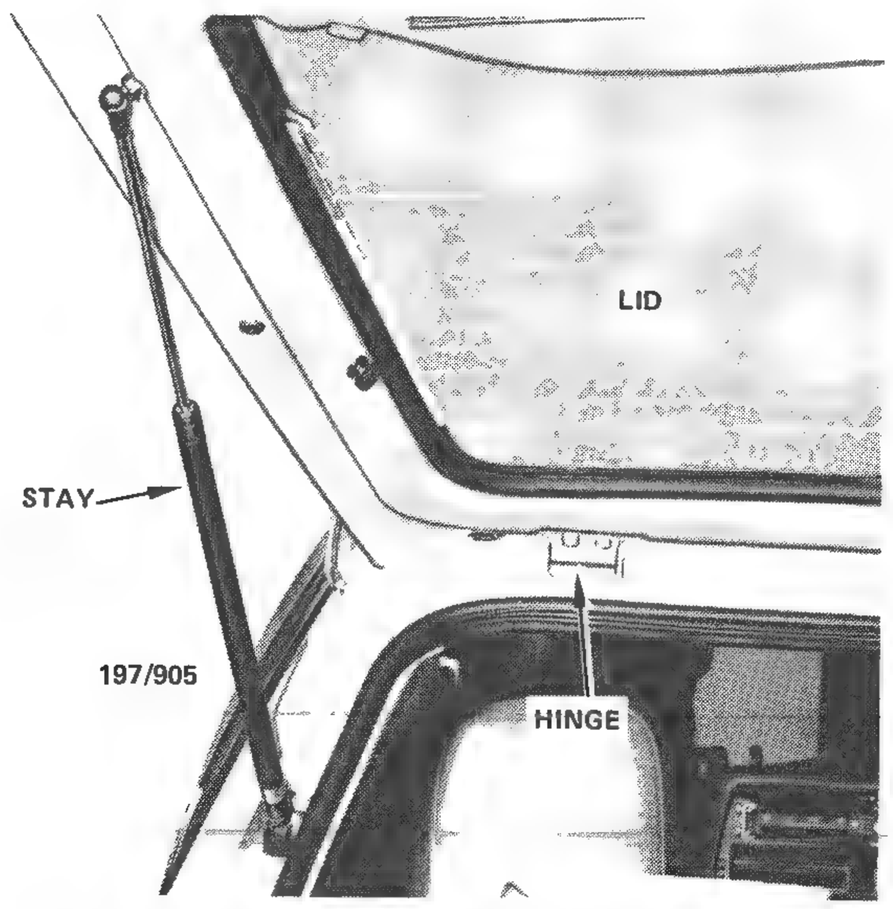

Installed view of luggage compartment lid.

(6) If applicable, disconnect the wiring connectors for the rear wiper motor and the rear window demister. Remove the bolt retaining the earth wire to the luggage compartment lid. Disconnect the grommet for the wiring harness and withdraw the wiring harness through the lid. Also disconnect the grommet for the washer tube, disconnect the tube and withdraw it from the lid.

(7) With the aid of an assistant supporting the luggage compartment lid, remove the bolts retaining the lid stays to the body.

(8) Remove the bolts retaining the hinges to the luggage compartment lid and carefully remove the lid from the vehicle.

Installation is a reversal of the removal procedure ensuring that the pencil marks made on removal are aligned.

TO ADJUST LID

(1) Raise the luggage compartment lid, loosen the hinge to luggage compartment lid retaining bolts and retighten them finger tight.

(2) Close the luggage compartment lid and by pushing with the hand, position the lid evenly in its opening.

(3) Open the lid carefully and tighten the retaining bolts.

(4) Recheck for correct positioning, if necessary, loosen one hinge at a time to adjust.

TO ADJUST LOCK STRIKER PLATE

(1) Raise the luggage compartment lid, loosen the striker plate retaining bolts and retighten them finger tight.

(2) Close the luggage compartment lid and push it firmly shut.

(3) Carefully open the luggage compartment lid without moving the striker plate.

(4) Tighten the striker plate retaining bolts, close the luggage compartment lid and check the ease of operation of the lock. Ensure that a minimum of free play exists between the lid and the weatherseal, which would allow the entry of water or dust. Readjust the striker plate if necessary.

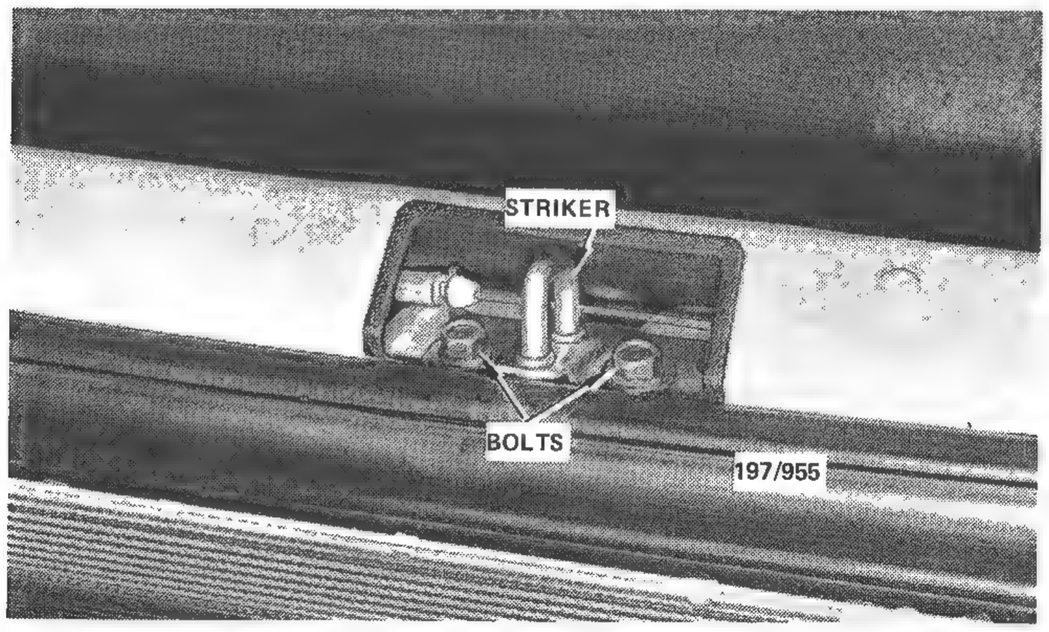

Installed view of luggage compartment lid lock striker plate.

TO REMOVE AND INSTAL LOCK AND LOCK CYLINDER

(1) Disconnect the negative battery terminal.

(2) Raise the luggage compartment lid.

(3) If applicable, carefully lever out the luggage compartment lamp from the trim panel and noting their installed positions, disconnect the wires from the lamp. Remove the lamp from the luggage compartment lid.

(4) Withdraw the centre of the clips retaining the trim panel to the luggage compartment lid and withdraw the clips. When all the clips withdrawn, remove the trim panel from the luggage compartment lid.

(5) Disconnect the operating link from the lock cylinder and disconnect the wiring connector.

(6) Remove the two lock retaining bolts and withdraw the lock from the luggage compartment lid.

(7) Using a suitable screwdriver, remove the lock cylinder retaining clip and withdraw the lock cylinder from the luggage compartment lid.

Installation is a reversal of the removal procedure with attention to the following point:

Check the operation of the lock and adjust the position of the striker plate, if necessary, as previously described.

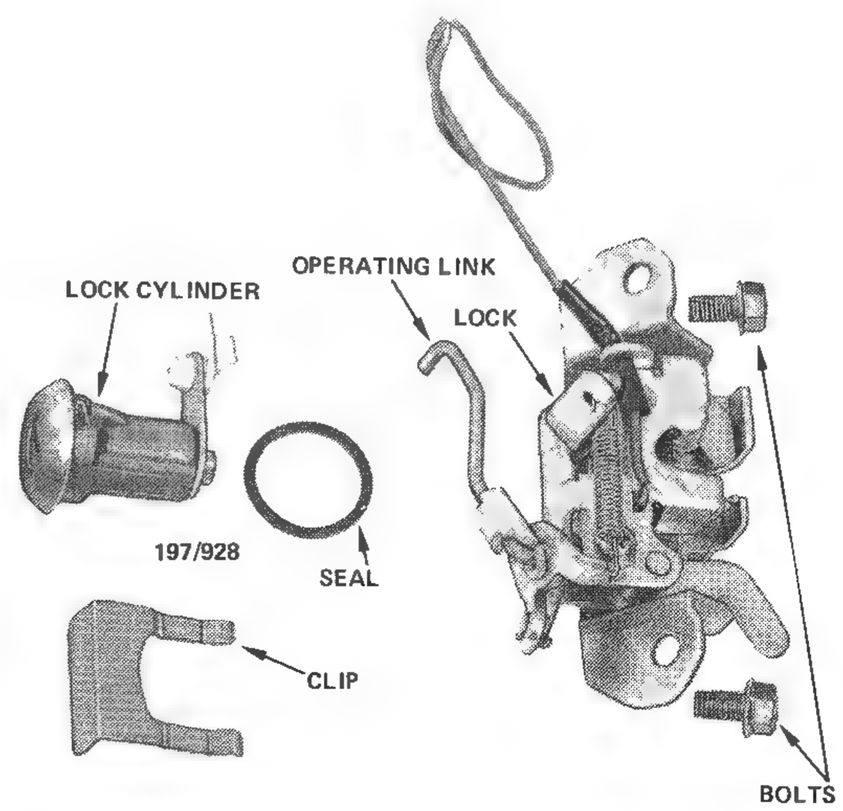

Luggage compartment lock and lock cylinder.

7. RADIATOR GRILLE

TO REMOVE AND INSTAL

(1) Using a suitable Phillips screwdriver remove the six screws retaining the grille to the body.

NOTE: The grille retaining screws locate into quick release clips which in an emergency can be released from behind the grille.

(2) Pull the grille forward and place it aside. Installation is a reversal of the removal procedure.

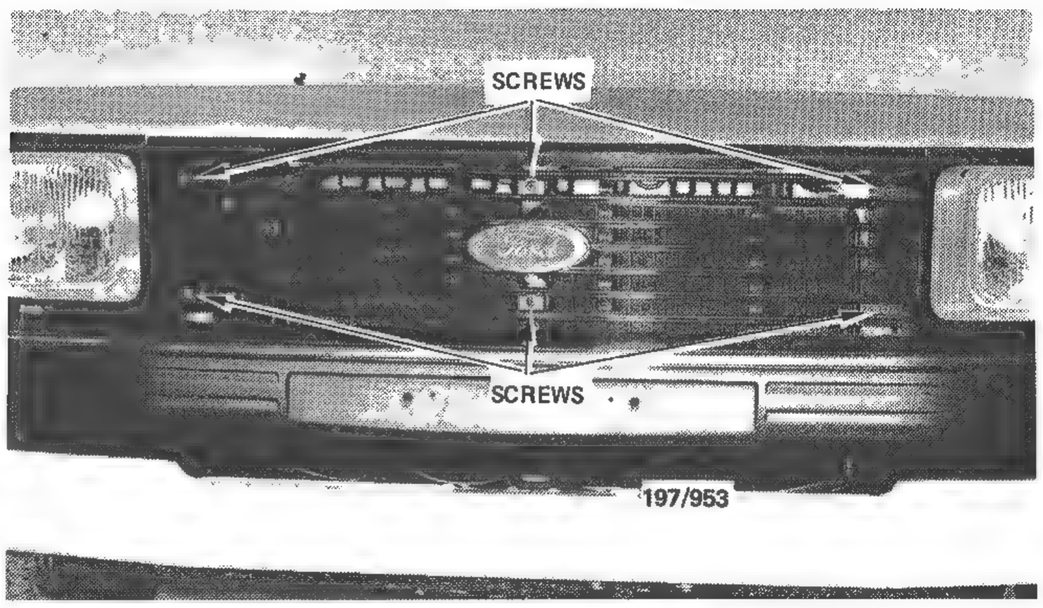

View of radiator grille showing location of retaining screws.

8. CENTRE CONSOLE

TO REMOVE AND INSTAL

(1) Disconnect the negative battery terminal and firmly apply the handbrake.

(2) On manual transmission models, unscrew and remove the gear knob.

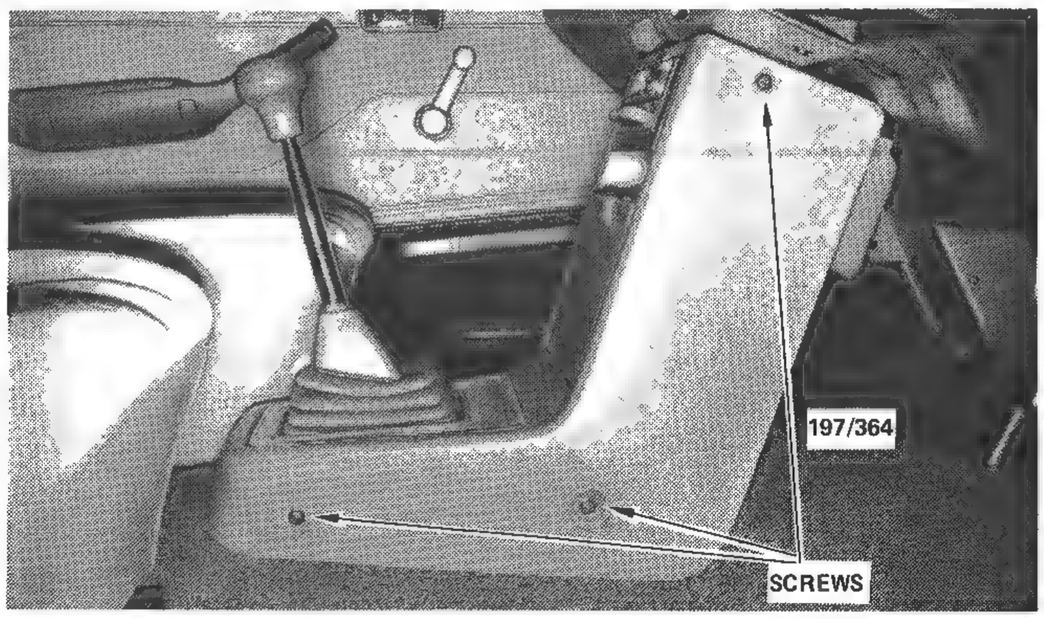

Installed view of the centre console, showing the location of three retaining screws. The remaining three are located on the other side of the console in a similar position.

(3) On automatic transmission models, loosen the locknut and unscrew and remove the 'T' bar handle and locknut.

(4) Remove the six screws retaining the centre console and slide the centre console rearwards.

(5) Disconnect the wiring connectors from behind the centre console and manoeuvre the centre console from the vehicle.

Installation is a reversal of the removal procedure.

9. VEHICLE CLEANING

CLEANING THE EXTERIOR

In order to remove dirt and road grime and thus preserve paint finish, vehicles in continuous use should be washed at least once a week.

Before washing the paintwork it is good policy to first hose all dirt from the underbody and clean out the drain holes in the doors and sill panels.

Hose the vehicle first to remove as much grit as possible then wash using a clean chamois or sponge, ensuring that the chamois or sponge is free from dirt or grit which could scratch the paint surface.

Avoid washing the vehicle in bright sunlight with high temperatures as this will give the paintwork a streaky watermarked finish.

If necessary wash the vehicle using a reputable brand 'Wash and Wax' liquid. The 'Wash and Wax' liquid will restore the paint lustre and leave the paintwork with a protective coating of wax.

After a period it may become necessary to polish the vehicle in order to remove built up of foreign matter and to give the paintwork maximum protection from industrial fall-out, and salt from sea air etc. Before polishing the paintwork always wash the surface to remove as much road grime as possible. When polishing follow the polishing instructions which come with the polish.

NOTE: Grease, oil or tar on the paint surface can be removed with a little kerosene or white spirits. To prevent from staining, wash and polish the affected area as soon as the grease, oil or tar is removed.

GENERAL CLEANING OF VINYL UPHOLSTERY AND TRIM

To maintain the vinyl upholstery and interior trim in good condition it should be regularly vacuumed over to remove loose dirt and then wiped over with a dry or damp cloth.

If the upholstery is soiled or stained the following cleaning procedure is recommended:

(1) Using warm water, cheese cloth and a mild soap thoroughly wash the affected areas.

(2) Repeat the operation using damp cheese cloth only.

(3) To complete the cleaning operation wipe the upholstery over with a dry piece of cheese cloth.

NOTE: If the upholstery or interior trim is badly soiled or stained, wash with a reputable brand of upholstery cleaner carefully following the makers instructions.

TO REMOVE STUBBORN STAINS ON VINYL UPHOLSTERY AND TRIM

NOTE: The following cleaning procedures with recommended removal agents should be used before contemplating trim renewal.

Chewing Gum

(1) Apply an ice cube to harden the gum.

(2) Remove as much of the gum as possible with the edge of a spoon.

(3) Wipe the remaining gum off with a cloth moistened with methylated spirits.

(4) Finish by washing the affected area with warm soapy water and drying with a clean cloth.

Grease and Other Fatty Stains

(1) Use a clean dry cloth and remove as much of the grease as possible taking care not to spread the grease any further.

(2) Carefully wipe away the remaining grease using a cotton cloth moistened with methylated spirits or mineral turps.

(3) Finish by washing the affected area with warm soapy water and drying with a clean cloth.

Chocolate

(1) Remove as much of the chocolate as possible with the edge of a spoon.

(2) Wipe the remaining chocolate off with a cloth moistened with methylated spirits.

(3) Finish by washing the affected area with warm soapy water and drying with a clean cloth.

Ballpoint Pen Inks

(1) Mix up equal parts of fresh Calcium Chloride and Fullers Earth. The Calcium Chloride and Fullers Earth can be purchased at the local chemist.

(2) Add a few drops of methylated spirits and mix all ingredients into a thick paste.

(3) Apply the paste to the ink stain and allow it to dry.

(4) Remove the dried paste with a damp cloth.

(5) Finish by wiping the affected area with a wet cloth and drying with a clean cloth.

(6) If some of the ink stain still remains, repeat the cleaning procedure.

NOTE: If the removal of the ink stain leaves the affected area dull, the affected area can be revived by wiping over with cotton wool moistened with glycerine.

Toffee

(1) Remove as much of the toffee as possible with the edge of a spoon.

(2) Wash as much of the remaining toffee off using a soft cloth and very hot water.

(3) To finish the cleaning operation first wipe the affected area over with a cloth moistened with methylated spirits then wash with warm soapy water and dry with a clean cloth.

Blood

(1) Wash the affected area immediately with cold water.

(2) If the affected area is still stained, wipe over with household ammonia.

(3) Finish by washing with warm soapy water and drying with a clean cloth.

Liquor and Fruit Stains

(1) Wash the affected area with very hot water and allow it to dry.

(2) When dry wipe over with a clean cloth moistened with methylated spirits.

(3) Finish by washing the affected area with cold water.

Tar

(1) Wipe with a clean cloth moistened with mineral turps or kerosene.

(2) Finish by washing affected area with cold water.

NOTE: Quick action is most essential with tar stains. If the tar is left on the upholstery for any length of time permanent staining will result.

Ice Cream

(1) Wash the affected area with warm soapy water.

(2) If the stain still remains wash repeatedly with very hot soapy water.

(3) Finish by wiping over the affected area with a cloth moistened with methylated spirits and washing again with warm soapy water.

CLEANING CLOTH TRIM

Loose dirt and dust on cloth trim should be removed with a vacuum cleaner or a very soft brush. Do not use whisk brush or any other type of coarse brush or damage to the cloth could result. If the fabric is soiled the following cleaning procedure is recommended:

(1) Sponge the fabric lightly with warm water containing a little detergent and household ammonia.

(2) After sponging rub the fabric lightly. If soiling is still apparent repeat the sponging operation.

(3) Use a clean dry cloth to soak up excess fluid.

INTRODUCTION

To reduce the output levels of carbon monoxide (CO), hydrocarbons (HC) and oxides of nitrogen (NOx) which are the three primary automotive emissions causing air pollution, several emission control systems are used in this range of vehicles.

The systems are known as and will be discussed under the headings (1) Crankcase Ventilation System, (2) Exhaust Control System and (3) Evaporative Control System.

1. CRANKCASE VENTILATION SYSTEM

DESCRIPTION

The crankcase ventilation system is of the closed type. This system draws clean induction air from within the air cleaner assembly through a filter pad and a hose which is connected to the rocker cover.

The air is then passed through the engine and into the inlet manifold via a hose and regulating valve (PCV valve). Crankcase vapours are thereby fed back into the cylinders and consumed.

The engine oil dipstick and filler cap are sealed to the atmosphere to ensure that the correct flow of clean filtered air is passed through the engine and to prevent crankcase vapours from escaping from the engine.

This system is most effective at part throttle operation where a medium high vacuum is present in the inlet manifold, causing the PCV valve to open and allow all crankcase vapours to be scavenged from the crankcase. At full throttle operation the manifold vacuum is insufficient to draw all crankcase vapours through the PCV valve and into the inlet manifold. Under these conditions the crankcase ventilation flow is reserved, with the crankcase vapours being drawn into the air cleaner instead of the inlet manifold.

A baffle plate arrangement located in the rocker cover prevents engine oil from being drawn upwards into the air cleaner or into the inlet manifold.

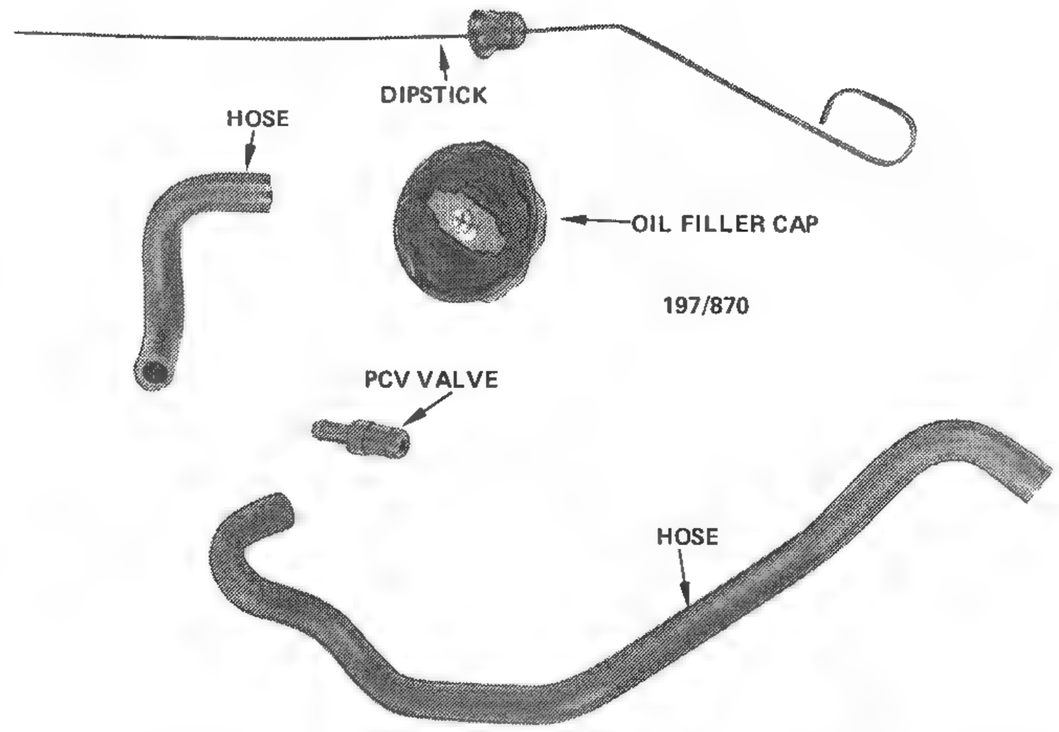

Dismantled view of Positive Crankcase Ventilation (PCV) components.

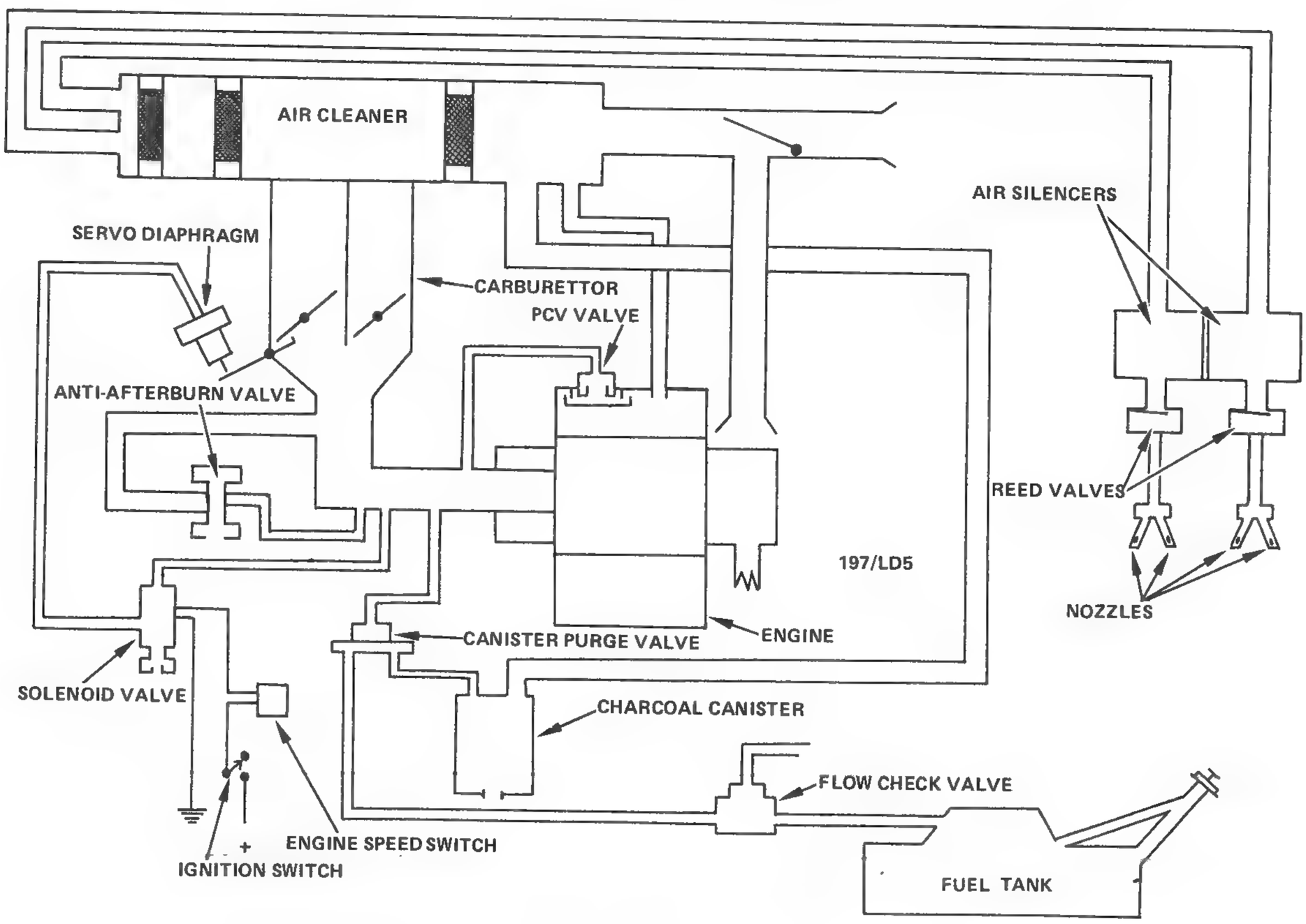

Schematic layout of emission control systems, except EGR system.

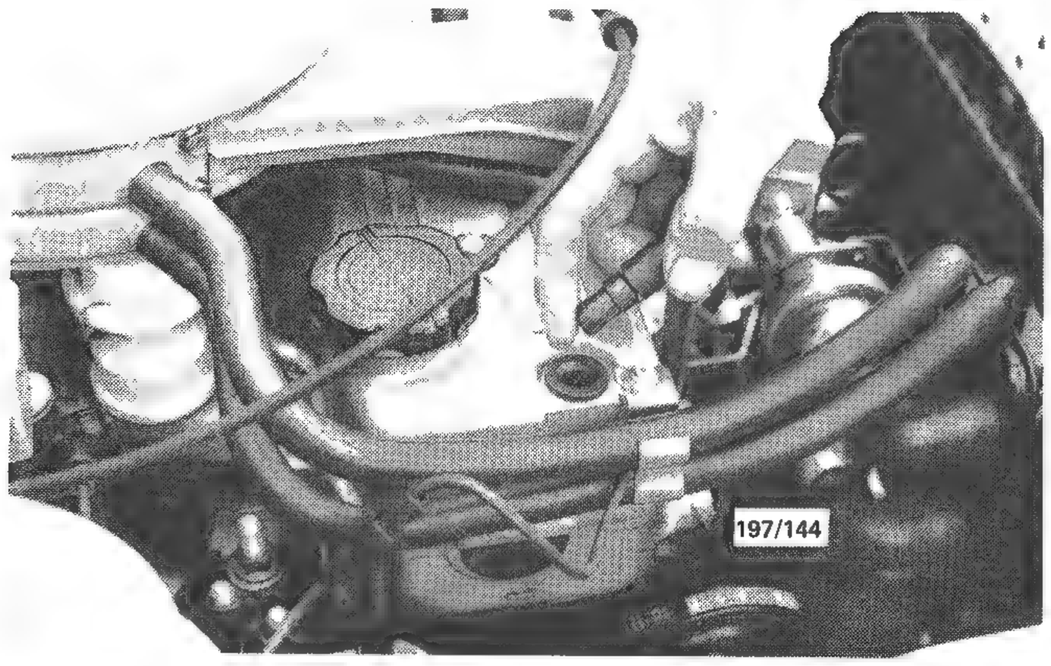

Checking PCV valve operation.

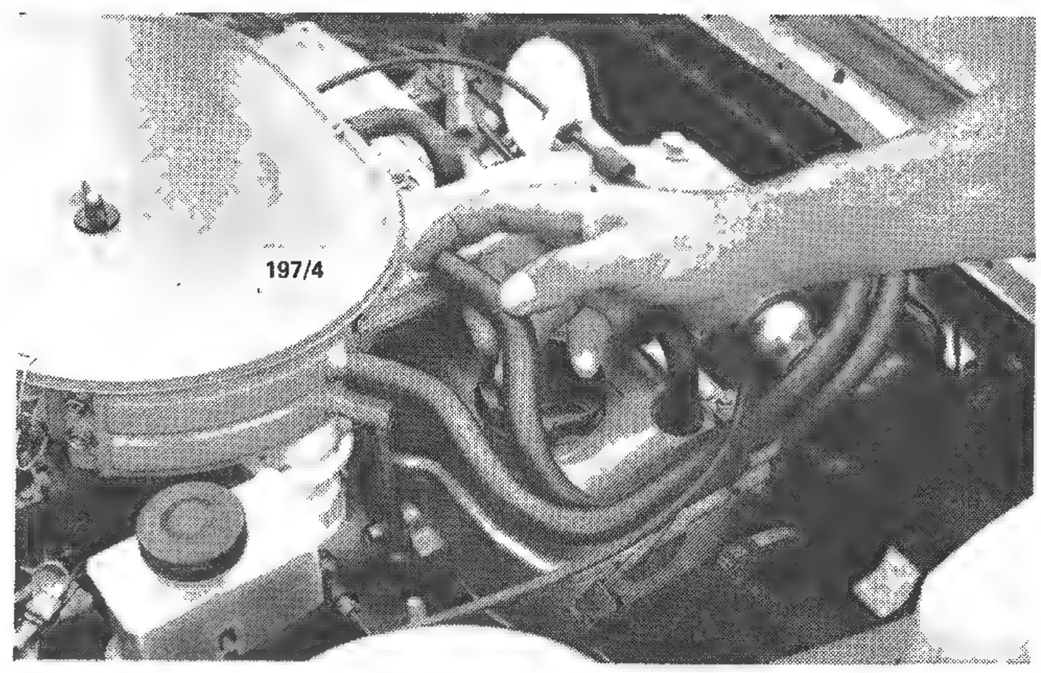

Checking reed valve operation.

If the engine is excessively worn and blow-by is at a high level, then irrespective of throttle operation, a certain amount of crankcase vapour will re-cycle back through the rocker cover and into the air cleaner.

TO CHECK OPERATION

(1) Start the engine and allow it to reach normal operating temperature. Switch off the engine.

(2) Disconnect the PCV valve from the rocker cover.

(3) Start the engine and allow the engine to idle.

(4) Place a finger over the valve opening. The PCV valve is operating correctly if the engine speed drops. If the engine speed does not alter then the PCV valve is faulty and should be renewed.

2. EXHAUST CONTROL SYSTEM

This is the greatest source of pollutant emission from the internal combustion engine, therefore it is toward curbing emissions from this source that most systems are employed.

The Exhaust Control System employs several individual systems which are: Air injection, deceleration control and exhaust gas recirculation (EGR).

All models are equipped with the air injection system and the deceleration control system. The exhaust gas recirculation system (EGR) is only fitted to automatic transmission models.

AIR INJECTION SYSTEM

Description

To aid complete combustion of the air-fuel mixture, extra oxygen is introduced to the exhaust system by way of the air injection system. In doing so the emissions of hydrocarbon and carbon monoxide to the atmosphere is reduced.

The system comprises of two reed valves, supply pipes and four injection nozzles in the exhaust manifold.

Due to the design of the exhaust manifold the pulsations of the exhaust create a vacuum in the air injection nozzles, drawing air via the reed valves and the air silencers, thereby enriching the exhaust emission with oxygen.

When pressure in the exhaust system exceeds the air pressure in the air injection system, due to engine speed increase, or due to a mechanical failure such as a bad hose connection, air leak etc., the back pressure closes the reed in the valve and so prevents hot exhaust gases from entering the air cleaner.

The reed valve and supply pipes are non repairable and if the components are found to be defective they must be renewed. The air injection nozzles however can be cleaned.

To Check Air Injection System Operation

(1) Start the engine and allow it to reach normal operating temperature.

(2) Disconnect the hose from the air silencer and with the engine at idle, check that suction is evident at the reed valve inlet.

(3) If there is no suction into the reed valve, the valve may be faulty or the injection nozzles or pipes may be clogged.

(4) Test the reed valve by increasing the engine speed at 1500 rpm and place a finger over the hose if exhaust gas pressure is felt on the finger then the reed valve is faulty and must be renewed.

DECELERATION CONTROL SYSTEM

Description

To further reduce the emission of hydrocarbons and carbon monoxide a deceleration control system is fitted to prevent after burn conditions in the exhaust system.

The deceleration control system consists of an anti-afterburn valve and on manual transmission models a throttle positioner. The anti-afterburn valve is only effective for a few seconds after the throttle pedal is released. When triggered by high manifold vacuum it allows additional air to enter the inlet manifold. The servo diaphragm fitted to manual transmission models is controlled by a solenoid and engine speed switch and is actuated by manifold vacuum. The purpose of the servo diaphragm is to hold the primary throttle valve slightly open on

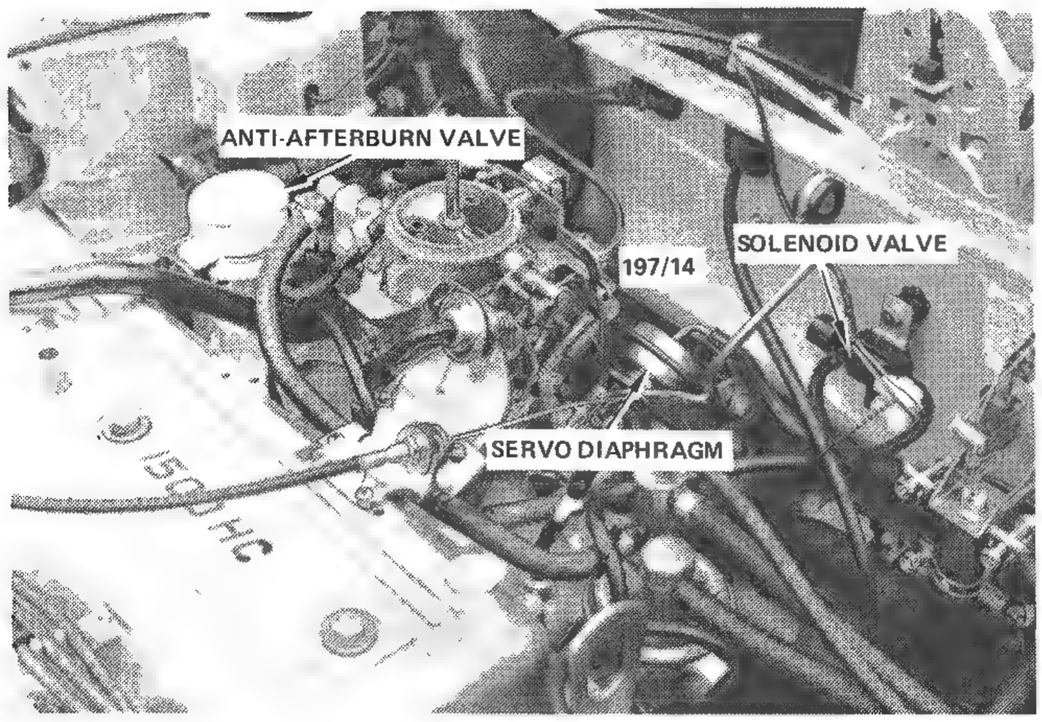

Installed view of the anti-afterburn valve, servo diaphragm and three way solenoid valve.

deceleration to allow complete combustion of the air fuel mixture.

The three way solenoid valve is connected between the inlet manifold and the servo diaphragm and is mounted on the bulkhead. The valve is activated by battery voltage sent to its built-in solenoid from the engine speed unit, mounted on the right hand side panel under the dash assembly, which at 1500 rpm or more switches the solenoid to the OFF position thereby allowing vacuum to pass through the valve to the servo diaphragm. At less then 1500 rpm the solenoid is switched ON so blocking the vacuum passage.

To Check Engine Speed Unit

(1) Connect a voltmeter between the yellow/black and the brown/white wire connectors on the engine speed unit.

(2) Connect a tachometer to the engine and start and run the engine until it reaches normal operating temperature.

(3) Decrease the engine speed slowly from 3000 rpm. At approximately 2100 rpm current should cease to flow.

(4) Continue decreasing the engine speed slowly from 2000 rpm. At approximately 1500 rpm current should start to flow again.

(5) Replace the unit if faulty.

To Check Three Way Solenoid Valve

(1) Disconnect the vacuum hose from the manifold to the three way solenoid valve at the manifold.

(2) Disconnect the vacuum hose from the servo diaphragm to the three way solenoid valve at the servo.

(3) Blowing through either hose should be possible.

(4) With the ignition switched on, the hose from the manifold should be blocked and the hose from the servo should vent through the filtered air intake of the valve.

(5) Replace the three way solenoid valve if found faulty.

NOTE: When the ignition is switched on a clicking noise can be heard at the three way solenoid valve. If no clicking noise can be detected make sure that there is power available at the valve.

To Check and Adjust Servo Diaphragm

(1) Warm up the engine completely and set the idle speed to Specifications.

(2) Disconnect the three way solenoid valve electrical connector, allowing vacuum to pass through the valve to the servo diaphragm.

(3) Using a tachometer, check the engine speed which should be 1200 ± 100 rpm.

(4) If necessary, adjust the engine speed by turning the servo diaphragm adjusting screw.

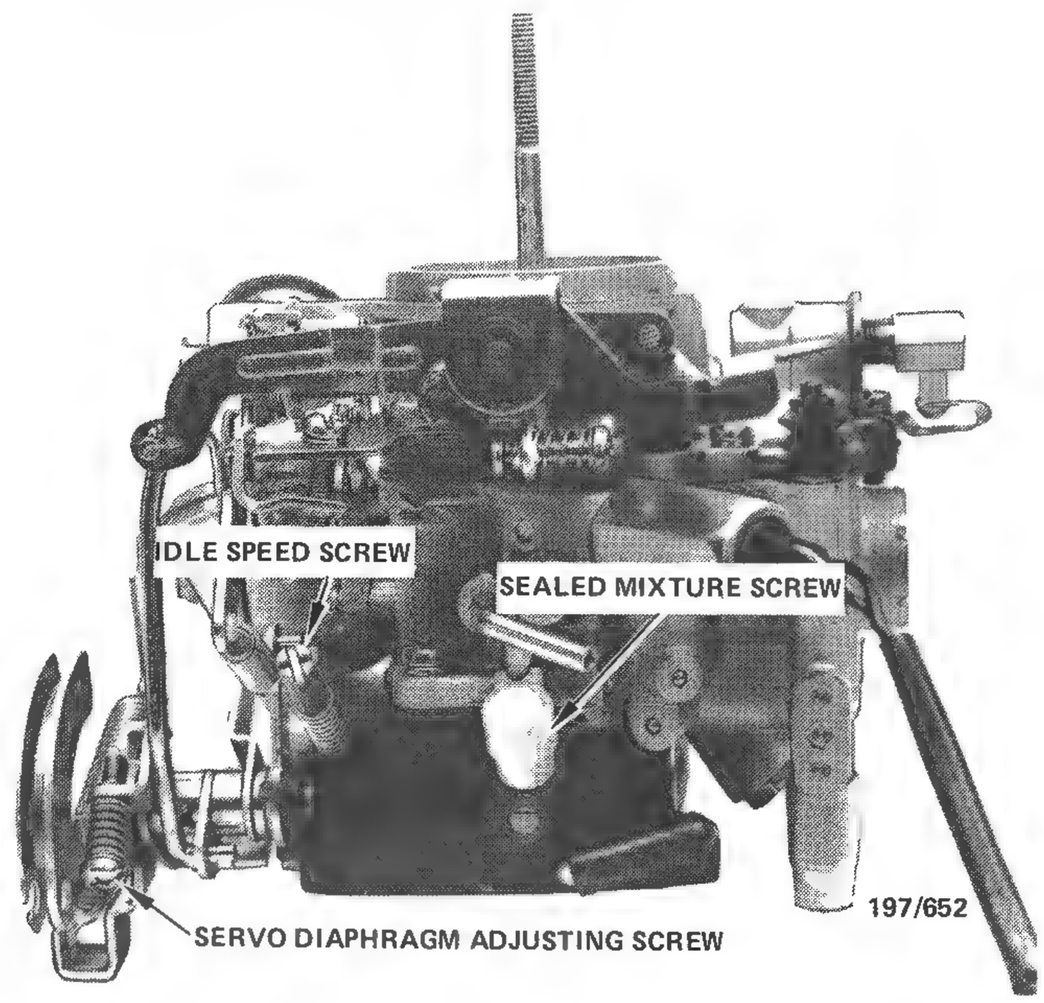

View of carburettor showing servo diaphragm adjusting screw.

(5) Rev the engine once and allow the engine speed to stabilise. The engine speed should again be 1200 ± 100 rpm.

(6) Adjust the servo diaphragm adjusting screw as necessary.

(7) Connect the electrical connector to the three way solenoid valve.

NOTE: If there is a noticeable engine idle speed fluctuation while disconnecting the wire plug to the three way solenoid valve the servo diaphragm is serviceable.

To Check Operation of Anti-Afterburn Valve

(1) Disconnect the air hose from the air cleaner to the anti-afterburn valve at the anti-afterburn valve.

(2) Start the engine and allow it to idle.

(3) Place a finger over the valve air inlet and check that the engine speed does not alter. Remove the finger.

(4) Raise the engine speed to approximately 4,000 rpm and quickly release the throttle. Air should be sucked into the anti-afterburn valve. If air is not sucked in, renew the anti-afterburn valve.

3. EXHAUST GAS RECIRCULATION SYSTEM (EGR)

DESCRIPTION

To further decrease pollution levels in the motor vehicle exhaust emission, a portion of the exhaust gases are recirculated through the engine. This reduces the volume of the combustible mixture and so the internal temperature, hence the NO level.

The EGR system is fitted to vehicles with automatic transmissions only, and comprises a vacuum controlled EGR valve and a coolant thermo vacuum valve. The coolant thermo vacuum valve is located on the lower side of the water heated inlet manifold and is in contact with and regulated by the engine coolant.

When the engine coolant reaches 55 deg. C. the thermo valve allows vacuum to reach the vacuum diaphragm on the EGR valve. Spring tension against this diaphragm maintains a closed position.

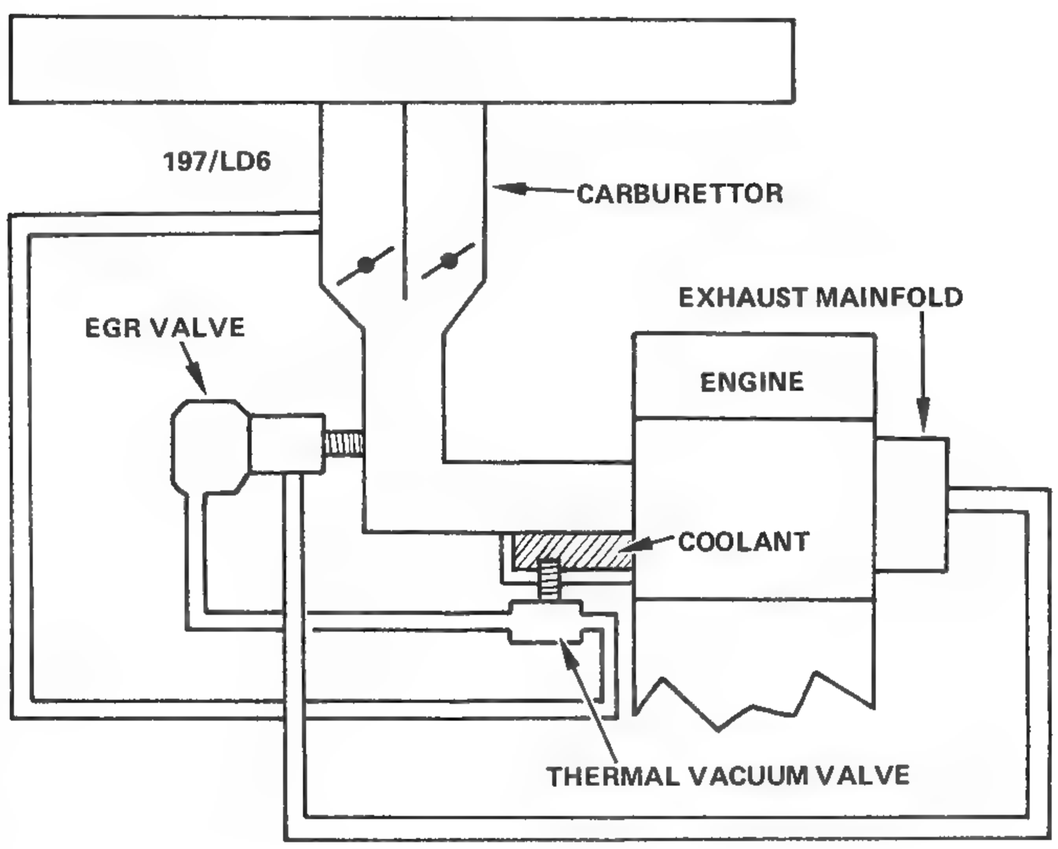

Schematic layout of Exhaust Gas Recirculation (EGR) system.

Applied vacuum, from the thermo valve, opens the diaphragm against the spring pressure and allows exhaust gases to pass through the EGR valve into the inlet manifold.

TO CHECK OPERATION

(1) Visually inspect all vacuum hoses, renew hoses that are cracked or otherwise not serviceable.

(2) Start the engine from cold and while holding a suitable probe or finger against the diaphragm increase the engine speed to approximately 2000 rpm and back to idle speed again. The diaphragm should not move. If it does move, then the thermo vacuum valve is faulty and should be renewed.

(3) Bring the engine temperature to normal operating temperature and repeat the same test. The diaphragm should now move as engine speed increases. If the diaphragm does not move, disconnect the vacuum hose at the EGR valve and place a finger over the end of the vacuum hose. With increased engine speed, if vacuum can be detected, the fault is in the EGR valve.

TO CLEAN EGR VALVE

(1) Remove the air cleaner assembly.

(2) Disconnect the vacuum hose from the EGR valve.

(3) Disconnect the exhaust gas recirculation pipe union nut at the EGR valve.

(4) Remove the bolts securing the EGR valve to the inlet manifold and remove the EGR valve. Note the position of the gasket between the EGR valve and the inlet manifold.

(5) Hold the EGR valve assembly in one hand and with a small plastic hammer gently tap around the sides and end of the valve to loosen the carbon deposits on the valve seat.

(6) Manually depress the diaphragm and visually inspect the valve seat. If carbon deposits are visible repeat the tapping procedure until all carbon deposits are removed.

(7) Remove the carbon deposits from the valve housing and the mounting surface.

NOTE: Do not immerse the EGR valve in cleaning solvent as damage to the diaphragm may occur.

(8) Instal the valve assembly to the inlet manifold with the gasket interposed and securely tighten the retaining bolts.

(9) Connect the vacuum hose ensuring no leakage exists.

(10) Tighten the exhaust gas recirculation pipe union nut securely.

(11) Instal the air cleaner assembly.

4. EVAPORATIVE CONTROL SYSTEM

DESCRIPTION

The evaporative control system is employed to prevent evaporative gases in the fuel tank from entering the atmosphere and so assists in the reduction of hydrocarbon emissions from the vehicle.

The basic components of the evaporative control system are:

(1) Positive sealed fuel tank, (2) Flow check valve, (3) Canister purge valve, (4) Vapour lines and (5) Charcoal canister.

When the engine is at rest, fuel vapour through evaporation gradually fills the air spaces in the fuel tank. As the fuel tank is fitted with a positive type sealed filler cap, vapour pressure builds up within the system.

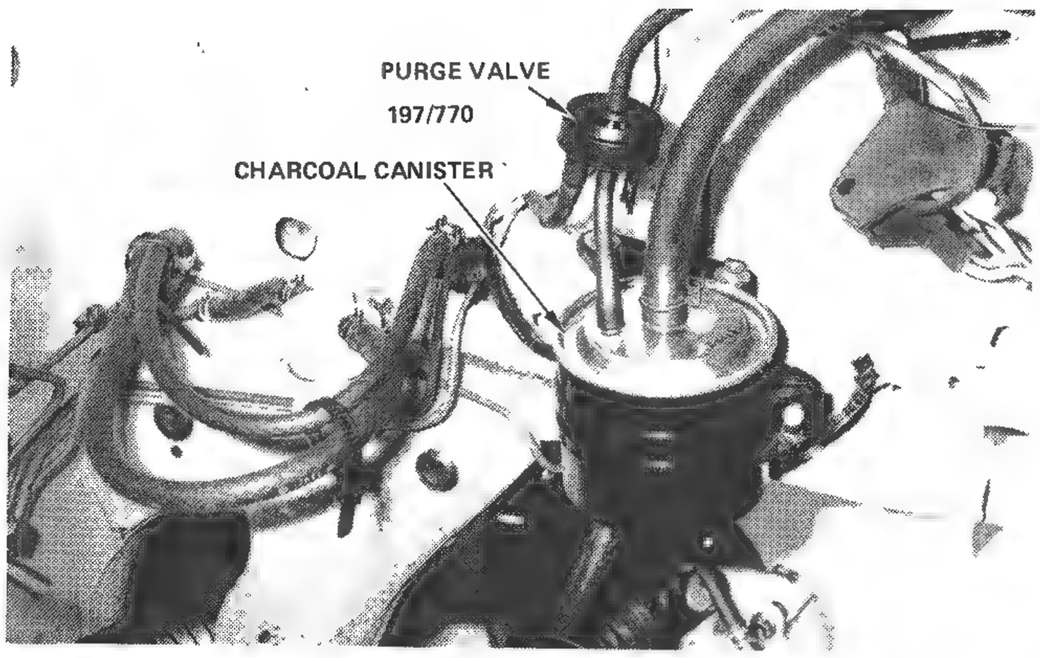

Installed view of charcoal canister and canister purge valve.

The flow check valve opens when vapour pressure reaches a predetermined amount. Excess vapour is then fed into and absorbed in the charcoal canister. When the engine starts, inlet manifold vacuum opens the canister purge valve and vapour is drawn from the charcoal canister via a hose into the inlet manifold to be consumed in the cylinders.

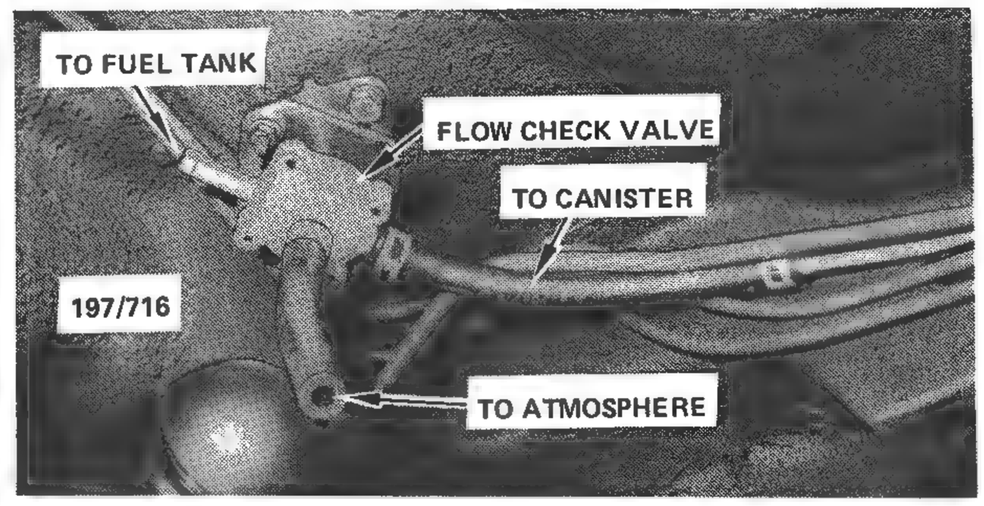

Installed view of flow check valve.

TO CHECK EVAPORATIVE CONTROL SYSTEM

(1) Visually inspect the charcoal canister for damage or signs of leakage, renew the canister as necessary.

(2) Inspect the vapour lines and their connectors, renew the lines if signs of leakage, cracks or deterioration exists.

(3) Renew the flow check valve if excessive vacuum or pressure build up is evident in the fuel tank.

(4) Inspect the fuel tank filler cap seal for deterioration. Renew the filler cap if necessary.

SUPPLEMENT

KB LASER AND GA, GB METEOR

This supplement provides additional specifications and service procedure information to cover KB Laser and GA, GB Meteor models. If the information required is not in this supplement refer to the relevant sections of the main manual.

ENGINE TUNE-UP

1. TUNE UP SPECIFICATIONS

Spark plug type:
Motorcraft AG44CU, AGR44CU
Spark plug gap ..... 0.8 mm
Ignition timing at idle speed ..... 6 deg btdc

Engine idle speed:
Manual transmission ..... 850 ± 50 rpm
Automatic transmission ..... 750 ± 50 rpm (in 'D' range)

Drive belt deflection:
Alternator (new belt) ..... 12–13 mm
Alternator (used belt) ..... 13–14 mm
Air conditioner (new belt) ..... 10–12 mm
Air conditioner (used belt) ..... 12–14 mm
Ignition timing at idle speed ..... 6 deg btdc

2. DRIVE BELTS

It is essential that all drive belts are adjusted to prevent slip but without imposing excessively upon the component bearings, particularly the alternator or water pump bearings.

TO ADJUST FAN BELT

(1) Using finger and thumb pressure push firmly on the belt between the alternator and water pump pulleys to assess the deflection. Refer to Specifications and to the diagram.

(2) If adjustment is required, loosen the alternator lower mounting bolts and the adjusting bracket bolts. Move the alternator in the adjusting slot to achieve the correct belt tension.

(3) When the correct belt tension is obtained tighten the adjusting bracket bolts and the lower mounting bolts securely, recheck the belt tension.

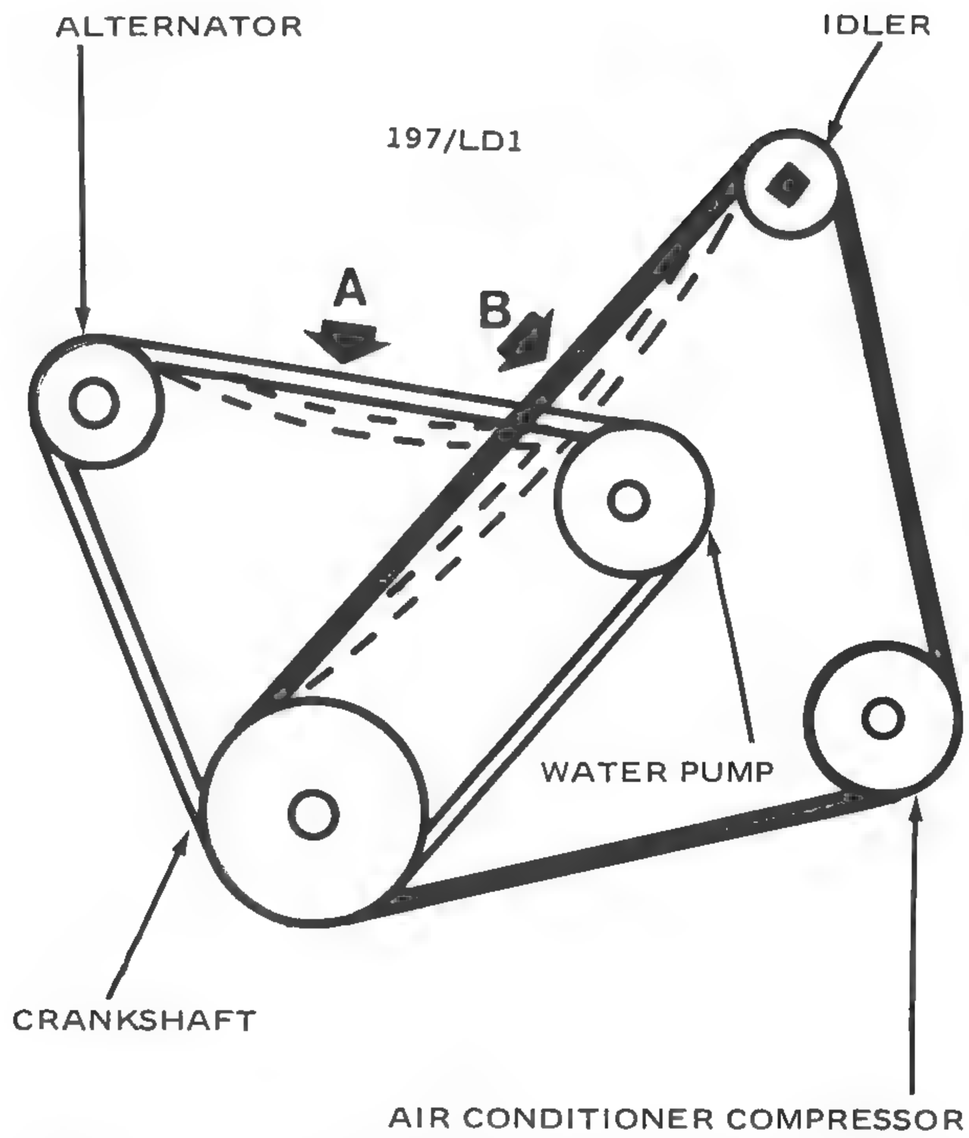

The drive belt tensions should be adjusted so that there is a deflection of 13-14 mm at point A and 12-14 mm at point B.

TO ADJUST AIR CONDITIONER DRIVE BELT

(1) Using finger and thumb pressure push firmly on the belt between the compressor and crankshaft pulleys to assess the deflection. Refer to Specifications.

(2) If adjustment is required, loosen the locknut on the idler pulley.

(3) Rotate the adjusting bolt on the idler pulley until the correct adjustment is obtained.

(4) Securely tighten the locknut and recheck the belt tension.

FUEL SYSTEM

1. AIR CLEANER

DESCRIPTION

The air cleaner assembly consists of a top cover, a paper type element and the air cleaner main body. To one edge of the main body of the air cleaner, the reed valve and air silencer assembly for the exhaust emission system is attached.

The servicing of the air cleaner assembly is confined to periodical cleaning or renewal of the paper element.

The servicing of the exhaust emission air silencer and intake assembly is confined to periodical renewal of the filter elements and ensuring that the reed valves open and close satisfactorily.

An air temperature control valve is installed in the air cleaner to control the temperature of the air being drawn into the carburettor.

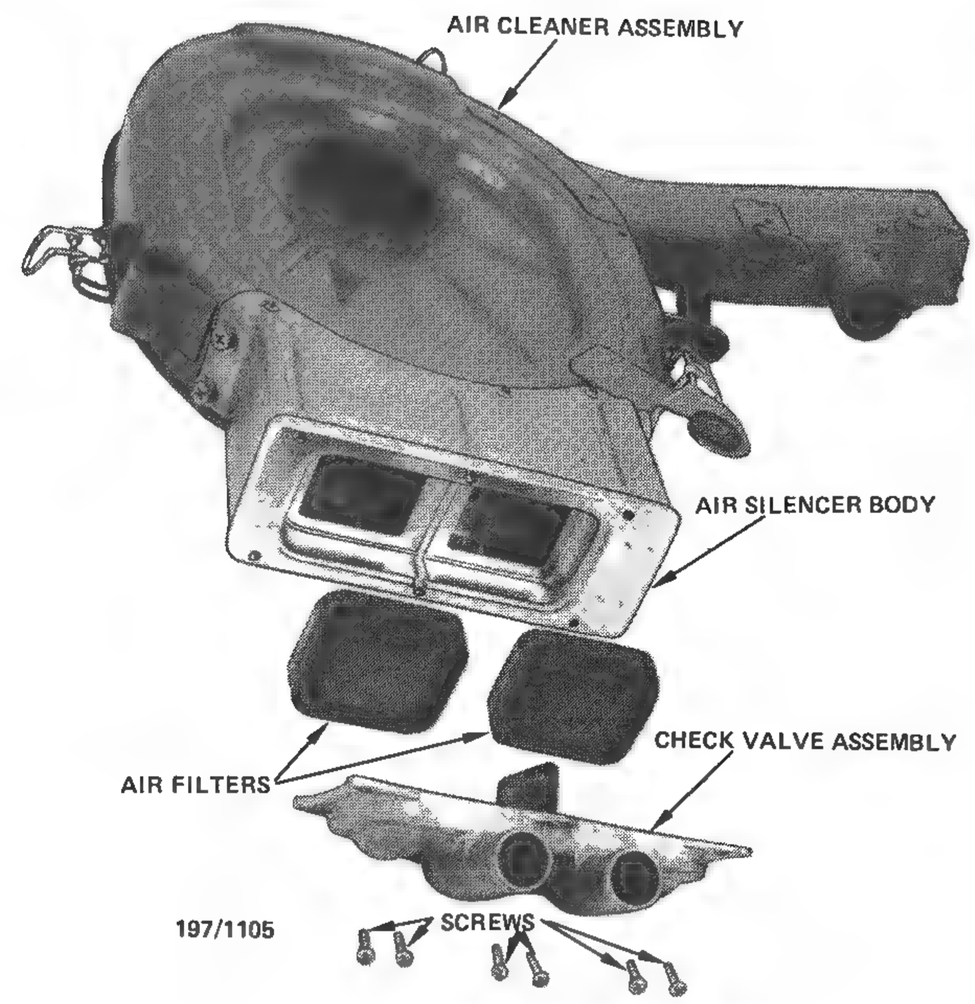

Dismantled view of the air silencers and check valves for the air injection system.

TO REMOVE AND INSTAL

(1) Raise the engine bonnet and fit fender covers to both front fenders.

(2) Remove the retaining nut and bolts from the rocker box cover.

(3) Mark and disconnect the hoses from the rocker box cover and the charcoal canister.

(4) Disconnect the air injection system hoses from the air silencers on the side of the air cleaner main body.

(5) Remove the wing nut and sealing washer from the centre of the air cleaner assembly and lift the air cleaner assembly from the carburettor. Collect the hot air hose from the manifold and air cleaner connections.

(6) Remove the air cleaner top cover and remove the paper element from the main body.

Installation is a reversal of the removal procedure with attention to the following points:

(1) Inspect and if necessary renew the main body and top cover rubber seals.

(2) Instal the air cleaner element centrally to the air cleaner main body and instal the main body to the carburettor. Ensure that the hot air hose is aligned with the air intake spout.

(3) Instal the top cover to the air cleaner body, fit the sealing washer and securely tighten the wing nut.

(4) Instal and securely tighten the air cleaner retaining nut and bolts. Connect the hose from the rocker cover to the main body of the air cleaner.

(5) Connect the hoses from the charcoal canister and the air injection system to the air cleaner.

BRAKES

SPECIFICATIONS

Master cylinder:

Make	Girlock
Design	Dual circuit hydraulic
Type	UCXV (FF)
Primary piston diameter	Stepped, 29.00 and 20.64 mm
Secondary piston diameter	20.64 mm

Vacuum servo unit:

Make	Girlock
Type	LPC 50
Servo to pedal clevis	130.0 mm

TORQUE WRENCH SETTINGS

Access port plugs:

Pressure differential piston	12 Nm
Proportioning valves	27 Nm

1. DESCRIPTION

The brakes are operated by hydraulic pressure from two independent circuits by means of a tandem dual circuit master cylinder coupled to a light weight vacuum servo unit mounted on the bulkhead between the brake pedal and master cylinder.

The brake circuits are split diagonally, the left hand front and the right hand rear brakes are connected in one circuit, whilst the right hand front and left hand rear brakes are connected in the other circuit.

Should a malfunction occur in one circuit, the remaining circuit is capable of stopping the vehicle.

Pressure differences between each brake circuit, are sensed by a pressure differential piston which operates a sensing switch in a warning light circuit by its movement.

During operation of the brakes, a pressure proportioning valve in each circuit is designed to prevent premature locking of the rear wheels during severe braking.

The hydraulically operated wheel brakes incorporate leading and trailing brake shoes on each rear wheel and disc brakes on each front wheel.

2. MASTER CYLINDER

Special Equipment Required:

To Instal New Seals - Machined aluminium or hard plastic drift

TO REMOVE

(1) Raise the engine bonnet and fit fender covers over both front fenders.

(2) Disconnect the pressure differential sensing switch at the electrical connector.

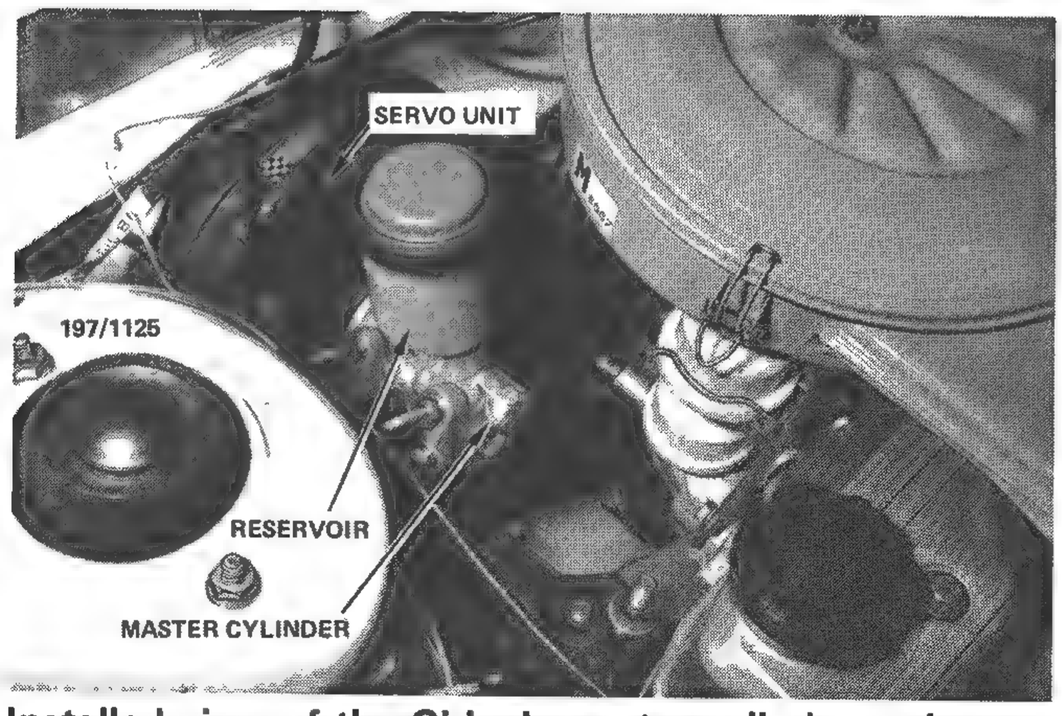

Installed view of the Girlock master cylinder and servo unit.

(3) Disconnect the brake fluid pipes from the outlets on the master cylinder and plug all pipes and unions to prevent ingress of dirt and leakage of fluid.

(4) Remove the nuts securing the brake master cylinder assembly to the brake servo unit and remove the master cylinder assembly from the vehicle.

NOTE: Care should be exercised when removing or installing the master cylinder assembly to ensure that brake fluid is not permitted to drop onto the surrounding paintwork of the vehicle. Brake fluid, if accidently spilt, should be immediately washed away with water then allowed to dry naturally and not wiped with a cloth.

TO INSTAL

Installation is a reversal of the removal procedure with attention to the following points:

(1) Pour a small amount of clean brake fluid into the reservoir and pump the master cylinder pistons with a blunt rod until fluid begins to emerge from the outlet ports.

(2) Cover painted areas of the bodywork below the mounting location of the master cylinder with absorbent cloths to collect any brake fluid spillage.

Instal the master cylinder to the brake servo unit, but do not fully tighten the retaining nuts at this stage.

(3) Remove the plugs preventing fluid loss and dirt ingress from the brake pipes and connect the pipes to the master cylinder.

(4) Securely tighten the nuts retaining the master cylinder to the brake servo unit.

(5) Securely tighten the brake pipe unions and connect the pressure differential sensing switch.

(6) Fill the master cylinder reservoir with clean hydraulic brake fluid and bleed the brakes as described under the heading Hydraulic System - To Bleed.

TO DISMANTLE

(1) With the master cylinder removed from the vehicle as previously described, remove the reservoir cap and diaphragm.

(2) Drain residual brake fluid from the reservoir and discard it, remove the reservoir from the master cylinder by carefully pulling it from the retainers. Remove the retainers from the master cylinder.

(3) Using a suitable tool remove the snap ring from the primary reservoir port (nearest to the mounting flange), remove the fast fill valve assembly and remove the 'O' ring from the port. Remove the valve washer from the fast fill valve.

(4) Remove the proportioning valve end plugs with their 'O' ring, also remove the internal 'O' rings from the end plugs.

(5) Withdraw the proportioning valve plungers and springs. Remove the valve seals from the plungers.

(6) Remove the pressure differential sensing switch by unscrewing it from the master cylinder body and remove the switch operating lever from the sensing switch port.

(7) Remove the cylinder end plug from the master cylinder body and remove the 'O' ring from the plug. By carefully tapping the end of the cylinder vertically on a block of wood, remove the two pressure differential pistons from the master cylinder body. Remove the 'O' rings from the pistons.

(8) Push the primary piston forward into the cylinder with a blunt rod and hold the preload whilst removing the stop pin.

(9) The primary piston may now be withdrawn from the cylinder bore. The secondary piston may also be withdrawn by carefully tapping the rear end of the cylinder vertically on a block of wood. Remove the secondary spring retainer and spring from the cylinder.

(10) To remove the main seal from the primary piston, prise the legs of the seal retainer upwards and remove it from the piston. Remove the main seal and the recuperation guide.

NOTE: The secondary piston must not be dismantled by removing the screw. This assembly has a factory preset length and the self tapping screw must not be altered in service.

(11) Remove the main seal and the recuperation guide from the front of the secondary piston. The rear 'L' type seal may now be removed by stretching it from its groove and over the piston. Take care not to damage the piston surfaces where the inner diameter of the piston seals locate.

(12) Using a suitable blunt edged tool remove both fast fill seals from the master cylinder bore by carefully prising them from their grooves and hooking them from the cylinder.

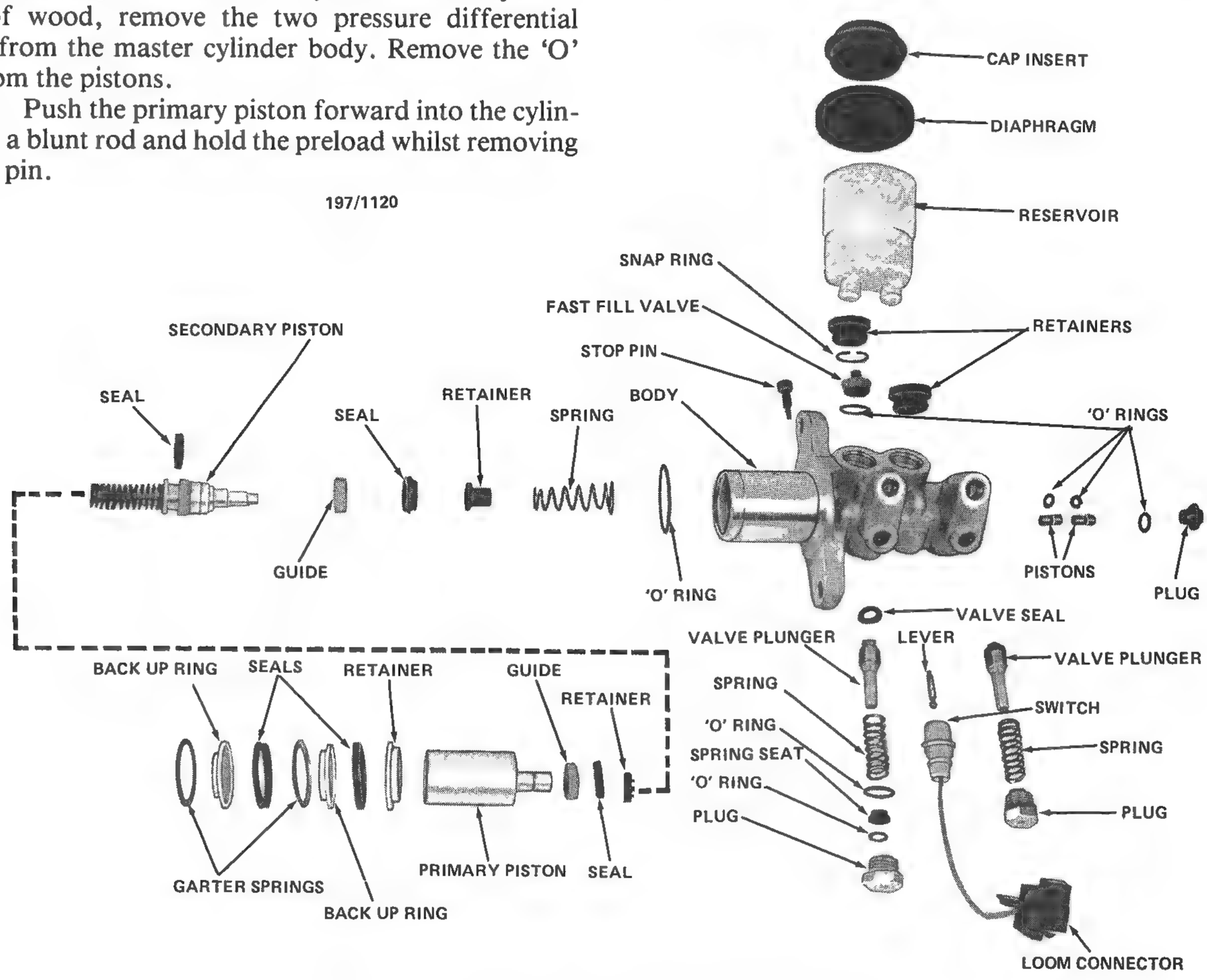

Dismantled view of the Girlock master cylinder.

NOTE: It is of paramount importance that the bore surfaces where the fast fill seals are located are not damaged during the removal of the seals.

(13) Remove the garter springs, back up rings and the retainer from the cylinder.

(14) Remove the external 'O' ring from the master cylinder body.

TO CLEAN AND INSPECT

(1) Wash all the components thoroughly in methylated spirits. Do not use petrol, kerosene or other cleaning solvents.

(2) Inspect the master cylinder bore for wear, scoring or pitting.

NOTE: Do not hone the master cylinder bore if the bore is pitted or worn, renew the master cylinder as an assembly.

(3) Ensure that all inlet and compensating ports between the reservoir and the cylinder bore are free from any obstruction.

(4) Discard all rubber seals, 'O' rings and damaged piston assemblies.

NOTE: Where possible, use a geniune major repair kit which contains pre-assembled rubber seals and pistons when overhauling a master cylinder. The use of a major kit will ensure a thorough overhaul and a long service life from the unit.

TO ASSEMBLE

Assembly is a reversal of the dismantling procedure with attention to the following points:

(1) Liberally coat the cylinder bore and all internal parts with clean brake fluid.

NOTE: Instal all the parts supplied with the repair kit.

(2) Instal the seal retainer in the mouth of the master cylinder bore small diameter first.

(3) Instal the first fast fill seal, lip first against the seal retainer, followed by the first back up ring with the large diameter first.

(4) Instal the garter spring against the rear face of the back up ring and using the machined drift, lightly tap the drift with a hammer to press the garter spring forward into its locating groove.

NOTE: In order to instal and locate the garter springs correctly, it is essential that a machined drift of hard plastic or aluminium as shown in the sketch should be used.

(5) Instal the second fast fill seal, lip first against the garter spring already installed in the cylinder bore. Instal the second back up ring large diameter first.

(6) Instal the second garter spring and using the machined drift, lightly tap the drift with a hammer to press the garter spring forward into its locating groove.

(7) Smear the secondary piston with clean brake fluid, ease the 'L' type seal over the piston body into the groove adjacent to the spring, ensuring that the seal lip faces the spring and that the nylon spacer is against the back of the seal.

(8) Instal the recuperation guide onto the secondary piston, large internal diameter first, followed by the main seal with the lip facing forward.

(9) Lubricate the secondary piston assembly with clean brake fluid and instal the secondary spring and retainer to the piston. Instal the complete assembly into the master cylinder bore.

(10) Smear the primary piston with clean brake fluid, instal the recuperation guide large internal diameter first, followed by the main seal with the lip facing towards the front end of the piston.

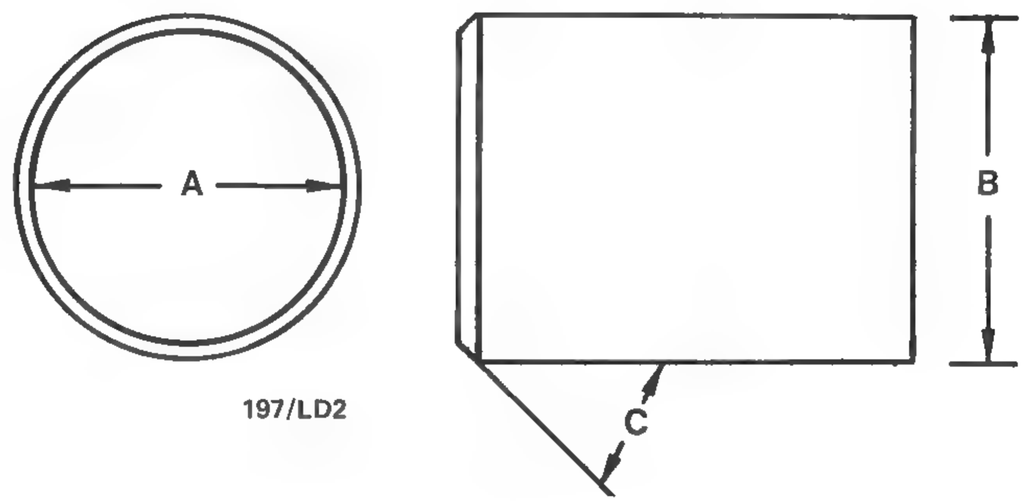

Diagram of special tool for installing the garter springs. Dimensions A = 31.5mm dia, B = 34.5mm dia, and C = 45°.

(11) Instal the retainer to the spigot on the front end of the primary piston ensuring that the petals of the retainer engage with the register groove on the piston.

(12) Lubricate the primary piston assembly with clean brake fluid and instal the assembly into the master cylinder bore. With a blunt rod, push the assembly down the bore sufficiently to preload the pistons, instal the stop pin and tighten securely.

(13) Instal a new 'O' ring to the groove on the boss of the mounting flange of the master cylinder.

(14) Instal new 'O' rings to the two pressure differential pistons, smear them with clean brake fluid and instal them into the master cylinder body.

(15) Instal a new 'O' ring to the pressure differential cylinder plug, instal the plug to the master cylinder body and tighten to Specifications.

(16) Using a blunt probe through the sensing switch location hole, separate the pressure differential pistons and instal the switch actuating lever between them.

(17) Screw the sensing switch into its locating hole until the detents on the switch body just contact the locating hole facing (with the radial grooves). Screw the switch assembly in a further half, to one full turn ensuring that the detents locate in the grooves.

(18) Instal new valve seals to the proportioning valve

plungers, with the serrations of the seals facing away from the hexagons of the plungers.

(19) Instal new 'O' rings to both the insides and outsides, of the proportioning valve chamber plugs.

(20) Instal the valve springs over the stems of the proportioning valves, insert the valve assemblies into the master cylinder body and instal the valve chamber plugs and tighten them to Specifications.

(21) Instal a new 'O' ring to the base of the fast fill valve assembly, instal a new valve washer to the base of the valve.

(22) Instal the fast fill valve assembly in the primary feed port (nearest to the mounting flange of the master cylinder) and instal the snap ring to retain the assembly. Ensure that the snap ring is correctly seated in the groove.

(23) Smear the new reservoir retaining grommets with new brake fluid and instal them into the reservoir ports. Carefully press the brake fluid reservoir into position, ensuring that the outlet extensions are fully home in the retaining grommets.

(24) Instal the reservoir cap insert to the diaphragm and press the cap assembly onto the reservoir.

(25) Instal the master cylinder to the vehicle as previously described and bleed the brake system as detailed in the Hydraulic System - To Bleed.

3. BRAKE SERVO UNIT

TO REMOVE AND INSTAL

(1) Raise the bonnet and fit fender covers to both front fenders.

(2) Remove the air cleaner assembly as previously described under the Air Cleaner heading.

(3) Remove the master cylinder as previously described under the Master Cylinder heading.

(4) Working inside the vehicle remove the split pin and clevis pin from the brake pedal lever to disconnect the servo actuating rod.

(5) Remove the nuts retaining the servo unit to the bulkhead.

(6) Working in the engine compartment loosen the hose clip and disconnect the vacuum supply hose from the servo unit.

(7) Remove the servo unit from the vehicle.

Installation is a reversal of the removal procedure with attention to the following points:

(1) Prior to installing the servo unit to the vehicle, check and if necessary adjust the servo to brake pedal actuating rod length. Refer to the illustration for the measuring points and to Specifications for the dimension A.

NOTE: The dimension A is measured from the mounting face of the servo unit assembly to the centre of the clevis pin hole.

No attempt should be made to adjust the length of the servo to master cylinder output rod, its length is set during manufacture and, should not be altered during service life.

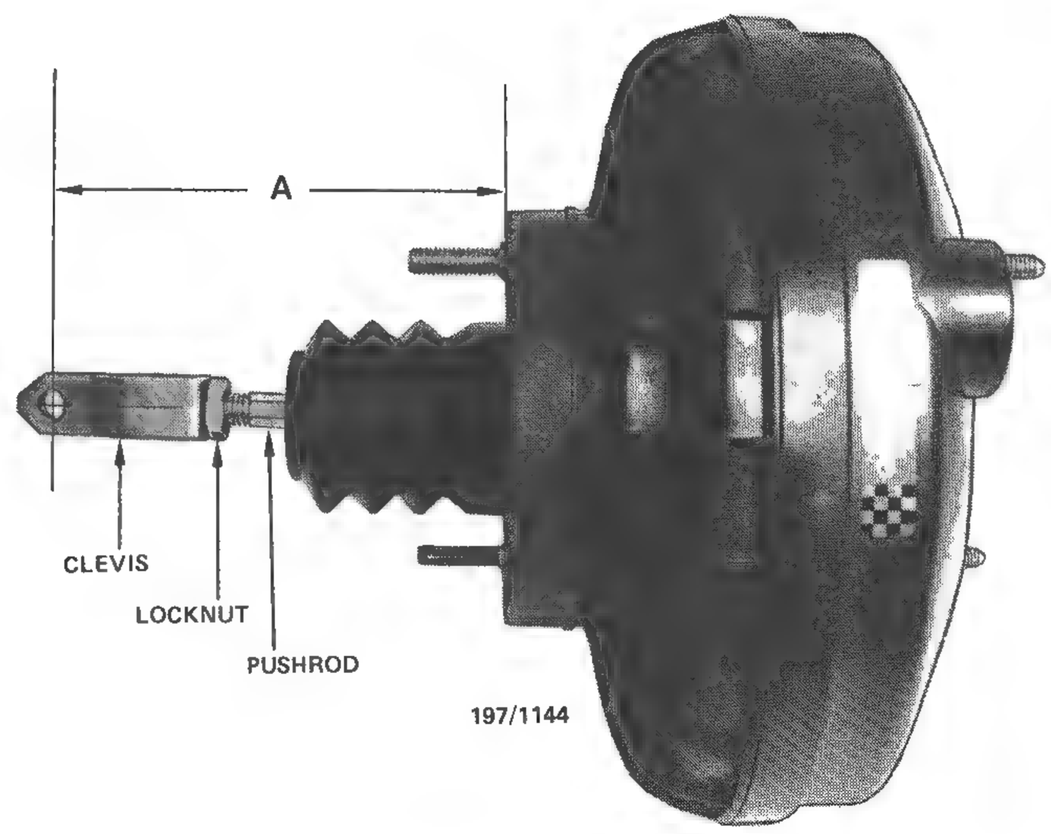

View of the Girlock servo unit removed from the vehicles.

ELECTRICAL SYSTEM

CAUTION: To prevent severe electrical shock extreme care must be taken when working on or near the electronic ignition system as dangerous high tension voltages are produced in both the primary and secondary circuits. See text for precautionary notes.

SPECIFICATIONS

STARTER MOTOR

Make	Bosch
Type	12 volt solenoid operated
Drive type	Pre-engaged pinion with clutch
Number of brushes	4
Brush length minimum	13.0 mm
Armature shaft end play	0.05 – 0.3 mm

DISTRIBUTOR

Make	Mitsubishi
Rotation of rotor	Anti-clockwise
Type	Breakerless electronic
Control	Vacuum and centrifugal advance

NOTE: For further Specifications with regard to the ignition system refer to the Engine Tune Up data within this supplement.

1. STARTER MOTOR

DESCRIPTION

The starter motor is the induced pole type with four brushes and four pole shoes with field coils.

A solenoid switch is attached to the starter drive end bracket. The solenoid plunger is connected to the overrunning clutch and drive pinion through a lever and pivot arrangement.

When the solenoid windings are energised, the plunger acting on the lever and pivot, engages the drive pinion with the flywheel ring gear at the same time closing the switch supplying power from the positive side of the battery to the starter motor field coils and armature to operate the motor.

As the engine fires, the over-running clutch of the drive pinion assembly prevents high speed rotation of, and possible damage to the starter armature if the solenoid winding is not immediately de-energised by releasing the switch key.

The starter solenoid switch winding is energised by the key operated combination ignition and starter switch.

TO REMOVE AND INSTAL

(1) Raise the engine bonnet and fit fender covers to both front fenders.

(2) Disconnect the negative battery lead.

(3) Disconnect the wiring from the solenoid.

(4) Remove the starter motor retaining bolts and manoeuvre the starter motor from the engine compartment.

Installation is a reversal of the removal procedure.

TO DISMANTLE

(1) Mount the starter motor in a vice after removing it from the vehicle as previously described.

(2) Disconnect the field connector strap from the lower terminal on the solenoid switch.

(3) Remove the solenoid retaining screws from the drive end bracket. Withdraw the solenoid from the drive end bracket a short distance then lift the solenoid plunger off the top of the pinion engaging fork.

(4) Remove the cap retaining screws and remove the cap and seal from the commutator end cover.

(5) Remove the 'C' clip and thrust washers from the end of the armature shaft, noting the number of washers installed.

(6) Remove the through bolts and separate the commutator end cover from the yoke.

(7) Withdraw the yoke and field coil assembly together with the brush holder and brushes from the armature and drive end bracket.

(8) Remove the sealing block from the drive end bracket and withdraw the armature and the pinion engaging fork from the drive end bracket.

(9) Carefully spread the pinion fork arms and disconnect the pinion fork arms from the drive pinion dowels. Remove the pinion fork.

(10) Support the armature in a vertical position with the drive pinion uppermost.

(11) Using a suitable drift, tap the stop collar towards the drive pinion and clutch assembly and remove the circlip from the armature shaft.

(12) Remove any burrs from the shaft and withdraw the stop collar and the drive pinion and clutch assembly from the armature shaft.

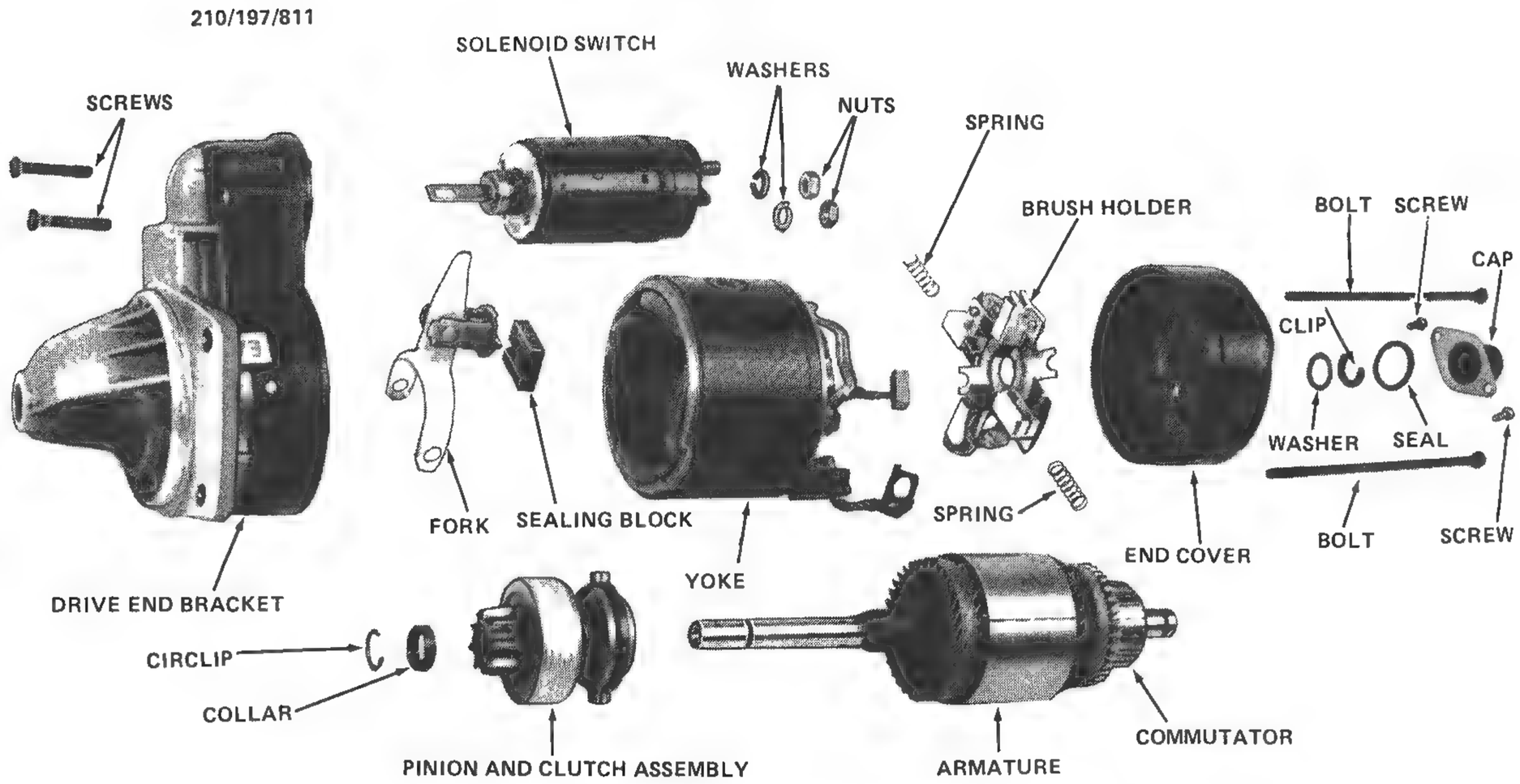

Dismantled view of the Bosch starter motor.

(13) Clean all parts thoroughly but do not immerse the yoke, armature or drive clutch in cleaning solvent.

(14) If the field coils are to be removed mark the location of each individual pole shoe before removing the mounting screws.

NOTE: Do not remove the field coils unless they are suspected of being unserviceable. The pole shoes must be replaced in the same position from which they were removed to avoid the possibility of the armature poling when the starter motor is assembled.

TO ASSEMBLE

Assembly is a reversal of the dismantling procedure with attention to the following points:

(1) Lubricate the helix on the armature shaft lightly with molybdenum disulphide grease and fit the drive pinion and clutch assembly to the armature shaft.

(2) Fit the stop collar and circlip, slide the stop collar over the circlip to lock the clip in position.

(3) Lubricate the bearings in both end brackets sparingly with engine oil.

(4) Position the armature together with the engaging lever into the drive end bracket and fit the dust seal to the drive end bracket.

(5) Engage the solenoid switch and lever and instal the solenoid with the battery (longer) terminal at the rear uppermost. Secure the solenoid with the retaining screws.

(6) Fit the yoke over the armature and the brush holder and brushes over the commutator.

To instal the brush holder with brushes fitted it is necessary to push the brushes against the spring tension into the holder and then slide the assembly onto the commutator.

NOTE: When new brushes are installed, place the brush holder over the commutator, insert the brushes and springs and then bend over the brush spring retaining lugs.

(7) Fit the commutator end cover and the two through bolts. Ensure that the field connector strap and insulator are seated correctly.

(8) Instal the thrust washers to the end of the armature shaft and secure them with the 'C' clip. Adjust the armature end-float by adding or subtracting thrust washers. Refer to Specifications.

(9) Place the bearing cap and gasket over the armature shaft and instal the retaining screws.

Instal both screws loosely before tightening.

(10) Connect the field connector strap to the lower terminal on the solenoid switch and tighten the nut.

2. LAMP UNITS

FRONT COMBINATION LAMP

To Renew Bulbs

(1) Remove the lens retaining screws and remove the lens.

(2) To remove the turn signal bulb, push the bulb inwards and turn in an anticlock-wise direction to remove it.

(3) To remove the park lamp bulb, grip the bulb firmly and pull it from its location.

Installations are reversals of the removal procedure.

To Remove and Instal

(1) Remove the lens as previously described.

(2) Remove the lamp body retaining screws.

(3) Working inside the engine compartment disconnect the wiring connector at the rear of the lamp unit and remove the lamp unit from the vehicle.

Installation is a reversal of the removal procedure.

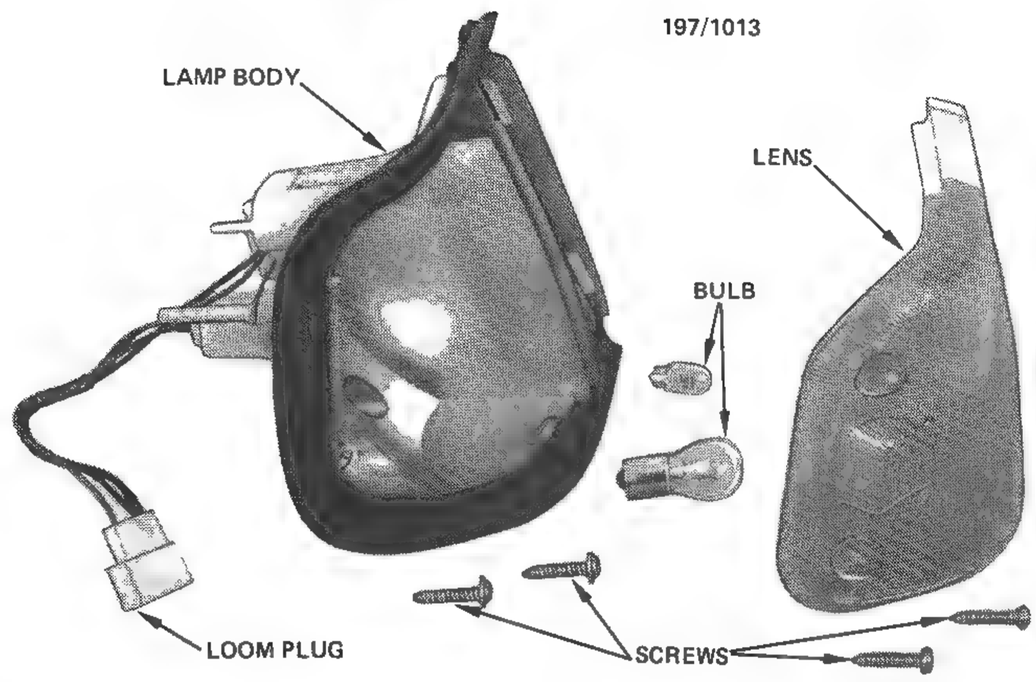

Dismantled view of front turn signal and parking lamp assembly.

HEADLAMP

To Renew Bulb

(1) Working inside the engine compartment, disconnect the wiring connector on the back of the headlamp.

(2) Detach the dust seal from the base of the bulb.

(3) Release the bulb retaining clip and hinge it away from the bulb.

(4) Withdraw the halogen bulb from the headlamp.

Installation is a reversal of the removal procedure with attention to the following points:

(1) Ensure that the bulb contacts are clean and that the bulb is of the correct wattage and voltage.

(2) When installing the dust seal to the lamp, ensure that the portion marked 'TOP' is correctly located.

NOTE: Do not touch the halogen bulb with bare fingers. If accidentally touched, clean the bulb with alcohol and allow it to completely dry before installing.

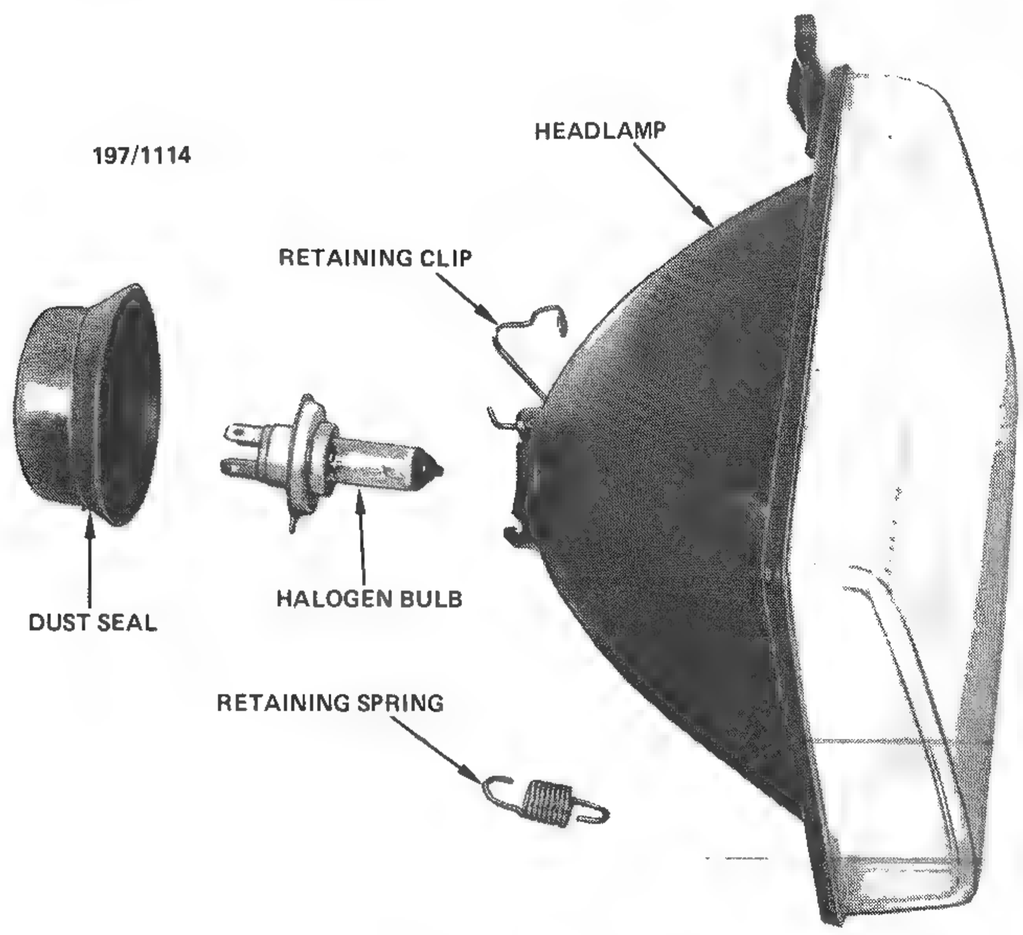

Dismantled view of headlamp.

To Remove and Instal the Headlamp Unit

(1) Release the front grille retaining clips and remove the grille.

(2) Remove the front combination lamp as previously described.

(3) Using long nose pliers, remove the retaining spring adjacent to the upper outer pivot pillar retaining screw of the lamp unit.

(4) Push the lamp unit inwards towards the vehicle and carefully manoeuvre it towards the vacant combination lamp location to detach it from the vehicle.

NOTE: If care is exercised during the removal of the lamp unit the lamp adjustment will not be altered.

Installation is a reversal of the removal procedure with attention to the following points:

(1) Ensure that the retention lugs on the lamp unit are fully and correctly engaged with the retaining and adjusting screws before installing the retaining spring.

(2) Check the headlamp adjustment as previously described in the main manual under the heading To Adjust Headlamps.

View of the headlamp with radiator grille and front turn signal lamp assembly removed.

REAR COMBINATION LAMP

To Renew Bulbs

(1) Raise the tailgate and working in the luggage compartment, remove the spare wheel cover board from the vehicle.

(2) Remove the rear trim panel retaining studs and remove the rear trim panel from the vehicle.

NOTE: To remove the trim panel retaining studs, it is necessary to remove the central locking screw from each of the studs before prising them from their locations.

(3) Remove the bulb holder panel by turning the retaining catch half a turn and withdrawing it from the lamp unit.

(4) Remove the faulty bulb by pushing it inwards and simultaneously twisting in an anti-clockwise direction.

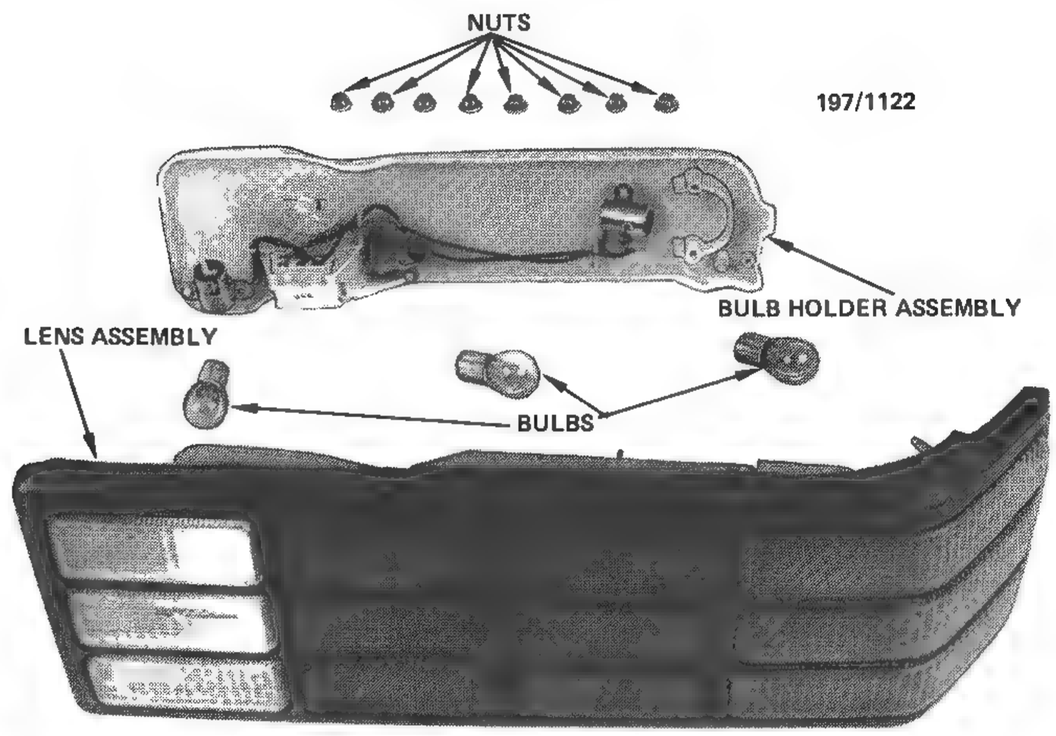

Dismantled view of the rear combination lamp assembly.

Installation is a reversal of the removal procedure, ensuring that the bulb contacts are clean and the correct wattage and voltage bulb is installed.

To Remove and Instal

(1) Raise the tailgate and working inside the luggage compartment remove the trim panels as previously described.

(2) Hinge over the floor mounted trim flap (to release the side trim panel) adjacent to the lamp unit being removed.

(3) Disconnect the electrical wiring plug connector on the rear of the lamp unit.

(4) Remove the retaining nuts from the rear of the combination lamp and remove the lamp unit from the vehicle.

Installation is a reversal of the removal procedure.

3. SOLID STATE IGNITION SYSTEM

DESCRIPTION

The solid state ignition system consists of the distributor, control unit, pulse generator, ignition coil and associated wiring.

The distributor is basically the same as that in conventional ignition systems. The difference lies in the fact that the capacitor and breaker points are not used. These are replaced by a pulse generator which consists of a reluctor, which rotates with the distributor shaft, and a stator and pick up coil which are mounted on the distributor base plate. As there is no contact between the moving parts of the pulse generator, the system is virtually maintenance free. Ignition advance is achieved by the same methods used in the conventional distributor, i.e. centrifugal weights and a vacuum advance unit.

The control unit is a sealed non-adjustable electronic component which determines the period during which current will flow in the primary circuit, or in other words the dwell angle. The control unit also interrupts the primary circuit when triggered by impulses from the pulse generator. This induces high current to flow in the secondary circuit. Dwell angle is non adjustable in solid state ignition systems and can only be measured by an oscilliscope.

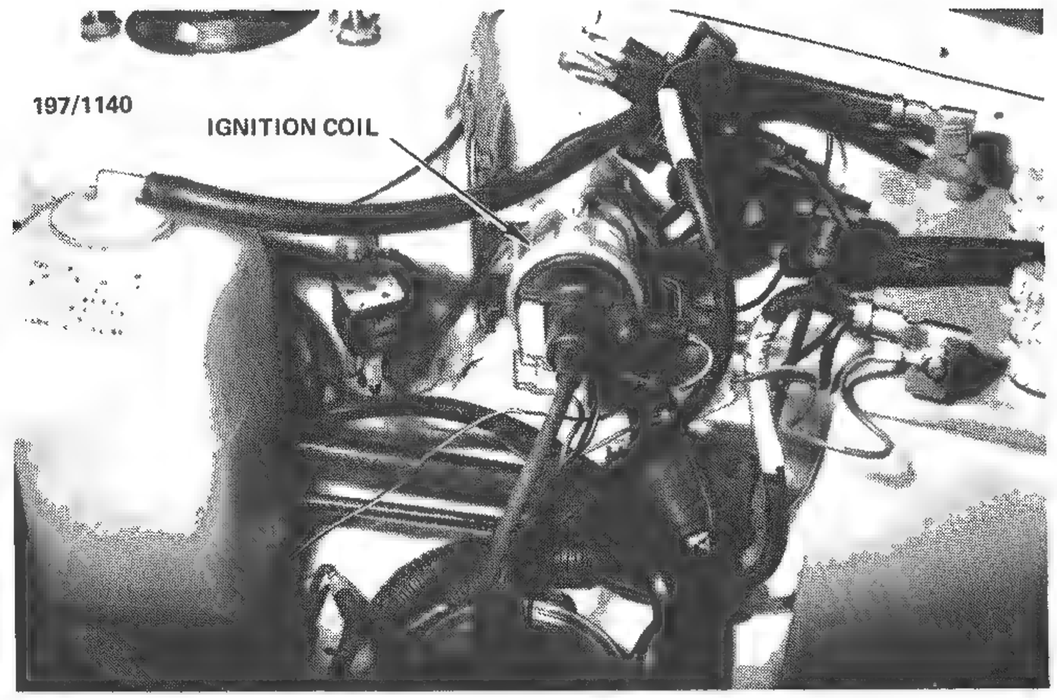

Installed view of the high energy ignition coil.

The ignition coil is specially designed to suit solid state ignition systems and should not be replaced by a conventional unit. Some types of tachometers and timing lights are unsuited to solid state ignition systems. Always ensure that suitable testing equipment is used.

ELECTRICAL CHECKS

NOTE: Solid state ignition systems can produce dangerous high tension voltages in both the primary and secondary circuits. For this reason extreme care must be taken when carrying out these checks. When disconnecting the wiring plug from the engine wiring harness ensure that the ignition switch is in the OFF position. This will prevent damage to the solid state circuitry in the control unit.

Should engine problems arise and the ignition system be suspect, first ensure the ignition system components are clean and dry, and all terminals are secure. Ensure the battery is fully charged and the ignition timing is correctly set.

If after checking the previous points the engine will not start carry out the following tests:

NOTE: At the conclusion of each check ensure the ignition is switched OFF.

(1) Visually check the coil for oil leakage. If the coil is leaking it must be replaced with a new unit of the correct type.

(2) Remove a spark plug lead and insert a split pin into the lead to extend the terminal. Using insulated pliers hold the lead 6 mm away from a good earth on the engine or alternatively open the gap of an old spark plug to approximately 6 mm and securely earth the body of the plug.

(3) Have a second operator crank the engine. If no spark is evident proceed with the following tests:

(4) Remove the coil high tension lead, from the distributor cap and using insulated pliers hold the lead 6 mm from a good earth on the engine or use an old spark plug as previously described.

Have a second operator crank the engine and check for a spark. If a strong high tension spark is evident then the fault probably lies in the distributor cap, rotor arm or spark plug leads. Carefully inspect these components for cracks or loose terminals.

(5) Check the leads connecting the control unit and the pick up coil with an ohmmeter. Resistance from the leads to earth should be infinite.

(6) Visually check the pulse generator for damage. Check that there is an air gap between the reluctor and the stator. Renew any damaged parts.

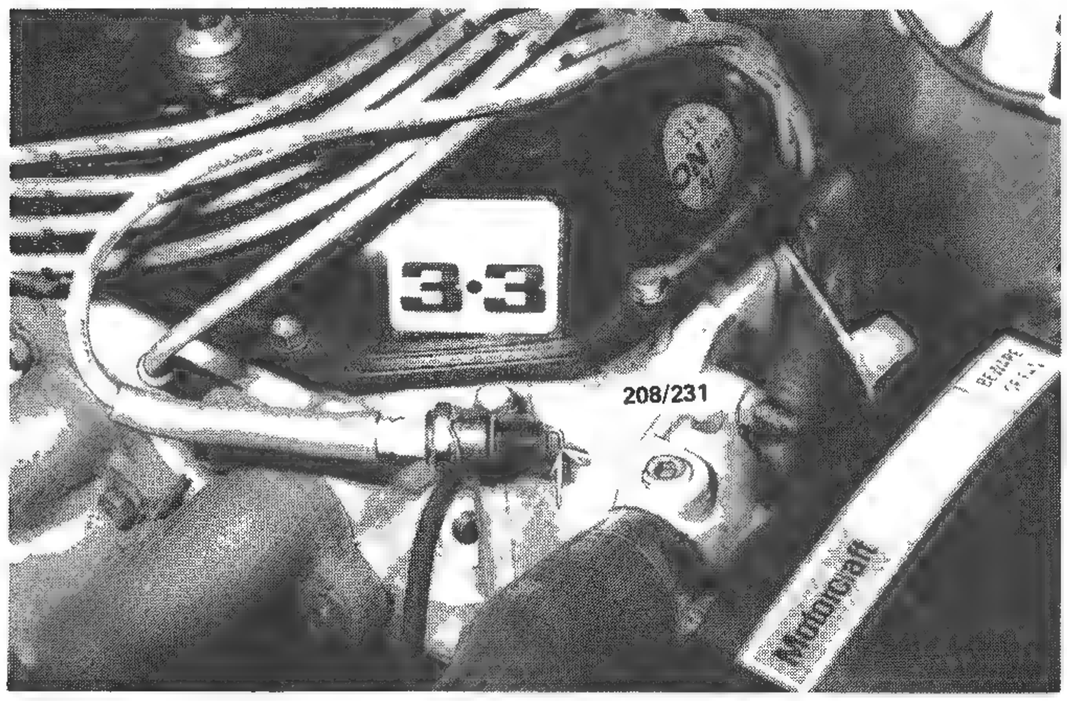

Securely earth the body of a test spark plug to check for sparks at the spark plug leads and the coil lead. Typical.

(7) If after all these tests have been carried out the engine still refuses to start or lacks power then a mechanical defect must exist elsewhere in the vehicle.

NOTE: Specialised testing equipment is required to fully check the serviceability of solid state ignition systems. If the checks provided do not resolve the problem, consult your local authorised dealership who will have the specialised testing equipment and will perform the tests for you.

DISTRIBUTOR

To Remove and Instal

(1) Remove the retaining screws from the distributor cap and remove it from the distributor body.

(2) Disconnect the connector plug from the engine wiring harness and disconnect the low tension wire to the ignition coil at the coil.

(3) Remove the distributor rotor by releasing the retaining screws.

(4) To assist with the installation of the distributor to its original timing setting, scribe an alignment mark on the clamping lug and the cylinder head.

(5) Remove the distributor retaining bolt from the clamping lug and withdraw the distributor assembly from the cylinder head.

NOTE: The distributor driving dog is offset from the centre of the distributor shaft. This facilitates assembly to the engine as the driving dog will only engage in one position and the distributor rotor will be correctly aligned.

Installation is a reversal of the removal procedure with attention to the following points:

(1) Ensure that the 'O' ring on the distributor body is serviceable.

(2) Align the mark on the distributor clamping lug with the mark on the cylinder head scribed during removal.

To Dismantle

(1) Remove the distributor from the vehicle as previously described.

(2) Remove the rotor retaining screws and remove the rotor from the distributor.

(3) Remove the bolt retaining the centrifugal advance and reluctor assembly to the driveshaft, remove the assembly from the distributor. Ensure that the spacer washer is removed from the drive shaft.

NOTE: Observe the locations of the different size centrifugal weight springs.

(4) Remove the retaining screws from the transistorised module and remove it from the distributor body.

(5) Remove the vacuum advance control unit retaining screws, detach the connecting link from the breaker unit assembly and remove the vacuum control unit from the distributor body.

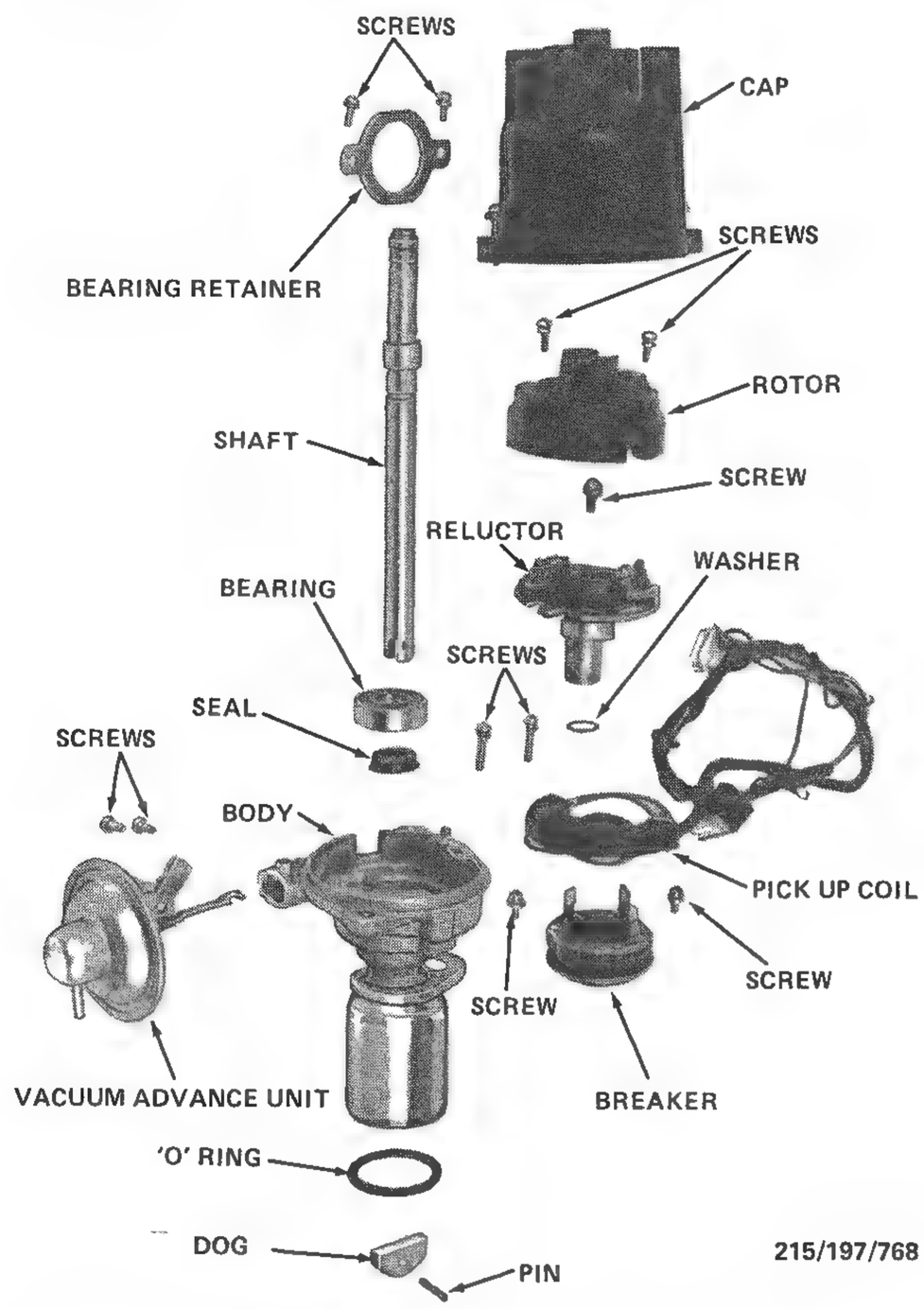

Dismantled view of the distributor components.

(6) Remove the breaker unit retaining screws and remove the breaker unit from the distributor body.

(7) Remove the suppressor retaining screw from the distributor body and remove the suppressor from the distributor body.

(8) Using a suitable sized parallel pin punch, drive the retaining roll pin from the drive dog and remove the drive dog from the shaft.

(9) Remove the bearing retaining plate screws and remove the retaining plate from the distributor body.

(10) Using a soft faced hammer and ensuring that the distributor body is correctly supported, gently tap the drive shaft and its support bearing from the distributor body.

To Clean and Inspect

(1) Wash all parts in cleaning solvent except the permanent magnet, pick up coil and wiring and the vacuum advance unit, these components may be wiped clean using a lint free cloth.

(2) Inspect the oil control seal in the distributor body. Renew the seal if it is worn or damaged or if there was evidence of excessive oil in the distributor body.

(3) Inspect the drive shaft ball bearing and renew the bearing if it is worn or damaged.

NOTE: The distributor drive shaft runs in a bush formed by the distributor body at the lower end. If excessive wear is found the distributor body and/or the drive shaft will require renewing.

(4) Test the vacuum control unit by pressing on the link to force the diaphragm into its chamber, hold a finger over the pipe connection and observe that the link does not move. Should the link move out of the control unit it will indicate a leaking diaphragm in which case a new control unit will have to be fitted.

(5) Check the advance contol springs for stretch and distortion, check against new springs and renew if required.

(6) Using an ohmmeter check that the pick up coil has not open circuited.

(7) Check that the teeth or poles of the reluctor and core are not damaged, this can be caused by the air gap being incorrect. Rough edges are a normal characteristic of the reluctor teeth or poles.

NOTE: Never file or dress the teeth or poles of the reluctor or core, a sharp edge must be present at all times on these units to obtain an instant break off of the magnetic field for the maximum inducted voltage to be created in the pick up coil.

(8) Inspect all electrical wiring for fraying or breaks and poor connections to the module. Renew or rework as required.

(9) Ensure that the distributor body is not damaged or cracked and renew as required.

To Assemble

Assembly is a reversal of the dismantling procedure with attention to the following points:

(1) Lubricate the drive shaft in the main body of the distributor with engine oil.

(2) Use high melting point grease on all pivots.

(3) Ensure the centrifugal advance weights are correctly installed.

(4) When replacing the ball bearing supporting the drive shaft use a tubular press tool the same diameter as that of the inner race and press the ball bearing onto the drive shaft. Using a tubular press tool the same diameter as that of the outer race, press the ball bearing with the drive shaft into its location in the distributor body.

NOTE: Ensure that the dog drive end of the shaft is entered into the the distributor body before pressing the ball bearing home in the distributor body.

(5) When installing the driving dog to the distributor shaft a new retaining roll pin should be used.

BODY

1. METEOR LUGGAGE COMPARTMENT LID

TO REMOVE AND INSTAL LID

(1) Open the luggage compartment lid and mark the lid around the hinges with a soft lead pencil to facilitate accurate installation.

(2) With the aid of a second operator support the luggage compartment lid, remove the retaining nuts from the hinges and remove the lid from the vehicle.

Installation is a reversal of the removal procedure, ensuring that the pencil marks made during removal are aligned.

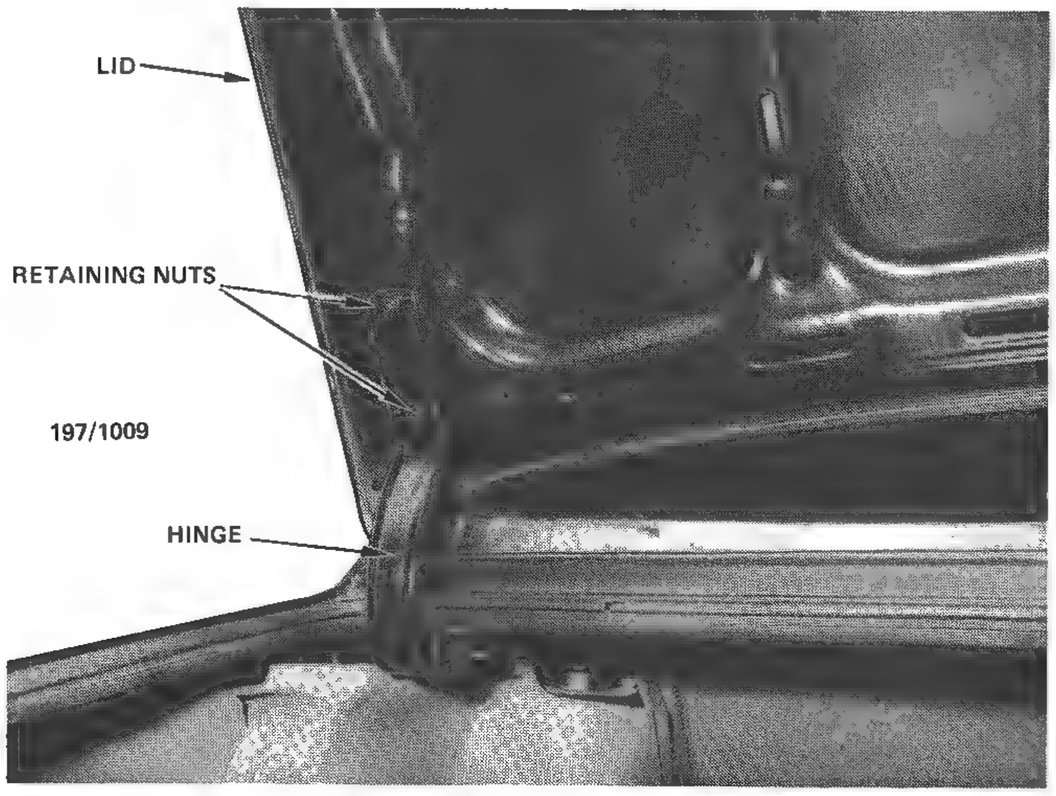

Luggage compartment lid and hinge showing location of retaining/adjusting nuts.

TO ADJUST LID

(1) Loosen the hinge to luggage compartment retaining nuts and retighten them finger tight.

(2) Close the luggage compartment lid and adjusting it by hand, centralise the lid in its opening.

(3) Open the lid carefully and tighten the hinge to compartment lid retaining nuts securely.

(4) Recheck the luggage compartment lid for its position and if necessary, repeat the adjuting procedure.

TO ADJUST LOCK STRIKER PLATE

(1) Loosen the striker plate retaining bolts and retighten them finger tight.

(2) Close the luggage compartment lid and push it firmly shut.

(3) Carefully open the luggage compartment lid without moving the striker plate.

(4) Securely tighten the striker plate retaining bolts, close the luggage compartment lid and check the ease of operation of the lock. Ensure that no free play exists

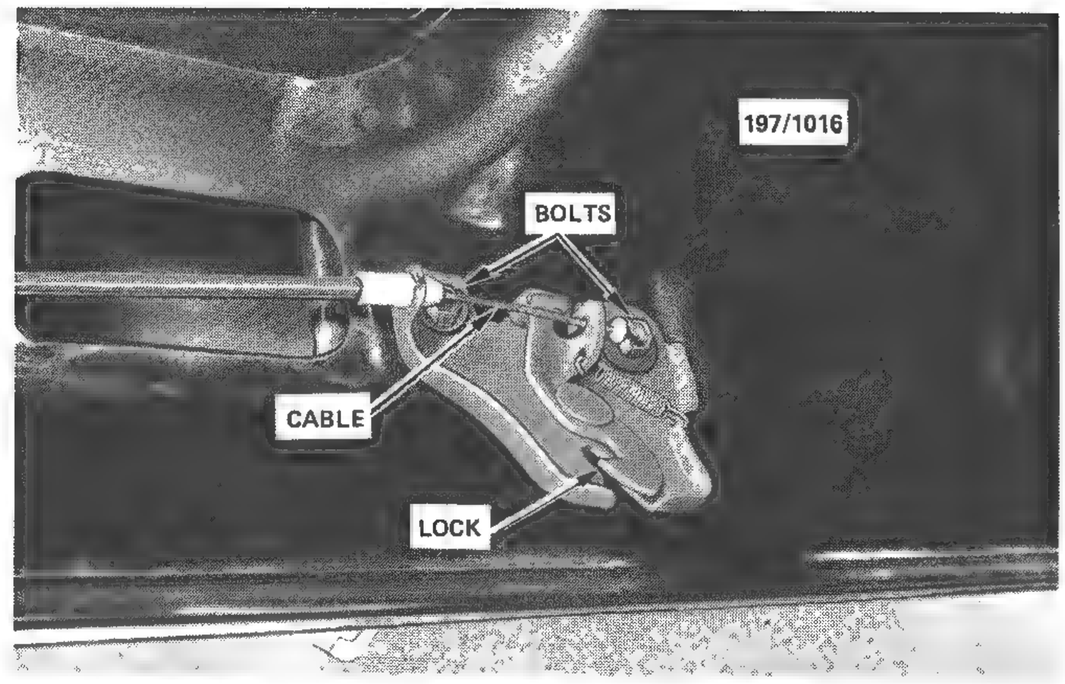

Installed view of the luggage compartment lid lock.

between the luggage compartment lid and the weatherseal, which would allow the entry of water or dust. Readjust the striker plate if necessary.

TO REMOVE AND INSTAL LOCK AND LOCK CYLINDER

(1) Open the luggage compartment lid.

(2) Remove the lock retaining bolts and withdraw the lock from the luggage compartment lid.

(3) Carefully prise the outer sheath of the operating cable from its retaining claw on the lock body and detach the inner cable from the lock operating lever.

(4) Using a suitable tool, prise the retaining clip from the lock cylinder and withdraw the lock cylinder from the luggage compartment lid. Ensure that the rubber weather seal is not lost from the lock cylinder during its removal.

Installation is a reversal of the removal procedure with attention to the following points:

(1) Check the operation of the lock and if required, adjust its position on the luggage compartment lid.

(2) If required, adjust the striker plate as previously described.

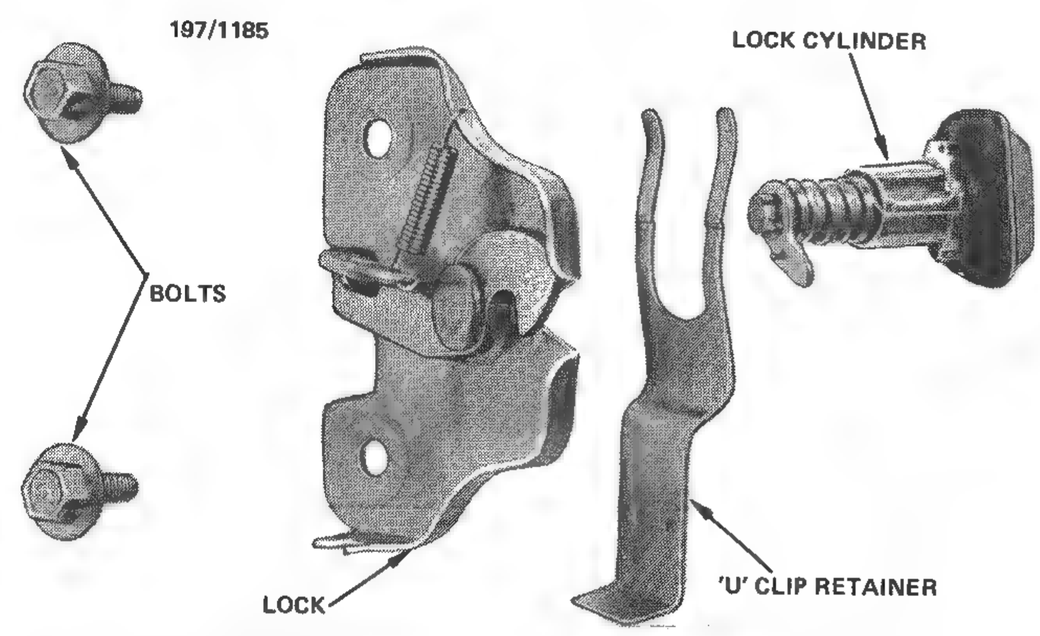

View of luggage compartment lock and lock cylinder removed from lid.

Quantity	Imperial Unit	Metric Unit	Conversion Factors (Approximate): Imperial to Metric Units	Conversion Factors (Approximate): Metric to Imperial Units
LENGTH	inch (in)	millimetre (mm) or centimetre (cm)	1 in = 25·4 mm	1 cm = 0·394 in
	foot (ft)	centimetre or metre (m)	1 ft = 30·5 cm	1 m = 3·28 ft
	yard (yd)	metre (m)	1 yd = 0·914 m	1 m = 1·09 yd
	furlong (fur)	metre (m) or kilometre (km)	1 fur = 201 m	1 km = 4·97 fur
	mile	kilometre (km)	1 mile = 1·61 km	1 km = 0·621 mile
	(for navigation)	international nautical mile (n mile)	1 n mile = 1852 m	
MASS	ounce (oz)	gram (g)	1 oz = 28·3 g	1 g = 0·0353 oz
	pound (lb)	gram (g) or kilogram (kg)	1 lb = 454 g	1 kg = 2·20 lb
	stone	kilogram (kg)	1 stone = 6·35 kg	1 kg = 0·157 stone
	ton	tonne (t)	1 ton = 1·02 t	1 t = 0·984 ton
AREA	square inch (in^2)	square centimetre (cm^2)	1 in^2 = 6·45 cm^2	1 cm^2 = 0·155 in^2
	square foot (ft^2)	square centimetre (cm^2) or square metre (m^2)	1 ft^2 = 929 cm^2	1 m^2 = 10·8 ft^2
	square yard (yd^2)	square metre (m^2)	1 yd^2 = 0·836 m^2	1 m^2 = 1·20 yd^2
	perch (p)	square metre (m^2)	1 p = 25·3 m^2	1 m^2 = 0·0395 p
	rood (rd)	hectare (ha)	1 rd = 0·101 ha	1 ha = 9·88 rd
	acre (ac)	hectare (ha)	1 ac = 0·405 ha	1 ha = 2·47 ac
	square mile	square kilometre (km^2)	1 square mile 2·59 km^2	1 km^2 = 0·386 square mile
VOLUME	cubic inch (in^3)	cubic centimetre (cm^3)	1 in^3 = 16·4 cm^3	1 cm^3 = 0·0610 in^3
	cubic foot (ft^3)	cubic metre (m^3)	1 ft^3 = 0·0283 m^3	1 m^3 = 35·3 ft^3
	cubic yard (yd^3)	cubic metre (m^3)	1 yd^3 = 0·765 m^3	1 m^3 = 1·31 yd^3
	bushel (bus)	cubic metre (m^3)	1 bus = 0·0364 m^3	1 m^3 = 27·5 bus
VOLUME (fluids)	fluid ounce (fl oz)	millilitre (ml)	1 fl oz = 28·4 ml	1 ml = 0·0352 fl oz
	pint (pt)	millilitre (ml) or litre (ℓ)	1 pt = 568 ml	1 litre = 1·76 pt
	gallon (gal)	litre (ℓ) or cubic metre (m^3)	1 gal = 4·55 litre	1 m^3 = 220 gal
	acre foot	cubic metre (m^3) or megalitre (Ml)	1 acre foot = 1230 m^3 = 1·23 Ml	1 Ml = 0·811 acre foot
FORCE	pound-force (lbf)	newton (N)	1 lbf = 4·45 N	1 N = 0·225 lbf
	ton-force (tonf)	kilonewton (kN)	1 tonf = 9·96 kN	1 kN = 0·100 tonf
PRESSURE	pound per square inch (psi)	kilopascal (kPa)	1 psi = 6·89 kPa	1 kPa = 0·145 psi
	atmosphere (atm)	kilopascal (kPa) or megapascal (MPa)	1 atm = 101 kPa	1 MPa = 9·87 atm
	ton per square inch (ton/in^2)	megapascal (MPa)	1 ton/in^2 = 15·4 MPa	1 MPa = 0·0647 ton/in^2
	psi	kg/cm^2	1 psi-0.070 kg/cm^2	1 kg/cm^2=14.22 psi
VELOCITY	mile per hour (mph)	kilometre per hour (km/h)	1 mph = 1·61 km/h	1 km/h = 0 621 mph
	(for navigation)	knot (kn)	1 kn = 1·85 km/h	
TEMPERATURE	temperature (°F)	temperature (°C)	$°C = \frac{5}{9}(°F - 32)$	$°F = \frac{9 \times °C}{5} + 32$
DENSITY	pound per cubic inch (lb/in^3)	gram per cubic centimetre (g/cm^3) = tonne per cubic metre (t/m^3)	1 lb/in^3 = 27·7 t/m^3	1 t/m^3 = 0·0361 lb/in^3
	ton per cubic yard	tonne per cubic metre (t/m^3)	1 ton/yd^3 = 1·33 t/m^3	·1 t/m^3 = 0·752 ton/yd^3
ENERGY	British thermal unit (Btu)	kilojoule (kJ)	1 Btu = 1·06 kJ	1 kJ = 0·948 Btu
	therm	megajoule (MJ)	1 therm = 106 MJ	1 MJ = 9·48 × 10^{-3} therm
	(for electrical energy)	kilowatt hour (kWh)	1 kWh = 3·60 MJ	
POWER	horsepower (hp)	kilowatt (kW)	1 hp = 0·746 kW	1 kW = 1·34 hp
TIME		second (s)		
		minute (min)	1 min = 60 s	
		hour (h)	1 h = 3600 s	
FREQUENCY	cycle per second (c/s)	hertz (Hz)	1 c/s = 1 Hz	1 Hz = 1 c/s
ANGULAR VELOCITY	revolution per minute (rpm)	radian per second (rad/s) revolution per minute (rpm)	1 rpm = 0·105 rad/s	1 rad/s = 9·55 rpm
TORQUE	lb-ft	Nm	1 lb-ft = 1.35582 Nm	1 Nm = 0.737562 lb-ft
VACUUM	inches of mercury (in Hg)	kilopascal (kPa)	1 in Hg = 3.386 kPa	1 kPa = 0.295 in Hg

INCHES	DECIMALS	MILLI-METRES	INCHES TO MILLIMETRES		MILLIMETRES TO INCHES		FAHRENHEIT & CELSIUS E			
			Inches	m.ms.	m.ms.	Inches	°F	°C	°C	°F
1/64	.015625	.3969	.0001	.00254	0.001	.000039	-20	-28.9	-30	-22
1/32	.03125	.7937	.0002	.00508	0.002	.000079	-15	-26.1	-28	-18.4
3/64	.046875	1.1906	.0003	.00762	0.003	.000118	-10	-23.3	-26	-14.8
1/16	.0625	1.5875	.0004	.01016	0.004	.000157	-5	-20.6	-24	-11.2
5/64	.078125	1.9844	.0005	.01270	0.005	.000197	0	-17.8	-22	-7.6
3/32	.09375	2.3812	.0006	.01524	0.006	.000236	1	-17.2	-20	-4
7/64	.109375	2.7781	.0007	.01778	0.007	.000276	2	-16.7	-18	-0.4
1/8	.125	3.1750	.0008	.02032	0.008	.000315	3	-16.1	-16	3.2
9/64	.140625	3.5719	.0009	.02286	0.009	.000354	4	-15.6	-14	6.8
5/32	.15625	3.9687	.001	.0254	0.01	.00039	5	-15.0	-12	10.4
11/64	.171875	4.3656	.002	.0508	0.02	.00079	10	-12.2	-10	14
3/16	.1875	4.7625	.003	.0762	0.03	.00118	15	-9.4	-8	17.6
13/64	.203125	5.1594	.004	.1016	0.04	.00157	20	-6.7	-6	21.2
7/32	.21875	5.5562	.005	.1270	0.05	.00197	25	-3.9	-4	24.8
15/64	.234375	5.9531	.006	.1524	0.06	.00236	30	-1.1	-2	28.4
1/4	.25	6.3500	.007	.1778	0.07	.00276	35	1.7	0	32
17/64	.265625	6.7469	.008	.2032	0.08	.00315	40	4.4	2	35.6
9/32	.28125	7.1437	.009	.2286	0.09	.00354	45	7.2	4	39.2
19/64	.296875	7.5406	.01	.254	0.1	.00394	50	10.0	6	42.8
5/16	.3125	7.9375	.02	.508	0.2	.00787	55	12.8	8	46.4
21/64	.328125	8.3344	.03	.762	0.3	.01181	60	15.6	10	50
11/32	.34375	8.7312	.04	1.016	0.4	.01575	65	18.3	12	53.6
23/64	.359375	9.1281	.05	1.270	0.5	.01969	70	21.1	14	57.2
3/8	.375	9.5250	.06	1.524	0.6	.02362	75	23.9	16	60.8
25/64	.390625	9.9219	.07	1.778	0.7	.02756	80	26.7	18	64.4
13/32	.40625	10.3187	.08	2.032	0.8	.03150	85	29.4	20	68
27/64	.421875	10.7156	.09	2.286	0.9	.03543	90	32.2	22	71.6
7/16	.4375	11.1125	.1	2.54	1	.03937	95	35.0	24	75.2
29/64	.453125	11.5094	.2	5.08	2	.07874	100	37.8	26	78.8
15/32	.46875	11.9062	.3	7.62	3	.11811	105	40.6	28	82.4
31/64	.484375	12.3031	.4	10.16	4	.15748	110	43.3	30	86
1/2	.5	12.7000	.5	12.70	5	.19685	115	46.1	32	89.6
33/64	.515625	13.0969	.6	15.24	6	.23622	120	48.9	34	93.2
17/32	.53125	13.4937	.7	17.78	7	.27559	125	51.7	36	96.8
35/64	.546875	13.8906	.8	20.32	8	.31496	130	54.4	38	100.4
9/16	.5625	14.2875	.9	22.86	9	.35433	135	57.2	40	104
37/64	.578125	14.6844	1	25.4	10	.39370	140	60.0	42	107.6
19/32	.59375	15.0812	2	50.8	11	.43307	145	62.8	44	112.2
39/64	.609375	15.4781	3	76.2	12	.47244	150	65.6	46	114.8
5/8	.625	15.8750	4	101.6	13	.51181	155	68.3	48	118.4
41/64	.640625	16.2719	5	127.0	14	.55118	160	71.1	50	122
21/32	.65625	16.6687	6	152.4	15	.59055	165	73.9	52	125.6
43/64	.671875	17.0656	7	177.8	16	.62992	170	76.7	54	129.2
11/16	.6875	17.4625	8	203.2	17	.66929	175	79.4	56	132.8
45/64	.703125	17.8594	9	228.6	18	.70866	180	82.2	58	136.4
23/32	.71875	18.2562	10	254.0	19	.74803	185	85.0	60	140
47/64	.734375	18.6531	11	279.4	20	.78740	190	87.8	62	143.6
3/4	.75	19.0500	12	304.8	21	.82677	195	90.6	64	147.2
49/64	.765625	19.4469	13	330.2	22	.86614	200	93.3	66	150.8
25/32	.78125	19.8437	14	355.6	23	.90551	205	96.1	68	154.4
51/64	.796875	20.2406	15	381.0	24	.94488	210	98.9	70	158
13/16	.8125	20.6375	16	406.4	25	.98425	212	100.0	75	167
53/64	.828125	21.0344	17	431.8	26	1.07362	215	101.7	80	176
27/32	.84375	21.4312	18	457.2	27	1.06299	220	104.4	85	185
55/64	.859375	21.8281	19	482.6	28	1.10236	225	107.2	90	194
7/8	.875	22.2250	20	508.0	29	1.14173	230	110.0	95	203
57/64	.890625	22.6219	21	533.4	30	1.18110	235	112.8	100	212
29/32	.90625	23.0187	22	558.8	31	1.22047	240	115.6	105	221
59/64	.921875	23.4156	23	584.2	32	1.25984	245	118.3	110	230
15/16	.9375	23.8125	24	609.6	33	1.29921	250	121.1	115	239
61/64	.953125	24.2094	25	635.0	34	1.33858	255	123.9	120	248
31/32	.96875	24.6062	26	660.4	35	1.37795	260	126.6	125	257
63/64	.984375	25.0031	27	690.6	36	1.41732	265	129.4	130	266

ENGINE

BIG END BEARINGS — Connecting rod bearings, con-rod bearings.
CAMSHAFT SPROCKET or GEAR — Timing gear, timing wheel.
CONNECTING ROD — Con-rod.
CRANKSHAFT SPROCKET or GEAR — Timing gear, timing wheel.
CYLINDER BLOCK — Crankcase, engine block.
END FLOAT — End play, end clearance.
ENGINE — Motor.
ENGINE STEADY — Stabiliser, support.
ENGINE MOUNTING — Mounts, supports.
FLYWHEEL RING GEAR — Starter ring gear, starter driven gear.
FUEL PUMP — Petrol pump.
GUDGEON PIN — Piston pin, wrist pin, small end pin.
INLET MANIFOLD — Intake manifold, induction manifold.
INLET VALVE — Intake valve, induction valve.
MAIN BEARING — Crankshaft bearing.
OIL CONTROL RING — Scraper ring, oil ring.
OIL PUMP (Rotor type) — Inner rotor, outer rotor.
OIL PUMP (Gear type) — Drive gear, driven gear.
O-RING — Neoprene O-ring, oil seal.
POWER UNIT — Engine and gearbox.
RELIEF VALVE — Release valve.
ROCKER ARM — Rocker, tappet.
ROCKER COVER — Valve cover, tappet cover.
SCREEN (Gauze type) — Filter.
SILENCER — Muffler, expansion box.
SMALL END — Little end.
SUMP — Oil pan.
TAPPET (Hydraulic or solid) — Valve lifter, cam follower.
TIMING CHAIN TENSIONER — Chain tightener.
VALVE COTTER — Valve collet, valve keep, valve key.
WATER PUMP IMPELLER — Rotor.
WELCH PLUG — Core plug, expansion plug.

FUEL

ACCELERATOR — Throttle pedal.
ACCELERATOR PUMP — Throttle pump, carburettor pump.
AIR CLEANER — Air filter, air silencer.
BI-METAL SPRING — Thermostat spring.
CHOKE — Strangler, cold starter.
CHOKE VALVE — Choke butterfly.
COMPENSATING JET — Secondary jet.
DASHPOT — Piston damper.
FUEL PUMP — Petrol pump, lift pump.
IDLE JET — Slow running jet, low speed jet.
IDLING MIXTURE SCREW — Volume control screw, mixture control screw, mixture timing screw.
MAIN JET — Primary jet.
SECONDARY JET — Compensating jet.
THROTTLE STOP SCREW — Idling speed screw.
THROTTLE VALVE — Accelerator butterfly.
VENTURI — Choke tube.

CLUTCH

CLUTCH HOUSING — Clutch cover, clutch bell housing.
DRIVEN PLATE — Clutch plate, driven disc, clutch disc.
DRIVEN PLATE FACINGS — Driven plate linings, clutch linings, friction facings.
PRESSURE PLATE — Clutch drive plate.
PRESSURE PLATE COVER — Clutch housing, clutch cover.
RELEASE BEARING — Throw-out bearing, thrust bearing, withdrawal bearing.
RELEASE BEARING PLATE — Throw-out bearing plate, thrust plate.
RELEASE LEVER — Clutch fork, release fork, throw-out lever, withdrawal lever.
SLAVE CYLINDER — Clutch cylinder, operating cylinder, actuating cylinder.

TRANSMISSION

FIRST SPEED — Low gear, first gear, bottom gear.
GEAR SHIFT LEVER — Change speed lever, gear seletor lever, gear change lever.
INPUT SHAFT — Clutch shaft, first motion shaft, main drive shaft, primary shaft, main drive gear, spigot shaft.
LAYGEAR — Cluster gear, second motion gear, intermediate gear.
LAYSHAFT — Cluster gear shaft, second motion shaft, intermediate shaft, counter shaft.
MAINSHAFT — Third motion shaft, output shaft, secondary shaft.
NEEDLE BEARINGS — Roller bearings.
PROPELLER SHAFT — Propshaft, drive shaft, tail shaft.
REVERSE IDLER GEAR — Reverse pinion.
SELECTOR SHAFT — Selector rod, selector rail, shift rail, shift rod, shifter shaft.
SHIFT FORK — Selector fork, shifter fork.
SNAP RING — Circlip, spring clip.
SPIGOT BEARING — Pilot bearing, support bearing.
SYNCHRO HUB — Clutch hub.
SYNCHRO PLATE — Synchro bar, synchro key.
SYNCHRO RING — Baulk ring, synchro cone.
SYNCHRO SLEEVE — Clutch sleeve.
SYNCHRO SPRING — Clutch spring, energising spring.
TOP GEAR — High gear, high speed.
TRANSMISSION — Gearbox.
UNIVERSAL JOINT — Drive coupling, Hardy-Spicer joint.
UNIVERSAL JOINT CROSS — Joint trunnion.
UNIVERSAL JOINT YOKE — Universal joint fork.

REAR AXLE

AXLE SHAFT — Drive shaft, half shaft.
AXLE SHAFT BEARING — Rear wheel bearing, rear axle race, rear hub bearing.
CARRIER BEARING — Differential bearing, side bearing.
CROWNWHEEL — Ring gear, final drive gear, spiral drive gear.
DIFFERENTIAL PINION — Spider pinion, pinion gear, planet wheel.
DIFFERENTIAL SIDE GEAR — Axle shaft gear, spider gear, sun wheel.
DRIVE PINION — Final drive pinion, bevel pinion, spiral drive pinion.
PINION FLANGE — Drive coupling.

SUSPENSION/STEERING

BUMP RUBBER — Bumper, bump stop, rebound rubber.
CONTROL ARM — Wishbone, suspension arm, link, track control arm.
CONTROL ARM BALL JOINT — Upper ball joint, lower ball joint.
CONTROL ARM SHAFT — Fulcrum pin, fulcrum shaft, pivot pin.
IDLER ARM — Intermediate lever or arm.
PITMAN ARM — Steering arm, drop arm, sector shaft arm.
SECTOR SHAFT — Roller shaft, pitman arm shaft, drop arm shaft.
SHOCK ABSORBER — Damper.
STABILISER BAR — Ride stabiliser, away bar, anti-roll bar.
STEERING ARM — Knuckle arm, steering lever, pitman arm.
STEERING CONNECTING ROD — Relay rod, drag link.
STEERING GEAR — Steering gearbox, steering box, rack and pinion.
STEERING LINKAGE — Track rods, tie rods.
STEERING SHAFT — Steering column.
STUB AXLE — Swivel axle.
STUB AXLE SUPPORT — Steering knuckle support, swivel link, control arm link.
SUSPENSION STRUT — Suspension leg, MacPherson Strut.
TIE ROD BALL JOINT — Tied rod end, track rod end.
TORQUE RODS — Anti-tramp rods.
WHEEL ALIGNMENT — Toe-in, track alignment, tracking.
WISHBONE — Control arm, suspension arm.

BRAKES

BACKING PLATE — Brake plate, back plate.
FLEXIBLE BRAKE PIPE — Brake hose. flexible connector.
HANDBRAKE — Parking brake.
LININGS — Shoe facings, friction facings.
PISTON — Plunger.
PRESSURE DIFFERENTIAL VALVE AND WARNING SWITCH — Brake line pressure warning switch, hydraulic safety switch.
PRESSURE LIMITING VALVE — Brake pressure regulator, pressure reduction valve, presure conscious reducing valve.
PRIMARY CUP — Main cup, main rubber seal.
RETURN SPRING — Pull-off spring, retractor spring.
SECONDARY CUP — Piston seal.
VACUUM SERVO UNIT — Servo, power brake unit, brake booster unit.
WHEEL CYLINDER — Actuating cylinder, brake cylinder.
WHEEL CYLINDER CUP — Wheel cylinder rubber, wheel cylinder seal.

ELECTRICAL

ALTERNATOR — AC Generator.
ALTERNATOR-REGULATOR — Voltage regulator, control box.
BULB — Lamp, globe.
CAPACITOR — Condenser.
CONTACT BREAKER POINTS — Contact points, circuit breaker contacts.
COURTESY LAMP — Interior light, roof light.
DIPPER SWITCH — Dimmer switch.
DISTRIBUTOR — Timer.
FUEL GAUGE — Petrol gauge.
GENERATOR — Dynamo.
GENERATOR-REGULATOR — Voltage regulator, control box.
HARNESS — Loom.
HAZARD WARNING SYSTEM — Emergency flashers.
HEADLAMP — Head light, main light.
HIGH TENSION LEADS — Plug wires, plug leads.
HORN PUSH — Horn switch, horn button.
INSTRUMENT LAMP — Panel light.
LAMP — Light.
LENS — Glass, crystal.
MEDALLION — Name plate, cover, motif, emblem.
NUMBER PLATE LAMP — Licence plate light.
PARKING LAMP — Side light, side lamp.
ROTOR ARM — Rotor button.
STOP LAMP — Brake light.
STARTER — Starter motor.
STARTER DRIVE — Bendix gear, drive pinion.
TAIL LAMP — Rear light, tail light.
TEMPERATURE GAUGE — Heat gauge.
TURN SIGNAL LAMP — Direction indicator light, flasher light, trafficator light.
TURN SIGNAL RELAY — Flasher unit.
TURN SIGNAL SWITCH — Direction indicator switch, flasher switch, trafficator switch, indicator stalk.

VACUUM ADVANCE UNIT — Advance and retard unit, vacuum advance, vacuum capsule.
WARNING LAMP — Indicator light.
WINDSCREEN WIPER — Windshield wiper.

BODY

BONNET — Hood, engine compartment lid.
BULKHEAD — Scuttle, firewall.
BUMPERS — Bumper bar, fender.
DOOR GLASS — Door window, window glass.
FENDER — Mudguard, wing.
GLASS LIFT CHANNEL — Window lift channel.
GLASS REGULATOR — Window lift regulator, window winder.
GLASS RUN CHANNEL — Glass channel, glass runner, bailey channel.
HEADLINING — Roof lining, head cloth.
LUGGAGE COMPARTMENT — Boot.
MOULDING — Chrome strip, finishing strip.
PANEL — Skin.
REAR GLASS — Back light, rear screen, back window.
VENTILATOR GLASS — Quarter light, no draught ventilator, vent glass, quarter glass, flipper window.
WEATHERSTRIP — Weathershield, glazing channel, door belt weatherstrip.
WINDSCREEN — Windshield.

COMMON ABBREVIATIONS

AC — Alternating current.
APS — Air preheat system.
atdc — After top dead centre.
bbdc — Before bottom dead centre.
bdc — Bottom dead centre
bhp — Brake horse power
btdc — Before top dead centre
cc — Cubic centimetre.
CVJ — Constant velocity joint.
Cyl — Cylinder.
DC — Direct current.
Deg — Degrees.
EEC — Evaporative emission control.
EGR — Exhaust gas recirculation.
EP — Extreme pressure.
FWD — Front wheel drive.
HC — High compression.
HD — Heavy duty.
HT — High tension.
LC — Low compression.
LH — Left hand.
LT — Low tension.
MS — Manufacturers' specification.
OHC — Overhead camshaft.
OHV — Overhead valves.
PCV — Positive crankcase ventilation.
RH — Right hand.
rpm — Revolutions per minute.
SC — Single carburettor.
TC — Twin carburettor
TCS — Transmission control switch.
tdc — Top dead centre.
TVS — Thermal vacuum switch.
UJ — Universal joint.
VAC — Vacuum advance control.

15. Please indicate your age group:

❒ 16-19 ❒ 20-24 ❒ 25-29 ❒ 30-39 ❒ 40-49 ❒ 50-59 ❒ 60-69 ❒ 70+

16. Please indicate whether you are:

❒ Male ❒ Female

17. How did you find out this manual was available?

❒ Magazine ❒ Catalogue ❒ Television ❒ Word of Mouth

❒ Store Display ❒ Other _____

19. Please write your postcode here: ☐☐☐☐

20. Please supply name and address details for delivery of your Log Book:

_____

_____

_____

Thank you for your time.

Please post (no stamp required) or fax this form to (02) 9888 9074

1/97

PLEASE SEAL HERE

FOLDLINE

No postage stamp required
if posted in Australia

REPLY PAID 130
Gregory's Automotive Publications
PO Box 1530
Macquarie Centre NSW 2113

Gregory's AUTOMOTIVE

FOLDLINE

Service Manual Questionnaire

To receive your free Motor Vehicle Log Book, please complete the following questions and send this reply paid form to our product research department.

1. How would you describe your mechanical knowledge of motor vehicles?

❒ Home mechanic ❒ Professional motor mechanic ❒ Non technical

2. Why did you purchase this manual? (Please indicate one or more reason)

❒ General servicing ❒ To service a specific part (specify) _____
❒ Problem diagnosis ❒ In case of emergency ❒ Specifications
❒ Component test procedures ❒ Wiring diagrams ❒ Removal and installation
❒ Other (specify) _____

3. If you are a home mechanic, why do you choose to do your own servicing/repairs?

❒ Save money ❒ Hobby/enjoyment ❒ Ensure job done properly
❒ Convenience ❒ Other

4. Please indicate the number on the front cover of the manual purchased ☐☐☐

5. Is this the first time you have purchased a Gregory's manual?

FOLDLINE

❒ Yes ❒ No

FOLDLINE

6. Which of the following tasks are you likely to undertake?

Never	Unlikely	Possibly	Definitely		
❒	❒	❒	❒	**a.**	Minor Jobs – *replacing fuses, blown globes, changing tyres*
❒	❒	❒	❒	**b.**	Scheduled maintenance – *Changing oil and filters, tune-ups, checking brakes, suspension etc.*
❒	❒	❒	❒	**c.**	Minor engine work – *replacing timing belt, cylinder head or manifold gaskets*
❒	❒	❒	❒	**d.**	Major engine work – *replacing piston rings, bearings*
❒	❒	❒	❒	**e.**	EFI testing and repair (EFI models only)
❒	❒	❒	❒	**f.**	Carburettor overhaul (Carburettor models only)
❒	❒	❒	❒	**g.**	Alternator, starter motor overhaul
❒	❒	❒	❒	**h.**	Brakes – *Pad renewal*
❒	❒	❒	❒		*Component overhaul*
❒	❒	❒	❒	**i.**	Clutch – *Component replacement*
❒	❒	❒	❒	**j.**	Manual transmission overhaul
❒	❒	❒	❒	**k.**	Suspension – *Component replacement*
❒	❒	❒	❒	**l.**	Steering – *Steering box removal*
❒	❒	❒	❒		*Tie rod end replacement*
❒	❒	❒	❒	**m.**	Body – *Dashboard removal*
❒	❒	❒	❒		*Seat removal*
❒	❒	❒	❒		*Door trim removal*
❒	❒	❒	❒		*Door windows and lock removal*

FOLDLINE

FOLDLINE

8. Have you used, or do you anticipate that you will use the wiring diagrams?

❒ Yes ❒ No

If yes, for what purpose?

❒ Tracing electrical faults ❒ Fitting accessories (eg lights, alarms etc)
❒ Wiring up a trailer ❒ Other _____

9. If you were to purchase a current model vehicle (say less than 3 years old), would you still do your own servicing & repairs?

❒ Yes ❒ No **If no, why?** _____

_____

11. Would you purchase another Gregory's manual? ❒ Yes ❒ No

12. Have you any suggestions you feel would improve this product? (Please specify)

_____

_____

_____

13. Where did you purchase your service and repair manual?

❒ Auto Accessory Store ❒ K-Mart/Big W ❒ Bookstore ❒ Other _____

14. Are you the original owner of the vehicle for which this manual was obtained?

❒ Yes ❒ No

FOLDLINE

FOLDLINE

THE COMPLETE RANGE

Listed below are titles available and in production at the time this manual went to print. For up-to-date information on availability, please write to us at PO Box 1530, Macquarie Centre, NSW 2113 or call 1800 021 987.

DAIHATSU

Charade 3 & 4 cyl (1980–93)	254

FORD

Corsair (1989–92)	600*
Cortina TE 4 cyl (1977–80)	158A
Cortina TE 6 cyl (1977–80)	180A
Escort MkI (1970–75)	81
Escort MkII (1975–76)	20
Escort (1977–81)	125
Falcon XK, XL, XM, XP, XR, XT, XW 6 cyl (1960–70)	62
Falcon/Fairlane XR, XT, XW, XY/ZD 8 cyl (1966–72)	154
Falcon/Fairlane XY, XA, XB/ZD, ZF, ZG 6 cyl (1970–76)	155
Falcon/Fairlane XA, XB/ZF, ZG 8 cyl (1972–76)	156
Falcon XC 6 cyl (1976–79)	160
Falcon XC 8 cyl (1976–79)	179
Falcon XD 6 cyl (1979–82)	165A
Falcon XD 8 cyl (1979–82)	126
Fairlane/LTD ZJ/FC 6 & 8 cyl (1979–82)	206
Falcon/Fairlane XE/ZK 6 cyl (1982–84)	208
Falcon/Fairlane XF/ZL 6 cyl (1984–87)	226
Falcon Utilities & Vans XF 6 cyl (1984–93)	226
Falcon/Fairlane/LTD EA/NA/DA, EB/NC/DC Series I, 6 cyl (1988–92)	245
Falcon EB Series II, ED 6 cyl (1992–94)	262
Fairlane/LTD NC/DC Series II, 6 cyl (1992–95)	262
Falcon Longreach Utilities & Vans XG (1993–96)	262
Falcon EF, 6 cyl (1994-96)	267
Festiva (1991–94)	605*
Laser/Meteor KA, KB/GA, GB (1981–85)	197
Laser/Meteor KC/GC (1985–87)	237
Laser KE (1987–90)	251
Laser KF, KH (1990–94)	259
Maverick (Petrol) (1988–94)	509
Maverick (Diesel) (1988–94)	512
Telstar/TX5 (1983–87)	215
Telstar/TX5 (1987–92)	252

HOLDEN

Apollo JK, JL (1989–92)	256
Apollo JM, JP (1993–96)	266
Astra LB, LC (1984–87)	216
Astra LD (1987–89)	250
Barina MB, ML (1985–88)	246
Barina MF, MH (1989–93)	601*
Camira JB (1982–84)	210
Camira JD (1984–87)	230
Camira JE (1987–89)	247
Commodore VB 6 cyl (1978–80)	117
Commodore VB 8 cyl (1978–80)	124
Commodore VC 6 cyl (1980–81)	183
Commodore VC 4 cyl (1980–81)	185
Commodore VH 6 cyl (1981–84)	193
Commodore VH 4 cyl (1981–83)	207
Commodore VH, VK 8 cyl (1981–85)	209
Commodore VK 6 cyl (1984–85)	222
Commodore VL 6 cyl (1986–88)	238
Commodore VN 6 cyl (1988–91)	249
Commodore/Statesman/Caprice VN, VG, VQ, VP 8 cyl (1989–93)	258
Commodore/Statesman VP, VQ 6 cyl (1991–93)	261
Commodore/Statesman VR 6 cyl (1993–95)	265
Commodore/Statesman VS 6 cyl (1995–97)	268
Gemini TX (1975–76)	113
Gemini TC, TD (1977–79)	118
Gemini TE (1979–82)	190
Gemini TF, TG (1982–85)	214
Holden FX, FJ, FE, FC, FB, EK, EJ, EH,HD, HR (1948–68)	67
Holden HK, HT, HG 6 cyl (1968–71)	86
Holden HK, HT, HG 8 cyl (1968–71)	85
Holden HQ, HJ 6 cyl (1971–76)	146
Holden HQ, HJ 8 cyl (1971–76)	147
Holden HX, HZ 6 cyl (1976–80)	177
Holden HX, HZ 8 cyl (1976–80)	178
Holden WB Commercial 6 cyl (1980–85)	201
Jackaroo 4 cyl (Petrol) (1981–92)	603*
Nova LE, LF (1989–92)	260
Rodeo 2 & 4WD (Petrol) (1985–92)	602*
Sunbird UC (1978–80)	150
Torana LC, LJ 6 cyl (1969–74)	84
Torana LH, LX 6 cyl (1974–78)	58
Torana UC 6 cyl (1978–79)	115

HONDA

Accord (1977–81)	196
Civic 1200 (1973–76)	140

HYUNDAI

Excel (1990–94)	264

LEYLAND

Mini except Clubman (1961–71)	64
Mini (1971–78)	02

MAZDA

121 (1987–90)	605*
323 RWD (1977–85)	182
323 (1980–85)	202
323 (1985–89)	237
323 (1989–94)	259
626 RWD (1979–83)	181
626 (1983–87)	227
626 (1987–92)	252

MITSUBISHI/CHRYSLER

Colt RB, RC, RD, RE (1982–90)	229
Express L300 (Not 4WD) (1980–86)	213
Express Starwagon (Petrol, incl 4WD) (1987–94)	604*
Galant GC, GD (1974–77)	17
Lancer LA, LB (1974–79)	162
Magna TM (1985–86)	235
Magna TN (1987–89)	243
Magna TP (1989–91)	257
Magna TR, TS 4 cyl (1991–96)	263
Pajero NA, NB, NC, ND, NE, NF, NG 4 cyl (Petrol) (1983–91)	508
Pajero NH, NJ 6 cyl (Petrol) (1991–94)	510
Sigma GE (1978–80)	116A
Sigma GH, GJ (1980–83)	189
Sigma GK, GN (1984–87)	225
Valiant R, S, AP5, AP6, VC, VE, VF 6 cyl (1962–70)	78
Valiant VG, VH 6 cyl (1970–73)	52
Valiant VJ, VK 6 cyl (1973–77)	157
Valiant CL, CM 6 cyl (1976–81)	192

NISSAN/DATSUN

120Y (1974–79)	111A
160B, 180B (1972–77)	110
200B (1977–81)	175A
Bluebird Series 1 (1981–83)	191
Bluebird Series 2 (1983–85)	228
Bluebird Series 3 (1985–86)	234
Patrol MQ (Diesel) (1980–87)	500
Patrol GQ (Petrol) (1988–97)	509
Patrol GQ (Diesel) (1988–95)	512
Pintara (1986–89)	240
Pintara (1989–93)	600*
Pulsar N12 (1982–87)	216
Pulsar N13 (1987–91)	250
Skyline (1986–91)	242
Stanza (1978–83)	205
Sunny (1979–81)	195

SUBARU

Subaru 1600, 1800 (2 & 4WD) (1979–94)	501
Liberty (2 & 4WD) (1989–94)	515

SUZUKI

Swift 1.3 litre (1990–93)	601*

TOYOTA

Camry SV20/21 (1987–89)	244
Camry SV21/22 (1989–92)	256
Camry SDV10 (1993–96)	266
Corolla 1200 (1970–78)	122A
Corolla KE55 1300 (1978–81)	184
Corolla KE70 1300 (1981–84)	221
Corolla (1985–89)	239
Corolla (1989–92)	260
Corona 2000 (July 76–Oct 79)	127
Corona 1892 (1979–80)	188
Corona XT130 (1981–83)	233
Corona ST141 (1983–87)	223
Hi-Ace RH 2000 (Petrol) (1977–83)	203
Hi-Ace YH (Petrol) (1983–89)	248
Hi-Ace LH (Diesel) (1983–89)	255
Hi-Lux 4WD/4 Runner (Diesel) (1981–89)	503
Hi-Lux 4WD/4 Runner (Petrol) (1979–89)	506
Hi-Lux 2 & 4WD (Diesel) (1988–95)	514
Hi-Lux 2 & 4WD (Petrol) (1988–96)	516
Landcruiser FJ Series (Petrol) (1975–84)	511
Landcruiser FJ Series (Petrol) (1985–90)	507
Landcruiser HJ Series (Diesel) (1980–90)	502
Landcruiser (Diesel) (1990–Feb 95)	513
Landcruiser (Petrol) (1992–96)	517
Lexcen VN 6 cyl (1988–91)	249
Lexcen VP 6 cyl (1991–93)	261
Lexcen VR 6 cyl (1993–95)	265
Lexcen VS (1995–97)	268
Tarago (1983–90)	241

VOLKSWAGEN

Beetle (1954–71)	46
Superbug (1971–75)	45
Commercial 1700, 1800, 2000 (1973–81)	151A

OTHER TITLES

4 Wheel Drive — Going Bush	427
4WD Mechanic	428
ACL Engine Manual	413
Automotive Electrics and Electronics	415
Automotive Mechanics Fundamentals	407
Automotive Mechanics Service, Repair, Diagnosis	408
Automotive Wiring Diagrams Volume 1	429
Automotive Wiring Diagrams Volume 2	430
Car Body Repairs	401
EFI and Engine Management Volume 1	451
EFI and Engine Management Volume 2	452
EFI and Engine Management Volume 3	453
Home Mechanic	405
Inside Your Car	414
Massey Ferguson TE20–FE35	187
Motor Vehicle Log Book	417
Rover Rotary Mowers	422
Small Engines Series 1	199
Small Engines Series 2	426
Spray Painting	419
Victa Rotary Mowers	424

** AUTOFIX Manual*

1/97

The best books on four wheels...

Gregory's Scientific Publications have been established as automotive technical book publishers for nearly 40 years.

Gregory's Auto Service Manuals are written and published in Australia to cover the major makes and models listed below.

The manuals are written by automotive engineers and aimed at the practically-minded car owner who wishes to maintain his or her vehicle in a safe, reliable condition and, at the same time, reduce running and maintenance costs.

From a simple adjustment right through to a complex overhaul, Gregory's show the way.

The production of this manual began at our Research Centre. Here, a vehicle of the type covered by this manual was progressively dismantled and then reassembled as the service and repair operations were proven in practice.

Gregory's team of automotive technical writers then set about writing the step-by-step procedures for the removal and installation of components and, where applicable, detailed instructions for their testing, overhaul and adjustment.

To ensure that the reader can readily identify the components and operations described in the text, detailed photographs and line drawings were produced during the workshop research for inclusion throughout this manual.

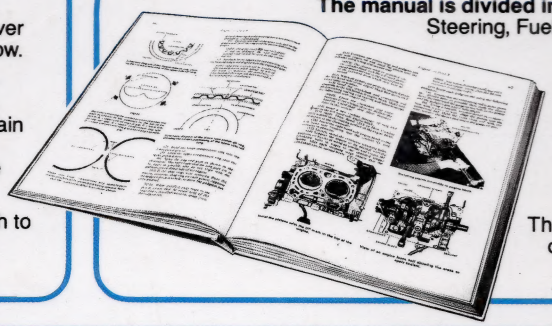

The manual is divided into sections including Engine, Cooling System, Brakes, Steering, Fuel System, Emission Control, Electrical System, etcetera. Each section contains comprehensive specifications.

Particular emphasis is placed on the value of trouble shooting, as identification of the trouble source can, on occasions, be more of a problem than the cure itself.

A Gregory's Manual will bring within the scope of most readers numerous tasks on the vehicle which can be tackled with confidence.

The cost of this manual may well be recovered on the first occasion it is put to use and the personal satisfaction of a job well done is the inevitable bonus.

Listed below are titles available and in production at the time this manual went to print. For up-to-date information on availability, please write to us at PO Box 1530, Macquarie Centre, NSW 2113 or call (02) 857 3700.

	Book No.
DAIHATSU	
Charade 3 & 4 cyl (1980–93)	254
FORD	
Corsair (1989–92)	600 †
Cortina TD 4 & 6 cyl (1974–77)	306 *
Cortina TE 4 cyl (1977–80)	158 A
Cortina TE 6 cyl (1977–80)	180 A
Cortina TF 4 cyl (1980–82)	194.
Cortina TF 6 cyl (1980–82)	198
Escort MkI (1970–75)	81
Escort MkII (1975–76)	20
Escort (1977–81)	125
Falcon XK, XL, XM, XP, XR, XT, XW 6 cyl (1960–70)	62
Falcon/Fairlane XR, XT, XW, XY/ZD 8 cyl (1966–72)	154
Falcon/Fairlane XY, XA, XB/ZD, ZF, ZG 6 cyl (1970–76)	155
Falcon/Fairlane XA, XB/ZF, ZG 8 cyl (1972–76)	156
Falcon XC 6 cyl (1976–79)	160
Falcon XC 8 cyl (1976–79)	179
Falcon XD 6 cyl (1979–82)	165 A
Falcon XD 8 cyl (1979–82)	126
Fairlane/LTD ZJ/FC 6 & 8 cyl (1979–82)	206
Falcon/Fairlane XE/ZK 6 cyl (1982–84)	208
Falcon/Fairlane XF/ZL 6 cyl (1984–87)	226
Falcon Utilities & Vans XF 6 cyl (1984–93)	226
Falcon/Fairlane/LTD EA/NA/DA, EB/NC/DC Series I, 6 cyl (1988–92)	245
Falcon/Fairlane/LTD EB/NC/DC Series II, 6 cyl (1992–93)	262
Festiva (1991–94)	605 †
Laser/Meteor KA, KB/GA, GB (1981–85)	197
Laser/Meteor KC/GC (1985–87)	237
Laser KE (1987–90)	251
Laser KF, KH (1990–92)	259
Maverick – Petrol (1988–95)	509
Maverick – Diesel (1988–95)	512
Telstar/TX5 (1983–87)	215
Telstar/TX5 (1987–90)	252

ISBN 0-85566-531-9

9 780855 665319

	Book No.
HOLDEN	
Apollo JK, JL (1989–92)	256
Apollo JM, JP (1993–96)	266
Astra LB, LC (1984–87)	216
Astra LD (1987–89)	250
Barina MB, ML (1985–88)	246
Barina MF, MH (1989–93)	601 †
Camira JB (1982–84)	210
Camira JD (1984–87)	230
Camira JE (1987–89)	247
Commodore VB 6 cyl (1978–80)	117
Commodore VB 8 cyl (1978–80)	124
Commodore VC 6 cyl (1980–81)	183
Commodore VC 4 cyl (1980–81)	185
Commodore VH 6 cyl (1981–84)	193
Commodore VH 4 cyl (1981–83)	207
Commodore VH, VK 8 cyl (1981–85)	209
Commodore VK 6 cyl (1984–85)	222
Commodore VL 6 cyl (1986–88)	238
Commodore VN 6 cyl (1988–91)	249
Commodore/Statesman/Caprice VN, VG, VQ 8 cyl (1989–91)	258
Commodore/Statesman VP, VQ 6 cyl (1991–93)	261
Commodore/Statesman VR 6 cyl (1993–95)	265
Gemini TX (1975–76)	113
Gemini TC, TD (1977–79)	118
Gemini TE (1979–82)	190
Gemini TF, TG (1982–85)	214
Holden FX, FJ, FE, FC, FB, EK, EJ, EH, HD, HR (1948–68)	67
Holden HK, HT, HG 6 cyl (1968–71)	86
Holden HK, HT, HG 8 cyl (1968–71)	85
Holden HQ, HJ 6 cyl (1971–76)	146
Holden HQ, HJ 8 cyl (1971–76)	147
Holden HX, HZ 6 cyl (1976–80)	177
Holden HX, HZ 8 cyl (1976–80)	178
Holden WB Commercial 6 cyl (1980–85)	201
Jackaroo 4 cyl – Petrol (1981–92)	603 †
Nova LE, LF (1989–92)	260
Rodeo 2 & 4WD – Petrol (1985–92)	602 †
Sunbird UC (1978–80)	150
Torana LC, LT, TA 1600, 1760 (1971–75)	145
Torana LC, LJ 6 cyl (1969–74)	84
Torana/Sunbird LH, LX 4 cyl (1974–78)	16
Torana LH, LX 6 cyl (1974–78)	58
Torana UC 6 cyl (1978–79)	115
HONDA	
Accord (1977–81)	196
Civic 1200 (1973–76)	140
HYUNDAI	
Excel (1990–94)	264
LEYLAND	
Mini except Clubman (1961–71)	64
Mini (1971–78)	02
Moke (1971–82)	02

	Book No.
MAZDA	
1000, 1300 (1967–73)	92
121 (1987–90)	605 †
323 RWD (1977–85)	182
323 (1980–85)	202
323 (1985–89)	237
323 (1989–92)	259
626 RWD (1979–83)	181
626 (1983–87)	227
626 (1987–90)	252
MITSUBISHI/CHRYSLER	
Colt RB, RC, RD, RE (1982–90)	229
Express L300 – Not 4WD (1980–86)	213
Express Starwagon – Petrol, incl 4WD (1987–94)	604 †
Galant GC, GD (1974–77)	17
Lancer LA, LB (1974–79)	162
Magna TM (1985–87)	235
Magna TN (1987–89)	243
Magna TP (1989–91)	257
Magna TR 4 cyl (1991–93)	263
Pajero NA, NB, NC, ND, NE, NF, NG 4 cyl – Petrol (1983–91)	508
Pajero NH, NJ 6 cyl – Petrol (1991-94)	510
Sigma GE (1978–80)	116 A
Sigma GH, GJ (1980–83)	189
Sigma GK, GN (1984–87)	225
Valiant R, S, AP5, AP6, VC, VE, VF 6 cyl (1962–70)	78
Valiant VG, VH 6 cyl (1970–73)	52
Valiant VJ, VK 6 cyl (1973–77)	157
Valiant CL, CM 6 cyl (1976–81)	192
NISSAN/DATSUN	
1000, 1200 (1967–74)	87
1300, 1400, 1600 (1968–72)	88
120Y (1974–79)	111 A
160B, 180B (1972–77)	110
200B (1977–81)	175 A
Bluebird Series 1 (1981–83)	191
Bluebird Series 2 (1983–85)	228
Bluebird Series 3 (1985-86)	234
Patrol MQ – Diesel (1980–87)	500
Patrol GQ – Petrol (1988–95)	509
Patrol GQ – Diesel (1988–95)	512
Pintara (1986–89)	240
Pintara (1989–93)	600 †
Pulsar N12 (1982–87)	216
Pulsar N13 (1987–91)	250
Skyline (1986–91)	242
Stanza (1978–83)	205
Sunny (1979–81)	195
SUBARU	
Subaru 1600, 1800 – 2 & 4WD (1979–94)	501
Liberty – 2 & 4WD (1989–94)	515
SUZUKI	
Swift 1.3 litre (1990-93)	601 †

	Book No.
TOYOTA	
Camry SV20/21 (1987–89)	244
Camry SV21/22 (1989–92)	256
Camry SDV10 (1993–96)	266
Corolla 1200 (1970–78)	122 A
Corolla KE55 1300 (1978–81)	184
Corolla KE70 1300 (1981–84)	221
Corolla (1985–89)	239
Corolla (1989–92)	260
Corona 1800, 2000 (1974–76)	120
Corona 2000 (July 76–Oct 79)	127
Corona 1892 (1979–80)	188
Corona XT130 (1981–83)	233
Corona ST141 (1983–87)	223
Hi-Ace RH 2000 – Petrol (1977–83)	203
Hi-Ace YH – Petrol (1983–89)	248
Hi-Ace LH – Diesel (1983–89)	255
Hi-Lux 4WD/4 Runner – Diesel (1981–89)	503
Hi-Lux 4WD/4 Runner – Petrol (1979–89)	506
Hi-Lux 2 & 4WD – Diesel (1988–95)	514
Landcruiser FJ Series – Petrol (1975–84)	511
Landcruiser FJ Series – Petrol (1985–90)	507
Landcruiser HJ Series – Diesel (1980–90)	502
Landcruiser – Diesel (1990–95)	513
Lexcen VN 6 cyl (1988–91)	249
Lexcen VP 6 cyl (1991–92)	261
Lexcen VR 6 cyl (1993–95)	265
Tarago (1983–90)	241
VOLKSWAGEN	
Beetle (1954–71)	46
Superbug (1971–75)	45
Transporter (1954–72)	48
Commercial 1700, 1800, 2000 (1973–81)	151 A
OTHER TITLES	
4 Wheel Drive — Going Bush	427
ACL Engine Manual	413
Automotive Electrics and Electronics	415
Automotive Mechanics Fundamentals	407
Automotive Mechanics Service, Diagnosis, Repair	408
Automotive Wiring Diagrams	429
Car Body Repairs	401
EFI and Engine Management Volume 1	451
EFI and Engine Management Volume 2	452
EFI and Engine Management Volume 3	453
Home Mechanic	405
Inside Your Car	414
Massey Ferguson TE20–FE35	187
Motor Vehicle Log Book	417
Rover Rotary Mowers	422
Small Engines – Series 1	199
Small Engines – Series 2	426
Spray Painting	419
Victa Rotary Mowers	424

**** Service and Maintenance Manual*** ***† AUTOFIX Manual***

(1/96)